A

Temperature Controller

Table of contents ---------- 2

Table of contents

■ Programmable temperature / Humidity controller

Model	TH500	TH300
Appearance (㎜)	 183(W)×144(H)	 96(W)×96(H)
Function	Touch panel, 100 patterns (2000 segments), 100 segments / 1 pattern setting,	
	Digital input (DI: 8 contacts) Output (DO) : max 20, RS232/485	Contact input (DI: 4 contacts) Output (DO) : max 12, RS232/485
Power supply voltage	100 – 240 V AC (voltage regulation: ±10 %), 50 – 60 Hz	
Display accuracy	Temperature (℃) : ±0.1 % of FS Humidity (%RH) : ±2 % of FS	Temperature (℃) : ±0.2 % of FS Humidity (%RH) : ±2 % of FS
Input type	Temperature: Resistance temperature detect RTD(PT100 Ω), DC voltage (0 – 5 V) Humidity: Resistance temperature detect (PT100 Ω), DC voltage (0 – 5 V)	
Output type	Control output : SSR, 4 – 20 ㎃ DC, Retransmission output : 4 – 20 ㎃ DC	
Control type	PID control	
Page	14	22

■ Programmable temperature controller

Model	TD500
Appearance (㎜)	 183(W)×144(H)
Function	Touch panel, 2 channels, 100 patterns (2400 segments), RS232/485
Power supply voltage	100 – 240 V AC (Voltage fluctuation ±10 %), 50 – 60 ㎐
Display accuracy	±0.1 % of FS ±1 Digit. (Refer to input type and range chart for exceptions)
Input type	Thermocouple (K, J, E, T, R, S), Resistance temperature detect (Pt100 Ω)
	DC voltage (1 – 5 V, 1 – 10 V)
Output type	Relay, SSR, 4 – 20 ㎃ DC
Control type	PID control / ON-OFF control
Page	27

■ Programmable temperature controller

Model	NP200	NP100
Appearance (㎜)	 96(W)×96(H)	 96(W)×96(H)
Function	99 segments / 1 pattern setting 30 pattern (300 segments), RS232/485	10 segments / 1 pattern setting 2 pattern (20 segments), RS232/485
Power supply voltage	100 – 240 V AC (voltage fluctuation ±10 %), 50 – 60 Hz	
Display accuracy	±0.1 % of FS ±1 Digit (But, please refer to input type and range chart for exceptions)	
Input type	Multi input, Thermocouple (K, J, E, T, R, B, S, L, N, U, W, PL2), RTD(Pt100 Ω), DC voltage(3 more types other than 1 – 5 V)	
Output type	Relay, SSR, 4 – 20 ㎃ DC	
Control type	PID control / ON-OFF control	
Page	35	41

■ Multi input / output digital temperature controller

Model	HX2	HX3	HX4	HX7	HX9
Appearance (㎜)	 48(W)×96(H)	 96(W)×48(H)	 48(W)×48(H)	 72(W)×72(H)	 96(W)×96(H)
Function	Sampling time : 100 ㎳, LBA, Direct action/ Reverse action				
Power supply voltage	100 – 240 V AC 50/60 Hz				
Display accuracy	±0.5 % of FS ±1 Digit Thermocouple (K, J, E, T, R, B, S, L, U, W, PL2) ±1.0 % of FS ±1 Digit Thermocouple (N) ±0.5 % of FS ±1 Digit RTD (KPt100 Ω, Pt100 Ω), DC voltage				
Input type	Multi input, Thermocouple (K, J, E, T, R, B, S, L, N, U, W, PL2), RTD (Pt100 Ω(IEC), KPt100 Ω(KS)), DC voltage (1 – 5 V DC, 0 – 100 mV), DC current 4 – 20 mA (250 Ω external resistance)				
Output type	Multi output, Relay / SSR / SSR / 4 – 20 ㎃ DC				
Control type	PID control / ON-OFF control				
Page	46				

■ Multi input / output digital temperature controller

Model	AX2	AX3	AX4	AX7	AX9
Appearance					
(㎜)	48(W)×96(H)	96(W)×48(H)	48(W)×48(H)	72(W)×72(H)	96(W)×96(H)
Function	Sampling time : 100 ㎳, LBA, Direct action/ Reverse action				
Power supply voltage	100 – 240 V AC (voltage fluctuation ±10 %), 50 – 60 ㎐				
Display accuracy	High accuracy (±0.3% of FS)				
Input type	Multi input, Thermocouple (K, J, IEC584-1), RTD (Pt100Ω, IEC751)				
Output type	Relay, SSR, 4 – 20 ㎃ DC				
Control type	PID control, Proportional control / ON-OFF control				
Page	60				

■ Multi input / output digital temperature controller

Model	PX9	PX7
Appearance		
(㎜)	96(W)×96(H)	72(W)×72(H)
Function	Sampling time : 250 ㎳, RS 485/422, Retransmission output, External contact input, Heating / Cooling control, 10 segments (Program)	
Power supply voltage	100 – 240 V AC (voltage fluctuation ±10 %), 50 – 60 ㎐	
Display accuracy	High accuracy ±0.1 % of FS ±1 Digit	
Input type	Multi input, Thermocouple (K, J, E, T, R, B, S, L, N, U, W, PL2), RTD (Pt100 Ω), DC voltage (2 more types other than 1 – 5V)	
Output type	Relay / SSR / 4 – 20 ㎃ DC	
Control type	PID control / ON-OFF control	
Page	73	

■ Multi input / output digital temperature controller

Model	NX9	NX7	NX2	NX3
Appearance				
(㎜)	96(W)×96(H)	72(W)×72(H)	48(W)×96(H)	96(W)×48(H)
Function	Sampling time : 250 ㎳, RS485/422, Retransmission output, External contact input, Heating / Cooling control			
Power supply voltage	100 – 240 V AC (voltage fluctuation ±10 %), 50 – 60 Hz			
Display accuracy	0.5 % of FS			
Input type	Multi input, Thermocouple (K, J, E, T, R, B, S, L, N, U, W, PL2), RTD (Pt100 Ω), DC voltage (2 more types other than 1–5V)			
Output type	Multi output, Relay / SSR / 4 – 20 ㎃ DC			
Control type	PID control / ON–OFF control			
Page	80			

■ Multi input / output digital temperature controller

Model	NX4	NX1	UX100
Appearance			
(㎜)	48(W)×48(H)	48(W)×24(H)	48(W)×24(H)
Function	Sampling time : 250 ㎳, RS485, Retransmission output, External contact input, Heating / Cooling control ※ Selectable by the suffix code		
Power supply voltage	100 – 240 V AC (voltage fluctuation ±10 %), 50 – 60 Hz		
Display accuracy	Multi input/output, High accuracy (0.5 % of FS)		
Input type	Thermocouple (K, J, E, T, R, B, S, L, N, U, W, PL2), RTD (Pt100 Ω), DC voltage (2 more types other than 1–5V)		
Output type	Multi output (Refer to Suffix code), Relay, SSR, 4 – 20 ㎃ DC		
Control type	PID control (3 groups) / ON–OFF control		
Page	89	97	102

■ Digital temperature controller

Model	KX9N	KX7N	KX2N	KX3N	KX4N
Appearance					
(㎜)	96(W)×96(H)	72(W)×72(H)	48(W)×96(H)	96(W)×48(H)	48(W)×48(H)
Function	Sampling time : 250 ㎳, Retransmission output				
Power supply voltage	100 – 240 V AC (voltage fluctuation ±10 %), 50 – 60 ㎐				
Display accuracy	High accuracy (0.5% of FS)				
Input type	Multi input, Thermocouple (K, J, E, T, R, B, S, L, N, U, W, PL2), RTD (Pt100 Ω), DC voltage (2 more types other than 1 – 5 V)				
Output type	Relay, SSR, 4 – 20 ㎃ DC				
Control type	PID control / ON–OFF control				
Page	107				

■ Digital temperature controller

Model	DX9	DX7	DX2	DX3	DX4
Appearance					
(㎜)	96(W)×96(H)	72(W)×72(H)	48(W)×96(H)	96(W)×48(H)	48(W)×48(H)
Function	Sampling time : 250 ㎳, Decimal points selectable, Retransmission output, Alarm output, LBA function				
Power supply voltage	100 – 240 V AC (voltage fluctuation : ±10 %), 50 – 60 ㎐				
Display accuracy	0.5 % of FS				
Input type	Thermocouple (R, K, J), RTD (Pt100 Ω / KPt100 Ω), DC voltage (1 – 5 V DC) ※ Input selectable by suffix code				
Output type	Relay, SSR, 4 – 20 ㎃ DC				
Control type	PID control / ON–OFF control				
Page	116				

■ Multi-channel temperature controller

Model	MC9	SM100
Appearance (㎜)	 96(W)×96(H)	 200(W)×283(H)
Function	4 channels /8 channels input, Heating / Cooling control RS485/422, RS232	12, 16, 20 channel board layer type setting and monitoring by RS485/422 communication
Power supply voltage	100 – 240 V AC, 50 – 60 ㎐	
Display accuracy	±0.3 % of FS ± 1 Digit	±0.5 % of FS (※ Max Range ±0.5 %)
Input type	Thermocouple (12 types), RTD (2 types), DC voltage (3 types), by suffix code	Thermocouple K types RTD Pt100 Ω, by suffix code
Output type	Relay, SSR, TRIAC, DC current	SSR voltage pulse output (12 V DC)
Page	127	135

■ Digital temperature controller

model	KF9	KF2	KF7	KF4
Appearance (㎜)	 96(W)×96(H)	 48(W)×96(H)	 72(W)×72(H)	 48(W)×48(H)
Function	Temperature setting by digital switch			
Power supply voltage	100 – 240 V AC (voltage fluctuation ±10 %), 50 – 60 ㎐			
Display accuracy	±1 % of FS ±1 Digit			
Input type	Thermocouple (R,K,J), RTD (Pt100 Ω), DC current (4 – 20 ㎃ DC), DC voltage (1 – 5 V DC), by suffix code			
Output type	Relay, SSR, 4 – 20 ㎃ DC			
Control type	Proportional control, ON/OFF control			
page	139			

■ Indicator

model	KF4-O	KF7-O	KF9-O
Appearance (㎜)	 48(W)×48(H)	 72(W)×72(H)	 96(W)×96(H)
Function	Display only		
Power supply voltage	100 – 240 V AC (voltage fluctuation ±10 %), 50 – 60 ㎐		
Display accuracy	±1.0 % of FS		
Input type	Thermocouple (K, J, R), RTD (Pt100 Ω), DC current (4 – 20 ㎃ DC), DC voltage (1 – 5 V DC), by suffix code		
Font size	7.5 × 9.8 ㎜	7.5 × 11 ㎜	8.1 × 14.2 ㎜
page	139		

■ Digital temperature controller

Model	HY-8000S	HY-8200S	HY-72D	HY-48D
Appearance (㎜)	 96(W)×96(H)	 96(W)×96(H)	 72(W)×72(H)	 48(W)×48(H)
Function	Temperature setting by the digital switch HY-48D : 220/110 V AC selectable by internal deep switch (default value 220 V AC)			
Power supply voltage	110/220 V AC (voltage fluctuation ±10 %), 50/60 ㎐ (Dual usage)			
Display accuracy	±1 % of FS ± 1 Digit			
Input type	Thermocouple : R, K, J RTD : Pt100 Ω. DC voltage : 1 – 5 V DC (4 – 20 ㎃ DC), by suffix code			
Output type	Relay, SSR, 4 – 20 ㎃ DC			
Control type	Proportional control, ON/OFF control			
Auxiliary output	–	Relay	–	
page	144			

■ Digital temperature controller

Model	DF2	DF2 (SUB)	DF4 (Socket type)
Appearance (㎜)	 48(W)×96(H)	 48(W)×96(H)	 48(W)×48(H)
Function	DF2 : control output DF2 (alarm output type) : control output + alarm output (SUB)		
Power supply voltage	110 V / 220 V AC 50/60 ㎐ (Dual usage)		110 V / 220 V AC separate
Display accuracy	±1 % of FS ± 1 Digit		
Input type	Thermocouple (K), RTD (Pt100 Ω), by suffix code		
Output type	Relay, SSR, 4 – 20 ㎃		
Auxiliary output	–	Relay (SUB)	–
Control type	Proportional control, ON/OFF control		
page	149		

■ Digital temperature controller

Model	BR6	ED6	HD6	RS6
Appearance (㎜)	 77(W)×35(H)	 77(W)×35(H)	 77(W)×35(H)	 72(W)×36(H)
Function	Defrost timer, alarm function, heating/cooling		Recommendable for vinyl greenhouse	heating/cooling selectable, for refrigerating machine control
Power supply voltage	10 – 24 V DC/AC 50 – 60 ㎐ 100 – 240 V DC/AC 50 – 60 ㎐		100 – 240 V AC 50 – 60 ㎐	12 V AC
Input type	Exclusive sensor TH540D / TH540N	Thermocouple : K RTD : Pt100 Ω	Exclusive sensor TH540D / TH540N	Thermocouple(K), RTD(Pt100 Ω) Exclusive sensor(PTC)
Display accuracy	±1 % of FS		±1 % of FS	±1 % of FS
Output type	Control output : Relay or SSR Alarm : Relay		OPEN : Relay CLOSE : Relay	Control : Relay/SSR Alarm : Relay
Control type	Proportional control, ON/OFF control		ON/OFF control	
page	154	158	162	166

■ Indicator

Model	TP3	BK6-M	HN100
Appearance (㎜)	 96(W)×48(H)	 72(W)×36(H)	 270(W)×166(H)
Function	5 channel inputs	Multi input, Retransmission output	IP57 Protective structure
Power supply voltage	100 – 240 V AC 50 – 60 Hz		12 V DC
Input type	Thermocouple (K, J), RTD (Pt100 Ω)	Multi input (19 kinds), Thermocouple, RTD	RTD (Pt100 Ω), 4 – 20 ㎃ DC (0 ~ 100)
Display accuracy	±0.5 % of FS	±0.5 % of FS	±0.5 % of FS
Font size	8.1 × 14.2 ㎜	8 × 13 ㎜	34 X 56 ㎜
page	169	171	175

■ Indicator

Model	AT6	AT3	BK3
Appearance (㎜)	 72(W)×36(H)×94(D)	 96(W)×48(H)×100(D)	 96(W)×48(H)×100(D)
Function	Display only		
Power supply voltage	100 – 240 V AC 50 – 60 Hz	110/220 V AC (voltage fluctuation ±10 %), 50/60 Hz	
Input type	Thermocouple (K, J, R), RTD (Pt100 Ω)		Thermocouple (K, J, R), RTD (Pt100 Ω), DC current (4 – 20 ㎃), DC voltage (1 – 5 V DC)
Display accuracy	±0.5 % of FS		
Font size	11 ㎜	14.2 ㎜	20.0 ㎜
page	177	180	182

■ Analog temperature controller

Model	HY-5000	HY-4500S	HY-4700S
Appearance (㎜)	 72(W)×72(H)	 96(W)×96(H)	 96(W)×96(H)
Function	Analog indication, analog setting	Analog indication, analog setting	Analog indication, analog setting
Power supply voltage	110/220V AC (voltage fluctuation ±10 %), 60 Hz		
Input type	Thermocouple (K), RTD (Pt100 Ω)	Thermocouple (K, J, R), RTD (Pt100 Ω)	Thermocouple (K, J, R), RTD (Pt100 Ω)
Display accuracy	±2.0 % of FS		
Control type	Proportional control, ON/OFF control		
Control output	Relay output, Current output, SSR output		
Auxiliary output	–		Relay (SUB)
page	185		

■ Analog temperature controller

Model	HY-3000	AF1	AF1 (SUB)
Appearance (㎜)	 96(W)×96(H)	 48(W)×96(H)	 48(W)×96(H)
Function	Deviation indication		
Power supply voltage	110/220V AC (voltage fluctuation ±10 %), 60 Hz		
Input type	Thermocouple (K), RTD (Pt100 Ω)		
Display accuracy	±2.0 % of FS		
Control type	Proportional control, ON/OFF control		
Control output	Relay output, Current output, SSR output		
Auxiliary output	–		Relay (SUB)
page	189		

■ Analog temperature controller

Model	HY-1000	HY-2000	ND4
Appearance (㎜)	 72(W)×72(H)	 96(W)×96(H)	 48(W)×48(H)
Function	Simple setting type		Analog setting (8 pin socket)
Power supply voltage	110/220V AC (voltage fluctuation ±10 %), 60 Hz		
Input type	Thermocouple (K, J), RTD (Pt100 Ω)		
Display accuracy	–		
Control type	Proportional control, ON/OFF control		
Control output	Relay output		
page	193		

■ Others

Model	D55	CV300	FS-3A
Appearance (㎜)	 71(W)×158(H)		
Function	Contact type : Thermocouple (K, J)	RS232 vs RS485/422 signal conversion	Level detection
Power supply voltage	9 V DC (Battery : 6F22, 006P)	9 V DC 300 ㎃ adaptor (1.3 V DC jack)	220 V AC 50/60 Hz
Input type	K,J	RS232, RS485/422	Electrode
Display accuracy	Thermocouple(K) : ±0.5 % of indicated value +0.7 ℃ Thermocouple(J) : ±0.5 %of indicated value +0.8 ℃	–	–
Setting	Auto indication (T1, T2 temp indication and T1, T2) Max or min indication, hold function	2 wire/4 wire type, half duplex/full duplex, select whether to use termination resistor or not	By installation of electrode
page	197	199	203

■ Others

Model	CV250	EM310
Appearance (㎜)	 38.5(W)×80.8(H)	 72(W)×36(H)
Function	Temperature / humidity converter	Data storage device
Power supply voltage	100 – 240 V AC 50 – 60 Hz	24 V DC 500 ㎃
Input type	Wet / dry sensor RTD (Pt100 Ω)	Communication type : asynchronous type serial communication (RS232C)
Output accuracy	Temperature : ±0.5 % of FS Humidity : ±1.0 % of FS	–
Display accuracy	–	–
page	205	207

TH500

Programmable temperature&humidity controller

- Color LCD screen with touch panel function
- Precise control
- 100 patterns (Total 2000 segments)
- Temperature&humidity independent PID control
- Various alarm functions
- Digital input 8 contacts, digital output 20 contacts
- Communication function (RS232, RS422 / 485)

Suffix code

Model	Code			Description	
TH500	□	□	□	Programmable temperature & humidity controller	
Types	1			Standard type	Temperature & Humidity Retransmission output Temperature & Humidity control output (SSR/SCR drive) Temperature & Humidity signal input External digital input (DI) : 8 contacts Digital output (DO) : relay 12 contacts, open collector 8 contacts Communication specification : RS232, RS422/485, USB
	2			Additional type	※ Input and output boards are separated from the main body. Temperature / Humidity Retransmission output Temperature / Humidity signal input Communication specification: RS232, RS422/485 2CH, USB (PV Backup)
	N			–	No body part
Additional type board (optional)		1		Input/Output board-1 (12 contacts relay output), Temperature/Humidity control output (SSR/SCR drive) (DI : 8 contacts, DO : 12 contacts relay output external power supply) 24 V DC, 18 W	
		2		Input/Output board-2 (8 contacts open collector output external terminal board)	
		3		Input/Output board-3 (8 contacts relay output board)	
		4		Input/Output board-1 + (output board-2)	
		5		Input/Output board-1 + (output board-3)	
		N		No output board (when selected the main body)	
Language			N	Korean / English (Standard type)	
			2	English / Chinese (Simplified Chinese Characters)	
			3	English / Chinese (Traditional Chinese Characters)	
			4	Korean / Chinese (Simplified Chinese Characters)	
			5	Korean / Chinese (Traditional Chinese Characters)	

Specification

Input

Temperature sensor (Dry)	RTD (Pt100 Ω) or 0 – 5 V DC * 4 – 20 mA DC (External resistance 250 Ω) * Pt100 Ω at 0 ℃ (IEC 751)
Humidity sensor (Wet)	
Sampling time	500 ㎳
Measurement range	Temperature range : –100.00 ~ 200.00 ℃
	Humidity range : 0.00 ~ 100.00 % RH
Digital Input (DI)	Total 8 contacts (1a 4 contacts x 2), 8 V DC 10 mA max
Allowable wiring resistance	Less than 10 Ω / 1 wire (Resistance value of 3 wires must be same)
Input impedance	Approx. 1 ㏁ (DC voltage input)
Allowable signal source resistance	Approx. less than 2 ㎏ (DC voltage input)
Input displaying resolving power	Generally less than the decimal point of range

Performance

Display accuracy	Temperature (℃) : ±0.1 % of FS Humidity (%RH) : ±2 % of FS
Insulation resistance	Above 20 ㏁, 500 V DC (Primary terminal–secondary terminal–between the earths)
Dielectric strength	2500 V AC, 60 Hz, For 1 minute (Primary terminal–secondary terminal–between the earth terminals)

Standard specification

Power supply voltage	100 – 240 V AC 50 – 60 Hz
Percentage of voltage fluctuation	±10 % of power supply voltage
Power consumption	20 VA
Ambient temperature	0 ~ 50 ℃
Ambient humidity	20 ~ 90 % RH (Under the condition of no dew formed)
Storage temperature	–25 ℃ ~ 70 ℃
Vibration resistance	10 – 55 Hz, Amplitude 0.75 ㎜, 3 direction, 4 times, 5 min/cycle
Shock resistance	147 ㎧, To the direction of 3 for 3 times
Dimension	183(W) × 144(H) × 94(D)
Weight	Approx. 2.35kg (Included the weight of box)

Control function

Input	Input compensation (sensor bias)	temperature 1 contact : −100.00 ~ +100.00 ℃ humidity 1 contact : −100.00 ~ +100.00 % RH
	Wet/dry sensor compensation	Remove the gauze from wet bulb sensor and compensate the difference between the wet and dry bulb sensor.
	Scaling	DC voltage (V DC) : input scaling depending on the conversion range.
	Input filter (LPF)	2 ~ 180 sec
	Detecting input break	Up scale, Stop operating when exceeded ±5 % of range limit
Control mode	Operation method selection	fixed control/Select programmable control
Control output	Temperature control output	SSR output or SCR (4 – 20 ㎃ DC) output selection
	Humidity control output	
Control action	Pattern	100 patterns (1 pattern / 100 segments)
	Segment	2000 segments max
	PID Group	16 groups (4 temperature zones x 4 humidity zones)
	Auto tuning	Auto tuning by the target set value
	Proportional band	0.00 ~ 100.00 % (ON/OFF control when 0.00 %)
	Integral time	0.0 ~ 6,000 sec (OFF state with 0 sec setting)
	Derivative time	
	ON/OFF Control	Set proportional band (P.B) as 0.0
	Direct/reverse action	Depends on selection of direct/reverse action of the control output
	Hysteresis	Temperature 0.1 ~ 300 ℃, humidity 0.1 ~ 100 %
Retransmission output	Temperature & Humidity	4 – 20 ㎃ DC Select among present value (PV), set value (SV) and output value (MV)
	Scaling	Auto scaling within set range (4 – 20 ㎃ DC)
Alarm setting	Set alarm	System alarm : 4 contacts 4 contacts per pattern, ON/OFF set function per segment
	Alarm type	high/low alarm, high/low deviation alarm and etc (20 kinds)
	Absolute alarm set range	temperature : −100.00 ~ 200.00 ℃ / humidity : 0.0 ~ 100.0 % RH
	Deviation alarm set range	temperature : −300.00 ~ 300.00 ℃ / humidity : −100.0 ~ 100.0 % RH
	Hysteresis	temperature : −0.0 ~ 300.0 ℃ / humidity : 0.0 ~ 100.0 % RH
Power backup memory	Saving device	internal Flash and FRAM, Temperature&Humidity each 86,400 pint
	Saving function	Program information, SV backup and restoration, Set value for temp & humidity, PV

Output

Digital output (DO)	Relay contact 12 contacts	N.O : 30 V DC 5 A max. 250 V AC 5 A max
		N.C : 30 V DC 1 A max. 250 V AC 2 A max
	Open collector 8 contacts	24 V DC 300 ㎃ max
Control output	SSR output	ON : 24 V DC. pulse voltage (load resistance 800 Ω min) OFF : less than 0.1 V DC proportion cycle: 1 – 1000 sec Output limit : –5.00 ~ 105.00 % Time resolving power : smaller one between 0.1 % and 10 ㎳
	Current output	4 – 20 ㎃ DC (3.2 – 20.8 ㎃ DC) renewal time : 500 ㎳ load resistance : 600 Ω max output limit : –5.00 ~ 105.00 %
Retransmission output	Temperature&Humidity	4.0 – 20.0 ㎃ DC
	output renewal time	500 ㎳
	Resistive load	less than 600 Ω
	output limit	–5.00 ~ 105.00 %
	output types	PV, SV, MV free choice
	Resolving power	approximately 8,000
	Renewal time	500 ㎳

Monitor specification

Screen standard	Color STN LCD (115.17 × 86.37 ㎜)
Number of Pixels	320 X 240 Pixel, 256 Colors
Back light	CCFL
Back light life	About 20,000 h
Touch type	Resistive Overlay type (4 wires)
Language	Korean/English, English/Chinese (Simplified Chinese Characters), English/Chinese (Traditional Chinese Characters), Korean/Chinese (Simplified Chinese Characters), Korean/Chinese (Traditional Chinese Characters)

Communication spec

Application rating	EIA-RS232, RS422/485, USB V1.1	
Max number of connection	RS232	1 : 1
	RS422/RS485	1 : 32 (address 1~999)
Communication type	RS232	Full Duplex
	RS422/485	4 Wire type, Half Duplex
Synchronous type	RS422/485	Asynchronous Mode
Communication distance	USB V1.1	approximately within 1 m
	RS232	approximately within 10 m
	RS422/485	approximately within 1.2 ㎞
Communication speed	USB V1.1	approximately 1 Mbps
	RS232, RS422/485	9600 / 19200 / 38400 / 57600 / 115200 BPS
Data Length	RS232, RS422/485	7/8 Bits
Parity Bit	RS232, RS422/485	NONE / EVEN / ODD
Stop Bit	RS232, RS422/485	1 / 2 Bit(s)
Protocol	USB V1.1	Bulk Mode
	RS232, RS422/485	PCLINK / PCLINK+CRC / MODBUS-RTU
Response Time	RS232, RS422/485	0 ~ 999 (㎳)

Dimensions and Panel cutout (Unit:㎜)

● Dimension

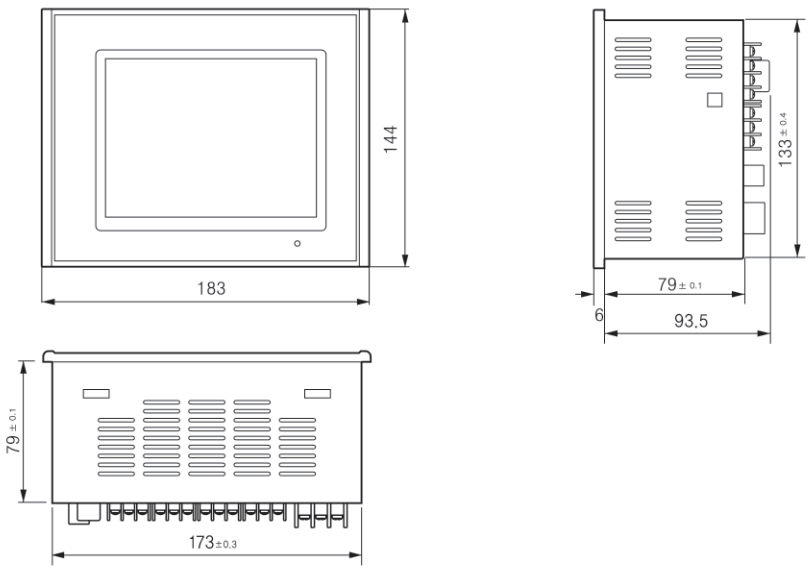

● Panel cutout

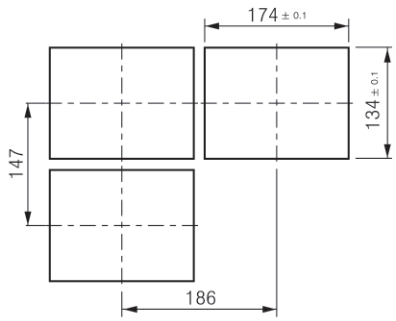

Connection diagram

■ Additional type input/output board (output board -1)

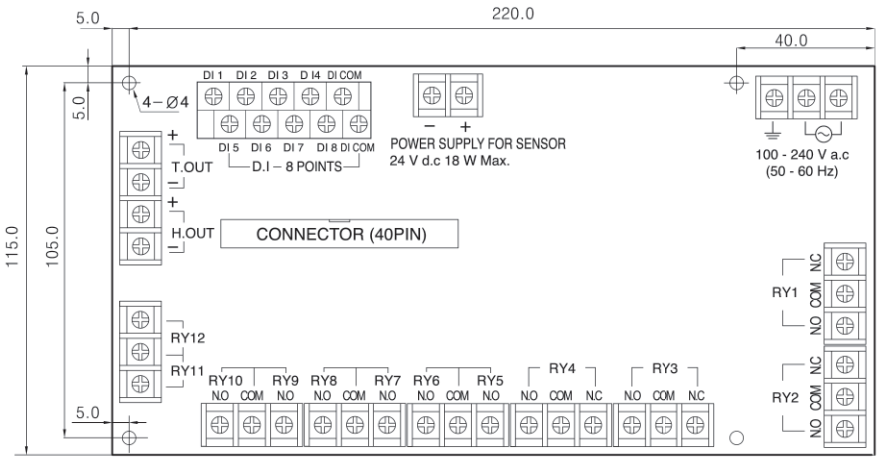

■ Additional type output board (output board -2)

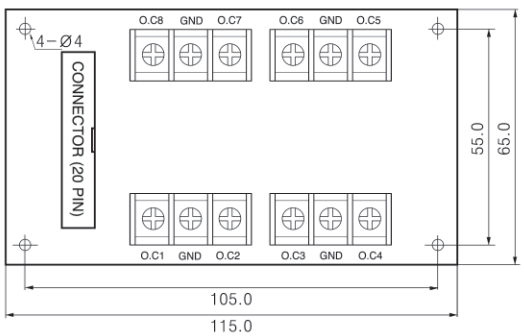

■ Additional type output board (output board -3)

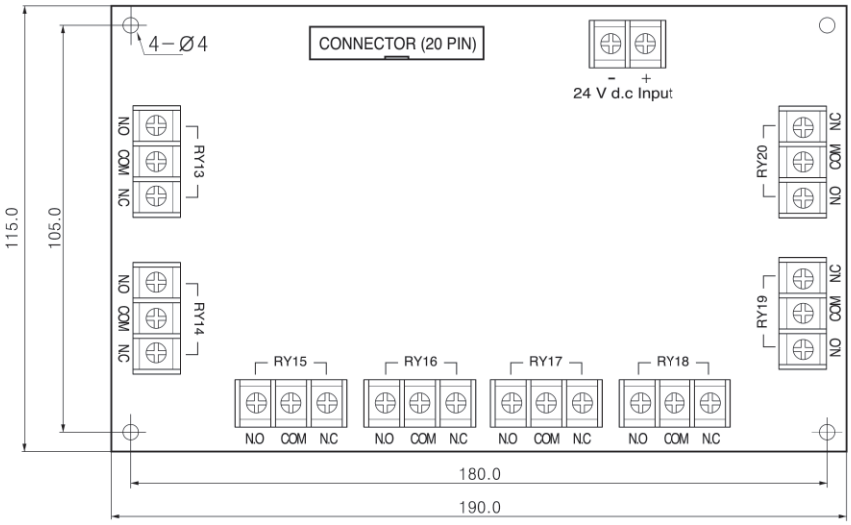

■ Standard type (model : TH500-1 □)

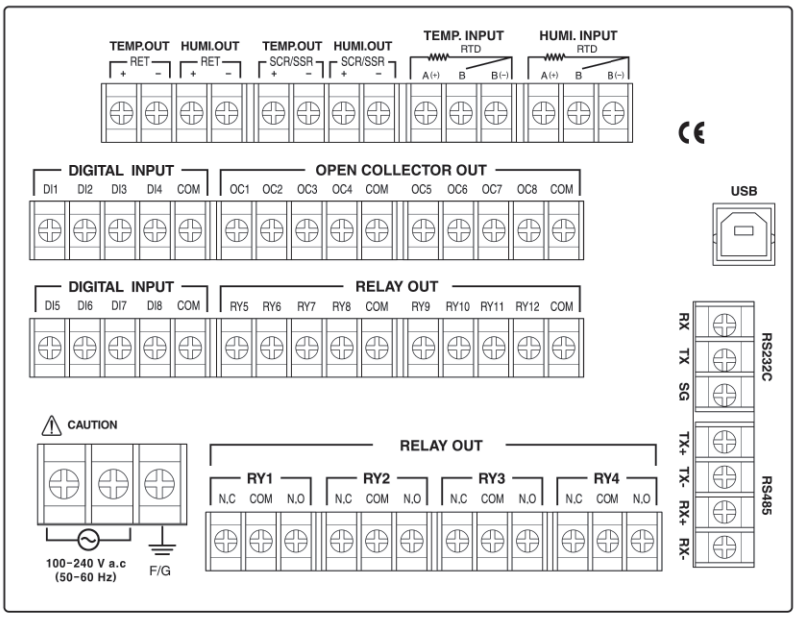

■ Additional type (model : TH500-2 □)

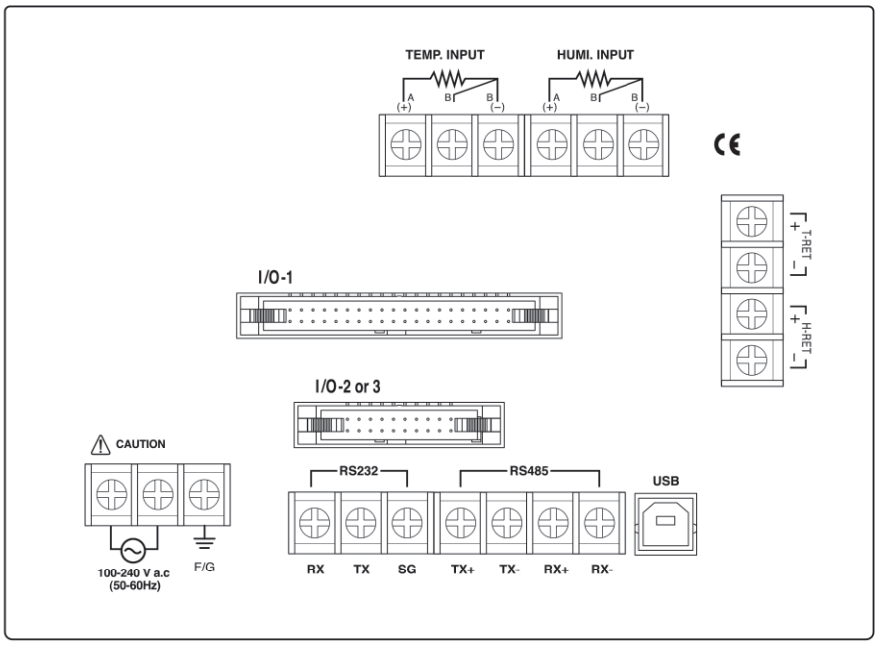

TH300

Programmable temperature, Humidity controller

- Touch panel color LCD screen
- Precise control
- 100 patterns (Total 2,000 segments, 100 SEG / PTN)
- Temperature / humidity independent PID control
- Various alarm functions
- Digital input (DI) 4 contacts, digital output (DO) 12 contacts
- Communication function
  (RS232 or RS485, selected by the suffix code)

Suffix code

Model	Code		Description
TH300	□	□	Programmable Temperature&Humidity controller (DIN 96 × 96)
Communication	1		RS232C communication
	2		RS485 / 422 communication
Language (optional)		1	Korean and English (Standard type)
		2	English and Chinese (Simplified Chinese Characters)
		3	English and Chinese (Traditional Chinese Characters)

Specification

Input

Temperature sensor (Dry)	RTD (Pt100 Ω) or 0 – 5 V DC ※ 4 – 20 ㎃ DC (external resistance 250 Ω) ※ Pt100 Ω (IEC 751)
Humidity sensor (Wet)	
Sampling time	500 ㎳
Measurement range	Temperature : –100.0 ~ 500.0 ℃
	Humidity : 0.0 ~ 100.0 % RH
Digital Input (DI)	4 contacts (1a × 4)

Function

Display accuracy	Temperature : ±0.2 % of FS Humidity : ±2 % of FS
Insulation resistance	500 V DC min 10 ㏁ (between the primary and secondary terminal, between the primary / secondary terminal and earth terminal)
Dielectric strength	2500 V AC 50 / 60 ㎐ (between the primary and secondary terminal)

Operation environment

Ambient temperature	0 ~ 50 ℃
Ambient humidity	20 ~ 90 % RH (without dew condensation)
Storage temperature	-25 ~ 70 ℃
Vibration resistance	10 - 55 Hz, amplitude 0.75 ㎜, 3 directions 4 times, 5 min/cycle.
Shock resistance	147 ㎧, 3 directions 3 times.
Dimension	96(W)×96(H)×100(D)
Weight	approx. 582 ㎏ (body + fastener)

Standard specification

Power supply voltage	100 - 240 V AC, voltage fluctuation : ±10 %
Power frequency	50 - 60 ㎐
Power consumption	10 VA max
Ambient temperature	0 ~ 50 ℃
Ambient humidity	20 ~ 90 % RH (No dew condensation allowed)
Storage temperature	-25 ~ 70 ℃
Vibration resistance	10 - 55 Hz, amplitude 0.75 ㎜, 3 directions for 4 times, 5 min/cycle
Shock resistance	147 m/s^2, to 3 directions for 3 times
Dimension	96(W) × 96(H)
Weight	Approx. 850 g (included the weight of box)

Monitor specification

Screen rating	TFT LCD (70.08 × 52.56 ㎜ : 3.5″)
Number of Pixels	320 X RGB X 240
Back light	Edge Light LED B/L
Back light life expectancy	Approximately 40,000 hours
Touch type	Register type (4 wires)
Language	Korean/English, Korean/Chinese (Simplified Chinese Characters, English/Chinese (Traditional Chinese Characters). *selected by the suffix code

Communication

Applicable rating	EIA-RS232C, RS485/422	
Max number of connection	RS232C	1 : 1
	RS485/422	32 devices max (includes the master). ※ address 1 ~ 999
Communication type	RS232C	Full Duplex
	RS485/422	2 wires type half duplex
Synchronous type	RS232,485/422	Asynchronous mode
	RS232C	Approx. within 10 m
	RS485/422	Approx. within 1.2 ㎞
	RS232C,485/422	9600 / 19200 / 38400 bps
Data Length	RS232C,485/422	7/8 Bits
Parity Bit	RS232C,485/422	NONE / EVEN / ODD
Stop Bit	RS232C,485/422	1 / 2 Bit (s)
Protocol	RS232C,485/422	PCLINK / PCLINK + CRC / MODBUS-RTU
Response Time	RS232C,485/422	0 – 999 ㎳

Output

Control output (OUT)	SSR	ON : 24 V DC pulse voltage, OFF : below 0.1 V DC Pulse voltage (resistive load above 800 Ω)
		Cycle time : 1 ~ 1000 sec
Retransmission output (RET)	Temperature	4 – 20 ㎃ DC (resistive load 600 Ω max)
	Humidity	present value (PV), output amount (MV), set value (SV) ※by the internal selection
	Resolving power	7000 max (regarding 4 – 20 ㎃)
	Renewal time	500 ㎳
Digital output (DO)	Relay	8 contacts (1a X 8 contacts) N.O : 30 V DC 5 A, 240 V AC 5 A
	Transistor	4 contacts (Open collector output). 24 V DC 300 ㎃ max

Function

Input	Input compensation	Temperature : −100.00 ~ 100.00 ℃ Humidity : −100.0 ~ 100.0 % RH
	Dry/wet bulb sensor compensation	Compensate the difference between the wet and dry bulb sensor after removing the wet bulb sensor gauze.
	Scaling	DC Voltage (V DC) : Input scaling depending on the range variation.
	Input filter	1 ~ 180 sec
	Input break detection	UP scale (in case of the RTD input), Operation stops when exceeding ±5 % of the range limit.
Control mode	Operation method selection	Constant value control/program control selectable.
Control action	Pattern	100 patterns (100 segments/1 pattern)
	Segment	2,000 segments max.
	PID group	16 group (temperature 4 zones x humidity 4 zones)
	Auto tuning	Auto tuning depending on the target set value.
	Proportional band	0.00 ~ 600.00 ℃ (ON / OFF control when value is 0.00)
	Integral time	0.0 ~ 6,000 sec (OFF state when time is set to 0)
	Derivative time	0.0 ~ 6,000 sec (OFF state when time is set to 0)
	ON/OFF control	Set the proportional band to 0.0
	Direct/reverse control	Depends on the direct/reverse action of control output.
	Hysteresis	0.1 ~ 600 ℃ (with humidity, wet bulb temperature or replaced value)
Retransmission output	Temperature·humidity	4 – 20 ㎃ DC select among the present value(PV), set value(SV), and output amount (MV)
	Scaling	Automatically scales the high and low range (4 – 20 ㎃ DC).
Alarm setting	Set alarm	System alarm : 4 contacts. Alarm 4 contacts per pattern
	Alarm type	High/low alarm, low deviation alarm and etc (20 kinds)
	Absolute alarm	Temperature : −100.00 ~ 500.00 ℃ Humidity : 0.0 ~ 100.0 % RH.
	Deviation alarm	Temperature : −600.00 ~ 600.00 ℃ Humidity : −100.0 ~ 100.0 % RH.
	Hysteresis	Temperature : 0.0 ~ 600.0 ℃ Humidity : 0.0 ~ 100 % RH.
Power backup memory	Saving device	Internal flash and FRAM, Temperature / Humidity each 86,400 point.
	Saving function	Save and restore the program information and set value and save the temperature humidity set value and indication value

Dimension and panel cutout (unit : mm)

● Dimension

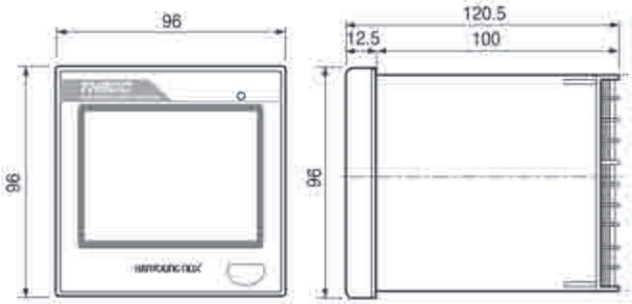

● Panel cutout

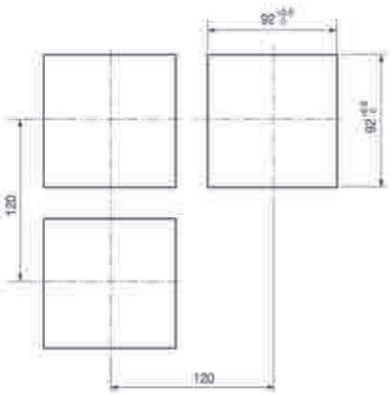

Connection diagram

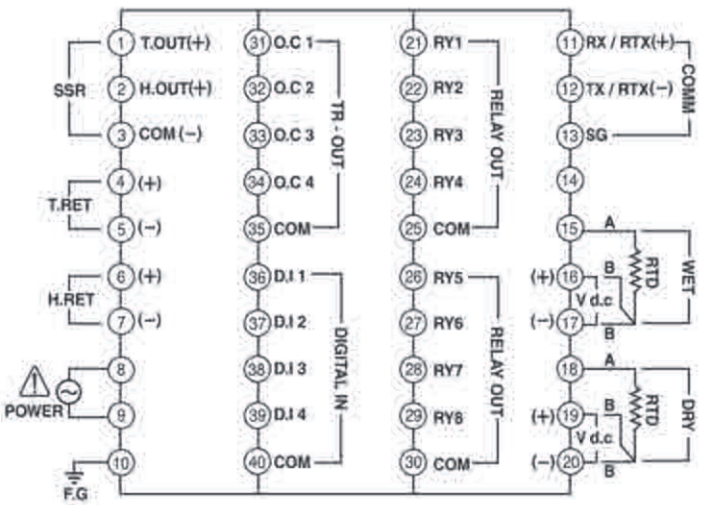

TD500

Programmable Temperature Controller

- Touch Panel Color LCD screen
- 2 channels control
- 100 patterns max, 100 segments / pattern
  (Total 2400 segments)
- PID auto tuning
- Various alarm functions
  (output : 4 contacts, operation : 20 types)
- Digital input 8 contacts, digital output 16 contacts
- Communication function
  (RS485 or RS232 depends on the suffix code)

Suffix Code

Model	Code			description
TD500 –	□	□	□	Programmable Temperature Controller
Type	1			Communication (RS485 / 422 Communication, USB)
	2			Communication (RS232 Communication, USB)
	N			None (only when need the I/O (input/output board))
Input–Output board		1		Contact input (DI) 8 contacts Contact output (DO) 8 contacts Transistor output (DO) 8 contacts
		N		Non (Only necessary standard body)
Language				Korean/English (standard type) No code indication
			2	English/Chinese (Simplified Chinese character)

Monitor specification

Screen rating	Color STN LCD 144.78 ㎜ (5.7″)
Number of pixels	320 X RGB X 240
Back light life expectancy	CCFL(approx. 20,000 hrs)
Touch type	Resistive type (4 wires)
Language	Korean/English or English/Chinese (Simplified Chinese character)
Displaying channel	2 channels (Select the 1 channel and 2 channel indications by the internal selection)

Specification

Input

Number of channels	2 channels
Thermocouple input	K, J, E, T, R, S
RTD input	Pt 100 Ω(IEC751)
DC rated voltage	0 – 10 V, –10 – 20 ㎷, 0 – 100 ㎷, 1 – 5 V DC (with 4–20 ㎃ DC, attach 250 Ω external resistance)
Contact input(DI)	8 contacts
Input sampling time	Each channel 500 ㎳
Input impedance	Thermocouple/dc voltage (㎷) : 1 ㏁, DC voltage(V) : Approx. 1 ㏁ DC current (4 – 20 ㎃ DC) : attach external resistance 250 Ω
Allowable wiring resistance	RTD : max 50 Ω/1 line(same resistance for 3 lines)
Sensor current	RTD : 300 ㎂
Detect input disconnection	With the input break, it displays "---", Output OFF.
Allowable input voltage	DC low voltage (㎷ DC) : 5 V DC / DC high voltage (V DC) : 15 V DC
Input compensation	±100.0 ℃ (Compensation is available for each interval)
Input display resolution	1 digit of decimal point
Memory function	Setting and operation information (internal Flash and NVRAM)
R.J.C accuracy	Max ±1.0 ℃
Scaling range	–999.9 ~ 9999.9
Insulation resistance	Min 20 ㏁. 500 V DC.(input terminal – earth terminal)
Dielectric strength	2,500 V AC. 50 / 60 ㎐ for 1 min (input terminal – earth terminal)

Performance

Display accuracy	±0.1 % of FS ±1 Digit (K, J, E, T) ±0.15 % of FS ±1 Digit (R, S) ±0.1 % of FS ±1 Digit (RTD) ±0.1 % of FS ±1 Digit (DC voltage)
Insulation resistance	Min 20 ㏁, 500 V DC (input terminal – earth terminal)
Dielectric strength	2500 V AC, 50 / 60 ㎐, for 1 min (input terminal – earth terminal)

Control function and output

● Operation setting

Operation type	program control / Fixed value control selection
Limitation of SV rate change	When performing Fixed value control, set the rate of change per min regarding the set value.
Limitation of output rate change	Limits an amount of output to become changed no more than 10 %(5 % per 0.5 sec) per second.
Fixation control operation time setting	when performing fixed value control, set the operation time (Set time : 9999 hour 59 min)
Electrical failure backup handling	STOP : operation setting, COLD : control again from the beginning, HOT : control from the stopped point.
BEEP melody selection	Select the Beep melody when operating with touch panel
Touch input lock	Limits touch panel operation.(With the state of lock, only possible to operate menu button and next button)
Current time/ operation time reservation setting	Set the time of system and the operation time reservation.

● Program setting

Pattern setting	Set the set value and PID group of segment in each patterns, segment time, standby function and time signal.
Segment input/delete	Input or delete the segment of each pattern
Time signal setting	For the time signal of each segment, select either "segment ON/OFF" or "time operation".
Start/end setting	Select among start mode(SSV/PV1/PV2), end(RST/HOLD) mode and end segment
Pattern repetition and connection	Set the number of repetition of operation pattern and connection pattern Segment and number of parts repetition.
Standby operation setting	Set the standby temperature range of each pattern and standby time.

● System setting

Sensor input setting	Thermocouple type/DC voltage input selection and sensor types, input or usable range, input compensation and input filter time.
Control output setting	Set the control mode (heating control/cooling control), output types (current output, SSR, relay), A.R.W, output cycle, ON/OFF Control dead zone, output direction (forward/reverse), current output range and etc
Retransmission output setting	Set the retransmission output type of each channel (PV, SV, MV), output range, sensor break output(0 ㎃, 4 ㎃), current output compensation value of each channel and etc
Inner signal setting	Set the each number of inner signal (OFF, 1channel, 2channel), types (TSV, NSV, PV1, PV2), operation range, range direction (inside range, outside range), delay time and etc
Alarm setting	Set the observing condition of alarm operation (ALWAYS, RUN, FIX RUN, PROG RUN), alarm code of each channel, alarm set value, hysteresis and etc.
P. I. D setting	Set the auto tuning gain of each channel, 4 types of PID group and level within each channel, PID auto/manual, auto tuning button (A/T) display, PID integer of each zone, dead band and etc
Proportion band	0.0 ~ 1000.0 ℃ (ON/OFF control when setting with "0")
Integral time	0 ~ 6000 sec
Differential time	0 ~ 6000 sec
ON/OFF control hysteresis	0.1 ~ 1000.0 ℃

Proportional time	1 ~ 1000 sec
A.R.W(Anti reset windup)	50 ~ 200 % (proportional band)
Amount of output	-5.0 ~ 105.0 %
PID Zone	4 group (Level PID)
Digital input (DI) setting	Set the operation type, standby time, valid point of time, DI name and etc.
Digital output (DO) setting	Categorize the each signal output by actual relay or open collector and select output number as for assign output number, alarm output number, time signal 18 contacts output number, input disconnection of each channel, operation of each channel, standby of each channel, hold of each channel, increase interval of each channel, maintain interval of each channel, decrease interval of each channel, contact input Error (DI Error), program end of each channel, I.S 1 and I.S number and output of series(AND) connection, I.S 2 and I.S number and output number of series(AND) etc.
Communication setting	Set the RS232C or RS485/422 communication function depends on the suffix code
Other setting	Language selection (Korean/English, Korean/Chinese), condition of each channel (control function, indicate function, not using channel, channel operation at the same time, channel operation individually) selection.

● Control output

Control output	Relay	Heating and cooling synchronous control (contact output (DO) is applied)
		N.O : 250 V AC 5 A, 30 V DC 5 A N.C : 250 V AC 2 A, 30 V DC 1 A
	SCR	Heating and cooling synchronous control
		Output signal : 4 – 20 ㎃ DC. (load resistance max 600 Ω)
		Output accuracy : ±0.1 % of FS
		Temperature drift : ±200 ppm/℃ (output part)
	SSR	heating and cooling synchronous control
		Voltage pulse output : 24 V DC (load resistance min 600 Ω)
		Resolving power : smaller one between 0.1 % and 10 ㎳

● Retransmission output

Retransmission output	Output lists	Select the Present value (PV), Set value (SV) and output amount of heating side (H.MV) / output amount of cooling side (C.MV) in each channel
	Current output	4 – 20 ㎃ DC (By the scale setting)
	Resolving power	16 bits
	Output range	Setting bound of scaling range
	Accuracy	±0.1 % of FS
	When performing heating/cooling control and if control output type of cooling side is SCR or SSR then corresponding channel cannot use retransmission output.	

● Digital output (DO)

Output number of contact	Total 16 contacts (relay : 1 c × 4 contacts, 1 a × 4 contacts / open collector : 8 contacts)
Open collector	24 V DC. 300 ㎃ max. (load resistance)
Relay contact	N.O side 250 V AC 5 A or 30 V DC 5 A N.C side 250 V AC 2 A or 30 V DC 1 A (load resistance)

● Digital input(DI)

Input number of contact	Total 8 contacts
Operate the Channels synchronously (1channel/2channel)	DI-1(RUN/RST) DI-2~DI-4(RST) DI-5(STEP/RST) DI-6(HOLD/RST) DI-7(HOLD-ON/RST) DI-8(HOLD-OFF)
Operate the Channels individually (2channel)	DI-1(CH.1 RUN/CH.1 RST/ERR/RST) DI-2(CH.2 RUN/CH.2 RST/ERR/RST) DI-3(CH.1 RST/CH.2 RST/ERR/RST) DI-4(CH.1 RST/CH.2 RST/ERR/RST) DI-5(CH.1 STEP/CH.1 RST/ERR/RST) DI-6(CH.1 HOLD/CH.1 RST/ERR/RST) DI-7(CH.2 STEP/CH.2 RST/ERR/RST) DI-8(CH.2 HOLD/CH.2 RST/ERR/RST)
ERROR Input active	RUN/Always selection
Input signal	Non voltage contact input (ON: max 10 Ω, OFF: min 500 ㎏)

Measurement range

Classification	Input types	Measurement range
Thermocouple	K	-200.0 ~ 1370.0 ℃, ±0.1 % of FS
	J	-200.0 ~ 1200.0 ℃, ±0.1 % of FS
	E	-200.0 ~ 1000.0 ℃, ±0.1 % of FS
	T	-200.0 ~ 400.0 ℃, ±0.1 % of FS
	R	0.0 ~ 1700.0 ℃, ±0.15 % of FS
	S	0.0 ~ 1700.0 ℃, ±0.15 % of FS
RTD	Pt 100 Ω (IEC751)	-200.0 ~ 640.0 ℃ ±0.1 % of FS
DC low voltage	㎷ DC.(0.0 - 100.0 ㎷), (-10.0 - 20.0 ㎷)	±0.1 % of FS -999.9 ~ 9999.9
DC high voltage	V DC.(0.0 - 10.0 V), (1 - 5 V DC) 4 - 20 ㎃ DC. external resistance 250 Ω	±0.1 % of FS -999.9 ~ 9999.9

Communication setting

Applied standard	EIA-RS232C, EIA-RS422/485	
Max connection number	RS232	1 : 1
	RS422/485	1 : 256
Communication method	RS232	Full Duplex
	RS422/485	4 wired/2 wired half duplex
Synchronous method	RS232 RS422/485	Asynchronous
Communication distance	RS232	Approximately 10 m within
	RS422/485	Approximately 1.2 ㎞ within
Communication speed	RS232 RS422/485	2400 ~ 115200 bps
Length of data	RS232 RS422/485	8 bit
Parity bit	RS232 RS422/485	NONE
Stop bit	RS232 RS422/485	1 bit
Communication protocol	RS232 RS422/485	PC LINK + CHECK SUM
Delayed response time	RS232 RS422/485	1 + (0 ~ 250) ㎳

Power

Power supply voltage	100 – 240 V AC. 50 / 60 ㎐
Voltage fluctuation percentage	±10 % of power supply voltage
Power consumption	Body : approximately 16 VA, input/output board : approximately 20 VA (220 V AC with 60 ㎐)
Ambient temperature	0 ~ 50 ℃
Ambient humidity	20 ~ 90 % RH
Storage temperature	-25 ~ 70 ℃
Vibration resistance	4.9 ㎧ 4 – 150 ㎐, 2 h
Shock resistance	147 ㎧, To the direction of 6 for 3 times
Weight	Approximately 2.35 ㎏

Dimension and panel cutout (Unit : ㎜)

● Dimension

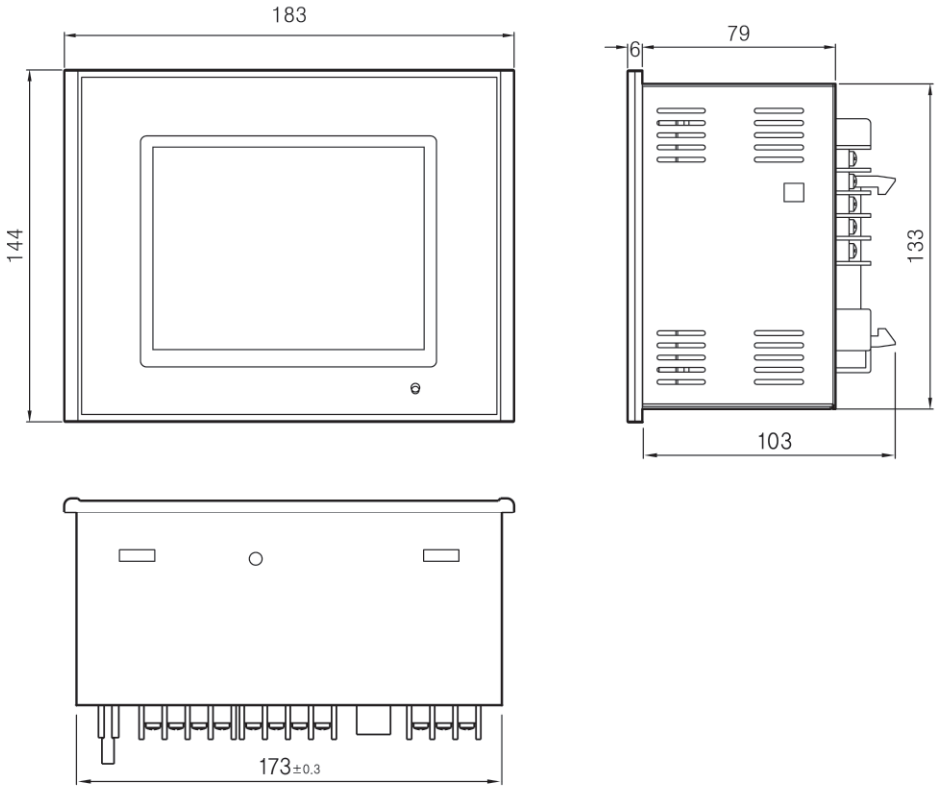

● panel cutout

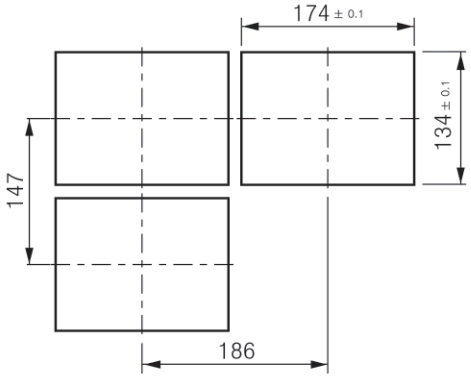

Connection diagram

Body connection diagram

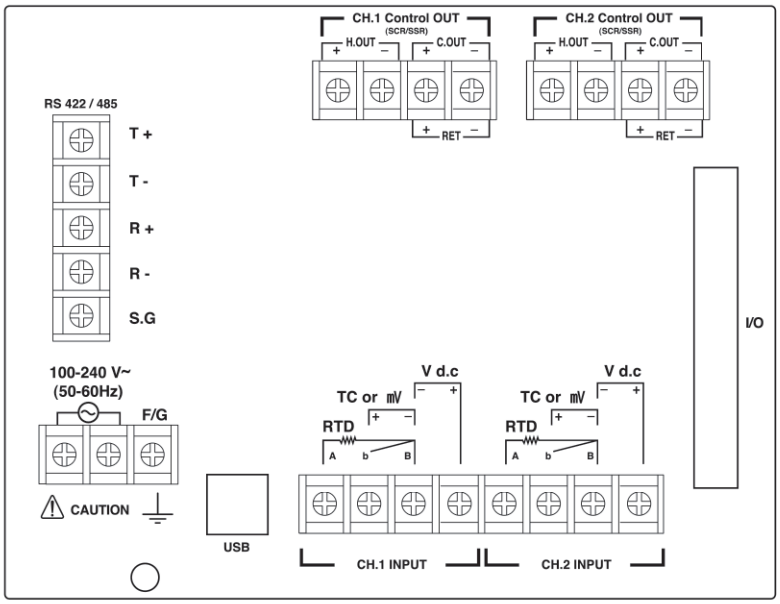

I/O board connection diagram

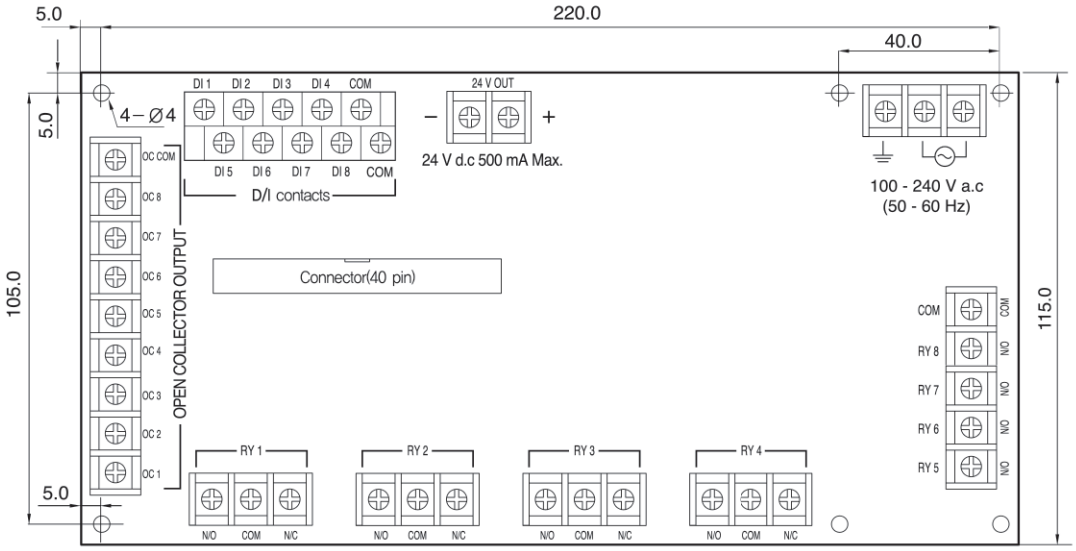

NP200

Programmable temperature controller

- Multi input/output, ±0.1 % high accuracy
- 30 patterns, 300 segments (1 Pattern/99 segments)
- Heating cooling PID control
- 3 stages level PID selection (PID group 4 types)
- PID auto tuning mode 2 types
- Contact input 7 contacts, user output 10 contacts
- Communication function (RS485 / 422)

Suffix code

Model	Code		Description
NP200-	□	□	Programmable temperature controller, 96(W) X 96(H) ㎜
Control type	0		Universal type (heating)
	1		Heating/cooling type (synchronous control type)
Option		0	None (DI-1 ~ DI-3 standard)
		1	Communication function (RS485/422)
		2	Contact input(DI) 4 contacts (DI-4 ~ DI7)
		3	Communication(RS485/422)+contact input 4 contacts (DI-4 ~ DI7)

※ Option contact input 4 contacts are (DI-4) ~ (DI-7)

Specification

Input

Thermocouple	K, J, E, T, R, B, S, L, N, U, W, PL2
RTD input	KPt 100 Ω, Pt 100 Ω
DC rated voltage	1 - 5 V DC, 0 - 10 V, -10 - 20 ㎷, 0 - 100 ㎷, 4 - 20 ㎃ (attach 250 Ω external resistance)
Input sampling time	250 ㎳
Input display resolution	Usually less than the decimal points of range
Input impedance	Min 1 ㏁ (thermocouple, DC voltage input : ㎷). approx. 1 ㏁ (DC voltage: V)
Allowable signal source resistance	Max 250 Ω (thermocouple input). Max 2 ㎏ (DC voltage input)
Allowable wiring resistance	Max 150 Ω/1 wire (RTD input. But 3 wires must have same resistance value)
Allowable input voltage	±10 V (thermocouple, RTD, DC voltage : ㎷). ±20 V (DC voltage : V)
Scaling	-1999.9 ~ 9999.9 (SL-H 〉SL-L)
Cold junction compensation error	±1.5 ℃ (15 ~ 35 ℃). ± 2.0 ℃ (0 ~ 50 ℃)
Input signal break detection	UP Scale/DOWN Scale selection (thermocouple input). UP Scale (RTD input)
Input compensation	-100.0 ~ 100.0 % of FS
Input filter	OFF. 1 ~ 120 sec

Performance

Display accuracy	±0.1 % of FS ±1 Digit. (K, J, E, T, L, U, W, PL2) (for the exception, please refer to the input type and range chart)
	±0.15 % of FS ±1 Digit. (R, B, S)
	±0.2 % of FS ±1 Digit. (N)
	±0.1 % of FS ±1 Digit. (RTD input)
	±0.1 % of FS ±1 Digit. (DC voltage input)
Insulation resistance	Min 20 MΩ, 500 V DC 1st terminal–2nd terminal, 1st terminal–earth terminal, 2nd terminal–earth terminal
Dielectric strength	2,300 V AC, 50 / 60 Hz, 1 minute (between the different recharging part), 1st terminal–2nd terminal, 1st terminal–earth terminal

Control function and output

Pattern and segment	30 patterns, 300 segments (1 pattern/99 segments)
Operation type	Select the program operation or fixation operation
Control type	PID control and ON/OFF control
Control action	Select either reverse operation (heating) or direct operation (cooling) (By the parameter setting)
Contact input(DI)	Contact input 7 contacts (RUN, RESET, HOLD, STEP, PT–END OFF select operation) 〉(select the pattern by the combination of contact input 4–7)
PID auto tuning	PID auto tuning by standard mode and low measurement value mode (set value –10 % of FS)
Proportional band	0.1 ~ 999.9 % (FS)
Integral time	OFF, 1 ~ 6,000 sec
Differential time	OFF, 1 ~ 6,000 sec
A.R.W(Anti Reset Wind–up)	Auto, 50.0 ~ 200.0 % (proportional band)
Proportion cycle	1 ~ 1000 sec (with relay output and SSR output)
ON/OFF control	Select the output types by the parameter
PID group	4 types of PID group
PID selection	Level PID control / segment PID control selection
Dead zone (D.B)	Set the dead zone when performing the heating/cooling control (–100.0 ~ 50.0 % of output value)
Manual reset	–0.5 ~ 105.0 % of output amount (when integral time is OFF)
Manual output	0 ~ 100 % of output amount
Input break output	–0.5 ~ 105.0 % of output amount (set an amount of output when input breaks)
Hysteresis	0.0 ~ 100.0 % of FS (ON/OFF control output, alarm output)
Fuzzy operation	Select the fuzzy operation by the parameter
Retransmission output	Present value/set value/amount of output/external power supply (24 V DC, 20 mA DC Max) selection
Retransmission output scaling	Present value / set value scaling set up
Alarm types	20 kinds (selected by the parameter)
Alarm setting range	Absolute alarm (0 ~ 100 % of range), deviation alarm (–100 ~ 100 % of range span)

User output: 10contacts

Number	Setting lists	Description
1	ALM 1~4	Alarm output 1~4 contact
2	TS1~TS5	Time signal output 1~5 contact
3	IS1~IS5	Inner signal output 1~5 contact
4	PTEND	Program pattern end output 1 contact
5	PROG	Output when program RUN 1 contact
6	FIX	Output when the fixed value control 1 contact
7	RESET	Output when the reset 1 contact
8	HOLD	Output when the hold 1 contact
9	WAIT	Output when the WAIT 1 contact
10	MAN	Output when the manual control 1 contact
11	PT UP	Output when the pattern increment 1 contact
12	PT DOWN	Output when the pattern decrement 1 contact
13	PT SOAK	Output when the pattern maintaining 1 contact

Output

Control output	Relay	1 c contact, 240 V AC, 3 A. 30 V DC 3 A(resistive load) time resolving power : smaller one between 0.1 % and 10 ㎳
	SSR	Approximately more than 25V DC (resistive load min 600 Ω) (limits within approximately 30 ㎃ DC with disconnection) time resolving power : smaller one between 0.1 % or 10 ㎳
	SCR	4 – 20 ㎃ DC (resistive load max 600 Ω) Accuracy : ±0.3 % of FS (4 – 20 ㎃ DC) Resolving power : approx. 3,000
User output	Temperature alarm	1a X 4 contacts (COM), 1a X 2 contacts (COM) 240 V AC, 3 A. 30 V DC 3 A (resistive load)
	Transistor	Open collector output X 4 contacts (COM) 24 V DC 30 ㎃ max
Retransmission output	RET	4 – 20 ㎃ DC.(resistive load min 600 Ω) Accuracy : ±0.3 % of FS (4 – 20 ㎃) Resolving power : approx. 3,000

Control output composition

Classification	Output symbol	Control output(OUT1)		Control output(OUT2)	
		Relay output	SSR / SCR	U 10	SSR / SCR(Current output)
Regular type	ON/OFF	ON/OFF		(U 10)	Retransmission output
	SSR		SSR		
	SCR		SCR		
	RLY	Relay			
Heating and cooling type	SSR/SSR		SSR	(U 10)	SSR
	SCR/SSR		SCR		
	RLY/SSR	Relay	(Retransmission output)		
	SSR/SCR		SSR	(U 10)	SCR
	SCR/SCR		SCR		
	RLY/SCR	Relay	(Retransmission output)		
	SSR/RLY		SSR	Relay	Retransmission output
	SCR/RLY		SCR		
	RLY/RLY	Relay			

General specification

Power supply voltage	100 – 240 V AC, 50 – 60 ㎐
Voltage fluctuation	±10 % of power supply voltage
Power consumption	10 VA max.
Ambient temperature	0 ~ 50 ℃
Ambient humidity	35 ~ 85 % RH (without dew condensation)
Storage temperature	-25 ~ 70 ℃
Vibration resistance	10 – 55 ㎐, 2 peak amplitude 0.75 ㎜ for 2 hrs each in 3 axis direction
Shock resistance	300 ㎧, 3 times each in 3 axes direction
Weight	Approx. 696 g (included the weight of box)

Range and input code chart

Classification	Input	Code	Range (℃)	Accuracy
Thermocouple	K	K1	−200.0 ~ 1,370.0 *1	±0.1 % of FS. ±1 Digit
	K	K2	−200.0 ~ 1,000.0 *1	
	J	J	−200.0 ~ 1,200.0 *1	
	E	E	−200.0 ~ 1,000.0 *1	
	T	T	−200.0 ~ 400.0 *1	
	R	R	0 ~ 1700	±0.15 % of FS ±1 Digit
	B	B	0 ~ 1800 *2	
	S	S	0 ~ 1700	
	L	L	−200.0 ~ 900.0 *1	±0.1 % of FS, ±1 Digit
	N	N	−200 ~ 1300	±0.2 % of FS ±1 Digit
	U	U	−200.0 ~ 400.0 *1	±0.1 % of FS. ±1 Digit
	W	W	0 ~ 2300	
	PL2	PL2	−200.0 ~ 600.0	
RTD	KPt 100 Ω	KS Pt100 Ω	−200.0 ~ 500.0	
	Pt 100 Ω	Pt100 Ω	−200.0 ~ 640.0	
DC voltage	1 − 5 V	1/5 V	Scaling range −1,999 ~ 9,999	
	1 − 10 V	0/10 V		
	−10 − 20 ㎷	−10/20 ㎷		
	0 − 100 ㎷	0/100 ㎷		
DC current	4 − 20 ㎃ DC	1/5 V *3	Scaling range −1,999 ~ 9,999	

(Cautious) *1 : lower than 0 ℃ degree Celsius : ±0.2 % of FS ±1 Digit

*2 : 0 ~ 400 ℃ degree Celsius range : ±5 % of FS ±2 Digit

*3 : When using the current input, please attach 0.1 % of 250 Ω resistance between the 19 and 20 terminals and use it as 4 − 20 ㎃ DC input.

Dimension and panel cutout (Unit : ㎜)

●Dimension

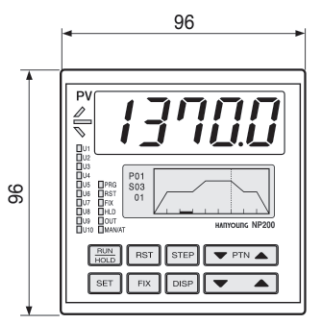

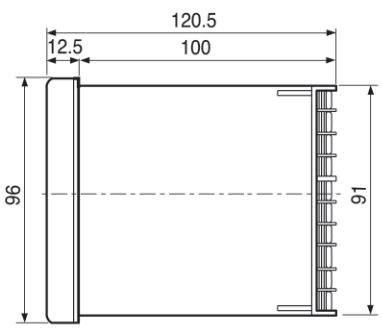

● Panel cutout

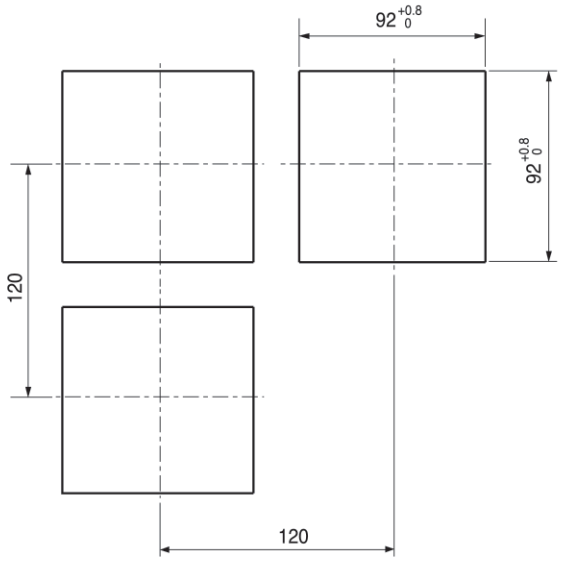

Connection diagram

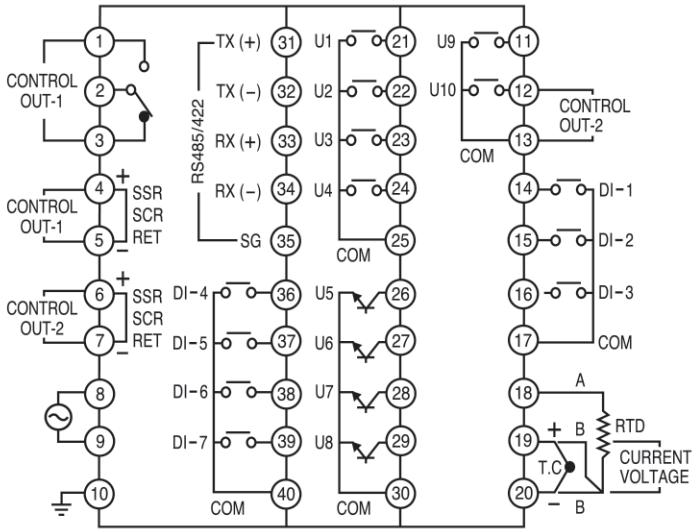

Option: communication (RS485/422), 4 contacts of contact inputs (DI-4 ~ DI-7)

NP100

Programmable temperature controller

- 2 pattern / 20 segments (1 pattern / 10 segments)
- Fuzzy function, PID auto tuning
- Group PID 3 types
- Alarm output / Time signal output each 2 contacts
- Contact input 3 contacts (RUN, RESET, HOLD)
- Communication function (RS485 / 422)

Suffix code

Model	Code		Description
NP100-	□	□	Programmable temperature controller 96(W) X 96(H) ㎜
Control type	0		Universal type (heating)
Option		0	None
		1	Time signal 2 contacts
		2	Communication function (RS485/422)
		3	Time signal 2 contacts and communication (RS485/422)

Specification

Input

Thermocouple	K, J, E, T, R, B, S, L, N, U, W, PL2
RTD input	KPt 100 Ω, Pt 100 Ω
DC rated voltage	1 – 5 V DC, 0 – 10 V, –10 – 20 ㎷, 0 – 100 ㎷, 4 – 20 ㎃ (attach 250 Ω external resistance)
Input sampling time	250 ㎳
Input display resolution	Usually less than the decimal points of range
Input impedance	Min 1 ㏁ (thermocouple, DC rated voltage : ㎷) approx. 1 ㏁ (DC voltage : V) DC voltage (㎷ DC) / thermocouple / RTD : ±10 V DC
Allowable signal source resistance	Max 250 Ω (thermocouple input), Max 2 ㎏ (DC voltage input)
Allowable wiring resistance	Max 150 Ω /1 wire (RTD input But 3 wires must have same resistance value)
Allowable input voltage	±10 V (thermocouple, RTD, DC voltage : ㎷), ±20 V(DC voltage : V)
Scaling	–1999 ~ 9999 (SL–H 〉SL–L)
Cold junction compensation error	±2.0 ℃ (0 ~ 50 ℃)
Input signal break detection	UP Scale / DOWN Scale selection (thermocouple input), UP Scale (RTD input)
Input compensation	–100.0 ~ 100.0 % of FS
Input filter	OFF, 1 ~ 120 sec

Performance

Display accuracy	±0.1 % of FS ±1 Digit (K, J, E, T, L, U, W, PL2) ±0.15 % of FS ±1 Digit (R, B, S) ±0.2 % of FS ±1 Digit (N) ±0.1 % of FS ±1 Digit (RTD input) ±0.1 % of FS ±1 Digit (DC voltage input) (for the exception, please refer to input type and range chart)
Insulation resistance	Min 20 MΩ, 500 V DC 1st terminal-2nd terminal, 1st terminal-earth terminal, 2nd terminal-earth terminal
Dielectric strength	2300 V AC, 50 / 60 Hz, 1 minute (between the different recharging part)

Control function and output

Pattern and segment	2 patterns, 20 segments (1pattern/10 segments)
Control type	PID auto tuning
Control action	Select either reverse operation (heating) or direct operation (cooling) (By the parameter setting)
Range setting	Same as input range chart
Contact input (DI)	RUN, RESET, HOLD operation selection by the external contact input 3 contacts
Auto tuning	Target value auto tuning
Proportional band	0.1 ~ 999.9 % (FS)
Integral time	OFF, 1 ~ 6,000 sec
Differential time	OFF, 1 ~ 6,000 sec
A.R.W(Anti Reset Wind-up)	Auto, 50.0 ~ 200.0 % (proportional band)
ON/OFF control	Select the output type by parameters
PID group	4 types of PID group
Control mode selection	Select AUTO(programmable control) / MAN(manual control) by the front key
Manual reset	-0.5~105.0 % of output amount (when integral time is OFF)
Input break output	-0.5 ~ 105.0 % of output amount (set an amount of output when input breaks)
Hysteresis	0.0 ~ 100.0 % of FS (ON/OFF control output, alarm output)
Fuzzy operation	Select the fuzzy operation by parameter
Retransmission output	Present value/set value/amount of output/external power supply (24 V DC, 20 mA DC max) selection
Retransmission output scaling	Present value / set value scaling set up
Alarm output	2 contacts (high/low alarm, high/low deviation alarm, pattern end alarm and etc)
Alarm types	21 kinds (selection by parameter)
Proportional cycle	1 ~ 1,000 sec (with relay output, SSR output)

● Output

Control output	Relay	1c contact, 240 V AC, 3 A. 30 V DC 3 A(resistive load) time resolving power : smaller one between 0.1% and 100 ㎳
	SSR	Approximately min 25 V DC (resistive load min 600 Ω) limits within approximately 30 ㎃ DC with disconnection time resolving power : smaller one between 0.1% or 10㎳
	SCR	4 – 20 ㎃ DC (resistive load max 600 Ω) Accuracy : ±0.3 % of FS (4 – 20 ㎃ DC) Resolving power : approx. 3,000
Alarm output	Temperature alarm(Relay)	1 a X 2 contacts, 240 V AC, 3 A , 30 V DC 3 A (resistive load)
Time signal output	Transistor	Open collector output, 24 V DC 30 ㎃ max
Retransmission output	RET	4 – 20 ㎃ DC (resistive load max 600 Ω) Accuracy : ±0.3 % of FS (4 – 20 ㎃ DC), Resolving power : approx. 3,000

● Control output composition

Output symbol	Control output(OUT1)		Control output(OUT2)
	Relay output	SSR/SCR	RET/S.P.S
onoF	ON/OFF		RET (Retransmission output) S.P.S (External power supply) (6 – 7 terminal)
SSr		SSR	
CUr		SCR	
rLY	Relay		

General specification

Power supply voltage	100 – 240 V AC, 50 – 60 ㎐
Voltage Fluctuation	±10 % of power supply voltage
Power consumption	10 V A max.
Ambient temperature	0 ~ 50 ℃
Ambient humidity	35 ~ 85 % RH (without dew condensation)
Storage temperature	–25 ~ 70 ℃
Vibration resistance	10 – 55 ㎐, peak amplitude 0.75 ㎜ for 2 mins each in 3 axis direction
Shock resistance	300 ㎧, 3 times each in 3 axes direction
Weight	Approx. 696 g (included the weight of box)

Range and input code chart

Classification	Code	Input	Range(℃)	Accuracy	Note
Thermocouple	tC.K1	K	−200 ~ 1370 *1	±0.1 % of FS ±1 digit	*1 : max 0 ℃ : ±0.2 % of FS ±1 Digit *2 : 0 ~ 400 ℃ : ±5 % of FS ±2 Digit
	tC.K2	K	−199.9 ~ 999.9 *1		
	tC.J	J	−199.9 ~ 999.9 *1		
	tC.E	E	−199.9 ~ 999.9 *1		
	tC.t	T	−199.9 ~ 400.0 *1		
	tC.r	R	0 ~ 1700	±0.15 % of FS ±1 digit	
	tC.b	B	0 ~ 1800 *2		
	tC.S	S	0 ~ 1700		
	tC.L	L	−199.9 ~ 900.0 *1	±0.1 % of FS ±1 digt	
	tC.n	N	−200 ~ 1300	±0.2 % of FS ±1 digt	
	tC.U	U	−199.9 ~ 400.0 *1	±0.5 % of FS ±1 digit	
	tC.Y	W	0 ~ 2300		
	tC.PL	PL2	0 ~ 1390		
RTD	JPt.1	KPt100	−199.9 ~ 500.0		
	Pt.1	Pt100	−199.9 ~ 640.0		
DC voltage	d. 5V	1 − 5 V	Scaling range −1999 ~ 9999		※ When using the current input, please select the 1 − 5 V input code and attach 0.1 % of 250 Ω resistance between the 19 and 20 terminal and use it with 4 − 20 ㎃ input.
	d. 10V	0 − 10 V			
	d.20m	−10 − 20 ㎷			
	d. 100	0 − 100 ㎷			
DC current	d. 5V	1 − 5 V ※			

Dimension and panel cutout (unit : ㎜)

● Dimension

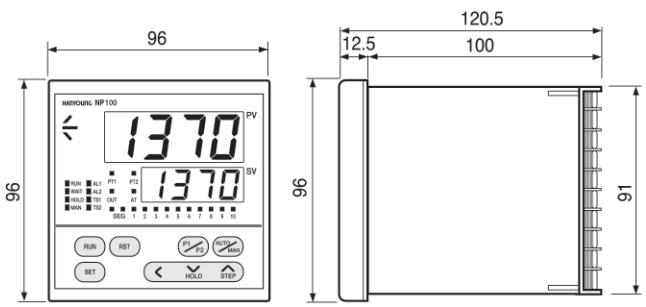

● Panel cutout

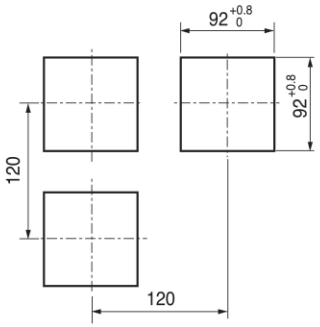

Connection diagram

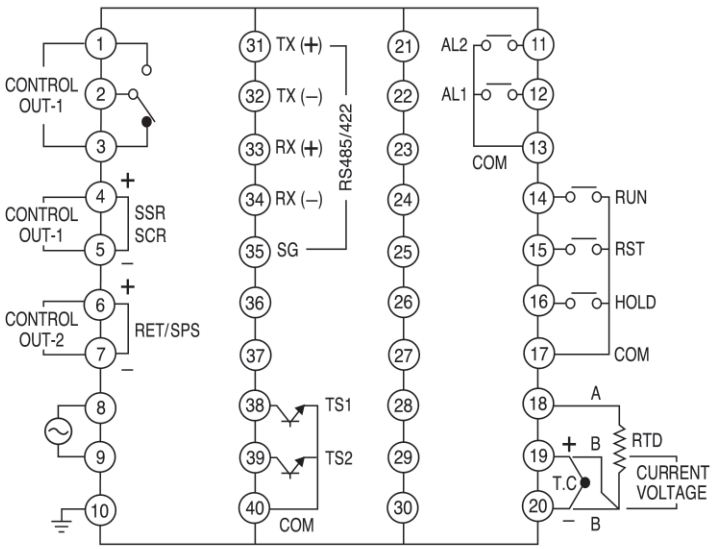

Option: communication (RS485/422), 2 contacts of time signal (TS1, TS2)

HX Series

Digital Temperature controller

- Installation Depth 63 ㎜
- Fast Sampling Cycle 60 ㎳
- Multi-Input · Multi-Output
- Communication (RS485, RS422)
- Heating Control / Cooling Control / Simultaneous Heating · Cooling Control
- Heater Break Alarm / Retransmission Output
- Setting Value (SV) Selection by Contact Input (DI)

Suffix code

Model		Code		Description	
HX	□ -	□	□	Multi-input and output digital temperature controller	
Dimension	2			48(W) X 96(H) ㎜	PID Auto-tuning
	3			96(W) X 48(H) ㎜	
	4			48(W) X 48(H) ㎜	
	7			72(W) X 72(H) ㎜	
	9			96(W) X 96(H) ㎜	
Control output		0		Normal (heating control)	
		1		Heating/cooling control (simultaneous control)	
HX2/3/9 option			0	None	
			1	RS485 communication + Heater break alarm (H.B.A)	
HX7 option			0	None	
			1	RS485 communication + DI 2 contacts (SV2, SV3)	
			2	RS485 communication + Heater break alarm (H.B.A)	
HX4 option			0	None	
			1	RS485 communication + DI 1 contact (SV2)	
			2	RS485 communication + Heater break alarm (H.B.A)	

Specification

Performance

Display accuracy	±0.5 % of FS ±1 Digit Thermocouple (K, J, E, T, R, B, S, L, U, W, PL2). ±1.0 % of FS ±1 Digit Thermocouple (N). ±0.5 % of FS ±1 Digit RTD (KPt100 Ω, Pt100 Ω), DC voltage.
External power supply	12 V DC 20 mA max (Cannot be used when using retransmission output)
Insulation resistance	20 MΩ min (500 V DC), (Primary terminal – Secondary terminal)
Dielectric strength	2,300 V AC 50/60 Hz, 1 min (Primary terminal – Secondary terminal)

Input

Input selection	Thermocouple	K, J, E, T, R, B, S, L, N, U, W, PL2
	Resistance temperature detector (RTD)	Pt100 Ω(IEC), KPt100 Ω(KS)
	DC voltage	1 – 5 V DC, –10 – 20 mV, 0 – 100 mV.
	DC current	4 – 20 mA (250 Ω External resistor attached)
Input sampling time		62.5 ms
Display resolution		Basically below decimal point of measurement range
Input impedance		Thermocouple and input DC voltage (mV): Minimum 1 MΩ or higher. Input DC voltage (V): Approximately 1 MΩ.
Allowable signal source resistance		Maximum 250 Ω (thermocouple), Maximum 2 KΩ (DC voltage)
Allowable wiring resistance		Maximum 10 Ω (RTD). The resistance of the three wires must be same.
Allowable input voltage		Within ±10 V thermocouple, RTD, DC voltage (mV)], within ±20 V [DC voltage (V)]
Scaling		0.0 % ~ 100.0 % of FS. (SL-L ~ SL-H)
Input Compensation		–100.0 % ~ 100.0 % of FS
Input disconnection detection		OFF, UP / DOWN scale selection (thermocouple), UP-scale (RTD)

Control

Control method		a) PID auto-tuning (target value or that goal auto tuning selection) • reverse operation (heating) / operation (cooling) random selection (parameter setting) b) heating / cooling PID control (auto-tuning function)
Set range		Refer to Range and input code.
Contact input (DI)		Select three kinds of pre-set temperature by the external contact.
Heating-side proportional band		0.1 ~ 999.9 %
Cooling-side proportional band		0.0 ~ 999.9 %
Integral time		OFF, 1 ~ 6,000 Seconds
Derivative time		OFF, 1 ~ 6,000 Seconds
Effectively prevent (A.R.W)		Auto, proportional 50.0 ~ 200.0 % ※ A.R.W : Anti Reset Wind-up
ON / OFF control		"Output Settings group" based on the kind of outputthe selection of parameters (output number: 0) ※ When general model uses the relay output, it can select ON / OFF control
PID selection		Select Zone PID ro Group PID.
Manual Reset		When integral time is off, it can select Manual rest.
output volume when Input line breaks		a) OUT1 : –5.0 ~ 105.0 (General type). 0.0 ~ 105.0 % (Heating/Cooling) b) OUT2 : 0.0 ~ 105.0 %
Hysteresis		0.0 ~ 100.0 % of FS. in case, selected on/off control (only General type)
Deadband (heated / cooled)		proportional band –100.0 ~ 50.0 %
Fuzzy function		Feature selection by parameters
Lamp function		Select temperature gradient of the output volume on the setting temperature.(the set temperature / minutes / hours)
Control output	Relay	NO : 5 A 250 V AC, 5 A 30 V DC (Resistive load) NC : 3 A 250 V AC, 1 A 30 V DC (Resistive load)
	SSR (Voltage pulse)	ON Voltage : 12 V DC min, OFF voltage : =0.1 V DC max, Load resistance 600 Ω min
	SCR (Current)	Range : 4 – 20 ㎃ (±5 %), Tolereance : ±0.2 ㎃ Load resistance 600 Ω max

Retransmission output

Signal (RET)	4 – 20 mA DC (load resistance maximum 600 Ω)
Accuracy	±0.5 % of FS (4 – 20 mA range)
Resolving power	Resolving power : Approximately 3,000
Kind	Select one of Indication value (PV), set value (SV), ouput volume (MV), external power supply (12 V dc, 20 mA max)
Scaling	Based on set range limits or scaling settings.

Communication

Communication method	EIA RS485 standard, asynchronous two-wire half-duplex
Communication speed	2400, 4800, 9600, 14400, 19600 bps
Protocol	· PC. LINK, · PC. LINK CHECK SUM, · MODBUS-ASCII, · MODBUS-RTU
Bit format	· Data bit : 7 bit(only PC LINK), 8-bit · Parity bit : None, Even, Odd · Stop bit : 1 bit, 2 bit
Address	1 to 99. The maximum connection capacity: 32 (Including host)

Alarm

Output points (relay)	• Maximum 2 points (HX2, HX3, HX4, HX9 : 1a 2 points) ※ Temperature alarm (AL1, AL2), heater break alarm (HBA), relay control output (OUT2) universal features.
Contact capacity	240 V AC 1A, 30 V DC 1A (Resistive load)
Hysteresis	Range 0.0 % ~ 100.0 %
Temperature alarm (AL1, AL2)	• Alarm type : refer to alarm type and code. • Absolute Range of alarm setting range : 0 ~ 100 % • Deviation alarm setting range : range of ±100 %
Heater break alarm (HBA)	• Maesure Current : 1 – 50 A AC (resolving power : 0.5 A ±5 % of FS ±1 Digit) • Heater burnout detection for C.T : Model CT-50N ※ ON / OFF control is only available on time proportional control. ※ Output ON / OFF time can not be detected in less than 0.2 seconds.

Specification

Model	HX2	HX3	HX4	HX7	HX9
Power supply voltage	100 – 240 V AC 50/60 Hz				
Voltage fluctuation	±10 % of power supply voltage				
Power consumption	6 W max, 10 VA max				
Ambient temperature	0 ~ 50 ℃ (Without condensation)				
Ambient humidity	35 ~ 85 % RH (Without condensation)				
Storage temperature	-25 ~ 65 %				
Vibration (resistance)	10 – 55 Hz, peak amplitude 0.75 ㎜ for 2 hrs each in 3 axis direction				
Shock (resistance)	300 ㎧, 3 times each in 3 axes direction				
Weight (Included the weight box)	212 g	310 g	162 g	236 g	286 g

Input code for input type and range

In Input group (GI n) input type(I nP) parameters, If you select "No. 1" code, K thermocouple range is set as −200 ~ 1,370 ℃.

Input signal	Code	Input type	Range (℃)	Accuracy	Note
Thermocouple (TC)	1	K *2	−200 ~ 1,370	±0.5 % of FS ±1 Digit	• FS is the measurable range from the maximum to the minimum for each range. • Digit is the minimum display value *1 0 ~ 400 ℃ range : ±10 % of FS ± 1 digit *2 below 0 ℃ : ±1.0 % of FS ± 1 digit *3 −150.0 ~ 150.0 ℃ range : ±1.0 % of FS ± 1 digit ※20 → kPt 100 Ω ※21 → Pt 100 Ω (IEC751)
	2	K *2	−199.9 ~ 999.9		
	3	J *2	−199.9 ~ 999.9		
	4	E *2	−199.9 ~ 999.9		
	5	T *2	−199.9 ~ 400.0		
	6	R *2	0 ~ 1700		
	7	B *1	0 ~ 1800		
	8	S	0 ~ 1700		
	9	L *2	−199.9 ~ 900.0		
	10	N	−200 ~ 1300	±1.0 % of FS ±1 Digit	
	11	U *2	−199.9 ~ 400.0	±0.5 % of FS ±1 Digit	
	12	W	0 ~ 2300		
	13	Platinel Ⅱ	0 ~ 1390		
Resistance temperature detector (RTD)	20*	KPt100 Ω *3	−199.9 ~ 500.0		
	21*	Pt100 Ω *3	−199.9 ~ 640.0		
	22	Pt100 Ω	−200 ~ 640		
DC voltage (VDC/㎷DC)	30	1 − 5 V DC	1 − 5 V DC		
	31	0 − 100 ㎷ DC	0 − 100 ㎷ DC		
DC current	30*	4 − 20 ㎃ DC	※ When current input is used, please connect a 250 Ω 0.1% resistor to the input terminal.		

Select type of control output(PID)

Output group (GoUt) and selection of outout kind (oUt) on general temperature
If you select "0", the relay output ON / OFF control action.
If you select "1", the SSR output ON / OFF control action.
If you select the "twice", 4 − 20 mA DC current output operation.
If you select the "three times", PID control relay output to operate.

(1) Regular type

Output selection (oUt)		OUT1 (heating side)		OUT2		Default
		Relay	SSR/SCR/RET	Relay	SSR/SCR/RET	
Regular type	0	Relay (ON/OFF)	−	AL2 (Alarm2 output)	RET (Retransmission output)	1
	1	−	SSR			
	2		SCR (4 − 20 mA)			
	3	Relay (PID)	−			

※ In the case of General model, RET(Transmit output) will not be able to select.

(2) Heating / Cooling

Type	Output selection	OUT1 (Heating side)		OUT2		Default
		Relay	SSR/SCR/RET	Relay	SSR/SCR/RET	
Heating/ Cooling	4		SSR	AL2 (Alarm2 output)	SSR	4
	5		SCR (4 – 20 mA)			
	6	Relay	RET (Retransmission output)			
	7		SSR		SCR (4 – 20 mA)	
	8		SCR (4 – 20 mA)			
	9	Relay	RET (Retransmission output)			
	10		SSR	Relay (Control output)	RET (Retransmission output)	
	11		SCR (4 – 20 mA)			
	12	Relay				

※ Alarm Output 1 (AL1) is basically built-in. (in case of relay output in cooling side, AL2 is not available.)

Alarm type and code

(Cautious) : Display lamp will be ON when output becomes OFF in inverted type.

Hysteresis

(△ : Set value,–▲ : minus alarm set value, ▲ : alarm set value)

Code number	Alarm type	Operation diagram
1	high absolute (proper)	
2	low absolute (proper)	
3	high deviation (proper)	
4	low deviation (proper)	
5	high deviation (Inverted)	
6	low deviation (Inverted)	
7	high/low deviation	
8	within high/low deviation	
9	high absolute (Inverted)	
10	low absolute (Inverted)	
11	high absolute (proper, hold function)	
12	low absolute (proper, hold function)	
13	high deviation (proper, hold function)	
14	low deviation (proper, hold function)	
15	high deviation (Inverted, hold function)	
16	low deviation (Inverted, hold function)	
17	high/low deviation (hold function)	
18	within high/low deviation (Hold function)	
19	high absolute (Inverted, hold function)	
20	low absolute (Inverted, hold function)	
21	heater break alarm 1 (HBA 1)	

Part name and function

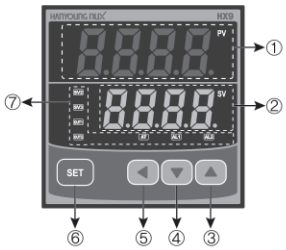

※ HX9 is chosen to explain

Number	Name		Description
①	Process value (PV)		Displays the process value in the operation mode.
②	Set value (SV)		Displays the set value in the operation mode
③	▲	Up key	Increases the set value or used to move between groups and to change an option in a parameter in setting mode
④	▼	Down key	Decreases the set value or used to move between groups and to change an option in a parameter in setting mode
⑤	◀	Shift key	Used to move the position of the digit
⑥	SET	Set key	Sets (confirm) the set value, displays the output amount, or set an option in a parameter in setting mode and moves between the parameters in a group. By pressing for 3 seconds, it enters the display setting mode (setting mode) or returns to the operation mode
⑦	SV2	Operation Indicator	Lights when SV2 is displayed
	SV3		Lights when SV3 is displayed
	OUT1		OUT1 indicator
	OUT2		OUT2 indicator
	AT		Auto-tuning indicator
	AL1		Alarm 1 operation indicator
	AL2		Alarm 2 operation indicator

Parameter composition

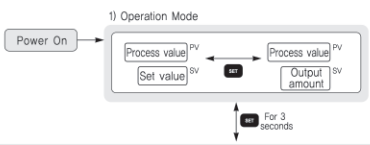

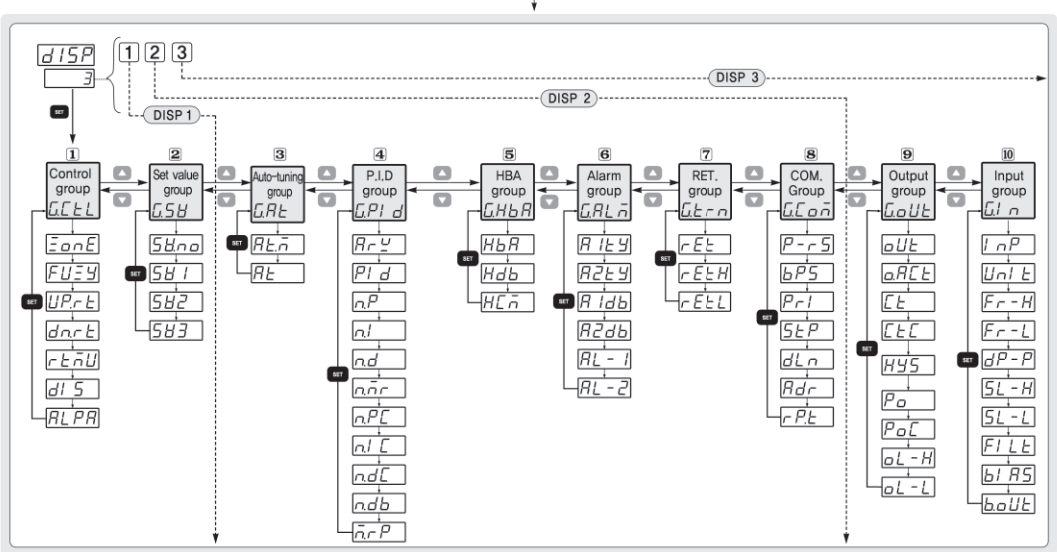

Operation method

■ When turn the power on after completing wiring

(1) After the firmware version of the temperature controller appears for a short period of time, the operation mode is running like the number ① that process value (current temperature) and the set value are displayed.

(2) In the number ①, if SET button is pressed for 3 seconds, it enters dISP display setting mode. It can be selected as DISP 1, DISP 2 and DISP 3 to limit displaying setting groups.

(3) In the operation mode, if SET button is pressed, the output amount is displayed like the picture ⑤ – ⑥ below.

● Switching between modes

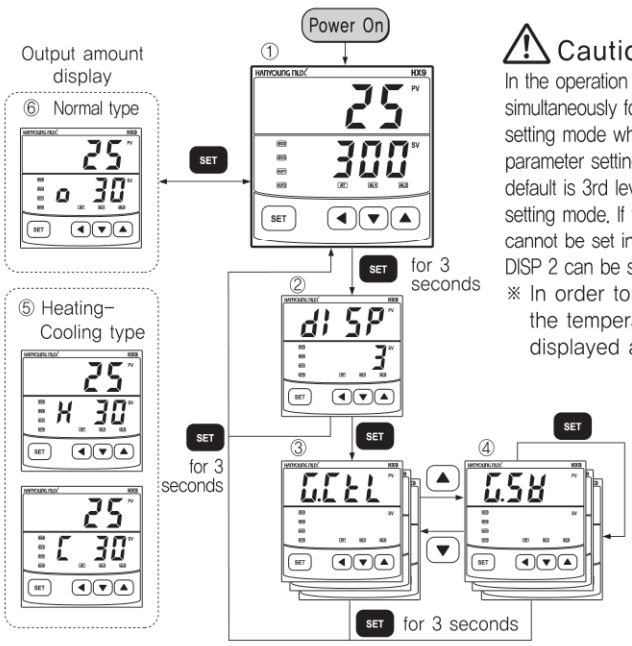

⚠ Caution

In the operation mode, if SET and ◀ button are pressed simultaneously for 3 seconds, it enters LEVL (LEVEL) setting mode which prevents an operator to change parameter setting as limiting access to the group. The default is 3rd level. The level setting mode limits the display setting mode. If the level setting mode is 2nd then DISP 3 cannot be set in the display setting mode. Only DISP 1 and DISP 2 can be set in the display setting mode.

※ In order to return the operation mode, turn off the temperature controller when tESt is displayed and then turn on it again.

1 Control group

Symbol	Parameter	Option	Available condition	Default
G.CtL	Control group	Options for control mode	–	–
ZonE	Zone setting	OFF / ON	Always on	OFF
FUZY	Fuzzy function setting	OFF / ON	PID control	OFF
UP.rt	Initial temperature increase setting	OFF / EUS (0 ~ 100 %)	Always on	OFF
dn.rt	Initial temperature decrease setting	OFF / EUS (0 ~ 100 %)	Always on	OFF
rtnU	Time for slope in ramp function	HOUR / MIN	Always on	HOUR
dI S	External contact input setting	OFF / ON	Always on	OFF
ALPA	2 degrees of freedom gain setting	1 ~ 100 %	Always on	85

2 Set value (SV) setting group

Symbol	Parameter	Option	Available condition	Default
G.SV	Set value setting group	Options for set values	–	–
SVno	Set value Number setting	1 ~ 3 (the chosen set value is displayed and controlled)	Always on	1
SV1	Set value 1 (SV1) setting	EU (0.0 ~ 100.0 %)		EU(0.0 %)
SV2	Set value 2 (SV2) setting	EU (0.0 ~ 100.0 %)		EU(0.0 %)
SV3	Set value 3 (SV3) setting	EU (0.0 ~ 100.0 %)		EU(0.0 %)

3 Auto-tuning (AT) group

Symbol	Parameter	Option	Available condition	Default
G.At	Auto-tuning group	Options for auto-tuning (AT) group	–	–
At.n	Auto-tuning type setting	Standard (STD) : Std / Low PV (LOW) : LoY	ABS	STD
At	Auto-tuning start setting	OFF / 1 ~ 3 / Auto (AUTO)	ABS	OFF

4 PID Group

Symbol	Parameter	Option	Available condition	Default
G.PId	PID group	Options for PID mode	–	–
ArY	ANTI RESET WIND-UP setting	Auto / 50.0 ~ 200.0 %	PID control	100 %
PId	PID group setting	0 / 1 ~ 3	Always on	0
n.P	n. Proportional band (P)	0.1 (H/C TYPE : 0.0) ~ 999.9 %	Selecting one of PID group	5.0 %
n.I	n. Integral time (I)	OFF / 1 ~ 6000 s	Always on	240 s
n.d	n. Derivative time (D)	OFF / 1 ~ 6000 s	Always on	60 s
n.nr	n. Manual reset	-5.0 ~ 105.0 %	Integral time: OFF	50.0 %
n.PC	n. Proportional band (P) for cooling	0.0 (ON/OFF control) / 0.1 ~ 999.9 %	heating · cooling	5.0 %
n.IC	n. Integral time (I) for cooling	OFF / 1 ~ 6000 s	heating · cooling	240 s
n.dC	n. Derivative time (D) for cooling	OFF / 1 ~ 6000 s	heating · cooling	60 s
n.db	n. hysteresis (dead band)	-100.0 ~ 50.0 %	heating · cooling	3.0 %
I.rP	n. Zone position setting	EU(0) 〈 1.RP 〈 2.RP 〈 EU (100.0 %)	PID group 1 or PID group 2	EU(100.0 %)

5 Heater Break Alarm (HBA) group

Symbol	Parameter	Option	Available condition	Default
G.HbA	Heater break alarm group	Options for HBA mode.	–	–
HbA	Current setting of HBA output	OFF / 1 ~ 50 A	HBA Option (Refer to "model name and code" table)	OFF
Hdb	Hysteresis setting of HBA output	EUS (0.0 ~ 100.0 %)		EUS(0.5 %)
HCn	Current measurement value of HBA output	Only indicates current measurement value (0 ~ 50 A)		

6 Alarm group

Symbol	Parameter	Option	Available condition	Default
G.ALn	Alarm group	Options for alarm mode	–	–
A1ty	Alarm 1 type setting	OFF / 1 ~ 22 Refer to "Alarm type and code"	Always on	1
A2ty*	Alarm 2 type setting			2
A1db	Hysteresis (dead band) of alarm 1	EUS(0.0 ~ 100.0 %)	Always on	EUS (0.5 %)
A2db*	Hysteresis (dead band) of alarm 2			
AL-1	Set value of alarm 1	PV alarm, deviation alarm : EU(–100.0 ~ 100.0 %)	Always on	EU(100.0 %)
AL-2*	Set value of alarm 2			EU(0.0 %)

7 Retransmission (RET) group

Symbol	Parameter	Option	Available condition	Default
G.trn	RET. Group	Options for RET. Group	–	–
rEt	Retransmission type or power for sensor	Process value(PV) / set value (SV) / output amount (MV) / power for sensor (SPS)	RET. option	PV
rEtH	High limit of retransmission	TC / RTD : FR-H ~ FR-L DC voltage : SL-H ~ SL-L But, RET.H 〉 RET.L	PV / SV	EU(100.0 %)
rEtL	Low limit of retransmission			EU(0.0 %)

8 Communication group

Symbol	Parameter	Option	Available condition	Default
G.Con	Communication group	Options for communication mode.	–	–
P-rS	RS 485 / RS 422 Protocol	PC.LINK (code : 0) PC.LINK SUM (code : 1) MODBUS-ASCII(code : 2) MODBUS-RTU (code : 3)	Comm. Option	0
bPS	Communication speed (B.P.S)	2400(code : 2), 4800(code : 3), 9600(code : 4), 14400(code : 5), 19600(code : 6)		4
Pri	Parity Bit	NONE(code : 0), EVEN(code : 1), ODD(code : 2)		1
StP	Stop Bit	1bit (code : 1), 2bit (code : 2)		1
dLn	Data length	7bit (code : 7), 8bit (code : 8) (code 8 is not available for PC LINK)		8
Adr	Address	1 ~ 99 but, max 31 units		1
rP.t	Response time	0 ~ 10. Response time = (processing time + response time) X 10 ms		0

9 Output group

⚠ Caution

Please make sure to choose "input code" in "input code setting" of the input group first and then select "output code" in "output type setting" and other options in other groups. If other options are selected first and then input code is changed to other input code, the options in the other groups will be changed.

Symbol	Parameter	Option	Available condition	Default
G.oUt	Output group	Options for output type and mode	–	–
oUt	Output type setting	Refer to "control output composition"	Always on	(0 / 3)
o.ACt	Output operation	REV: reverse, DIR: direct	Output code 0~3	REV
Ct	Cycle time	1 ~ 1000 s	relay / SSR	30 s
CtC	Cycle time for cooling	1 ~ 1000 s	Output code 4~12	30 s
HYS	Hysteresis for normal type	EUS (0.0 ~ 100.0 %)	ON/OFF control	EUS(0.5 %)
SET	Hysteresis for heating-cooling type	0.0 ~ 10.0 %	Heating-cooling	0.5 %
Po	Output amount of OUT1 when input break	Normal : -5.0 ~ 105.0 % Heating-cooling: 0.0 ~ 105.0 %	Always on	0.0 %
PoC	Output amount of OUT2 when input break	0.0 ~ 105.0 %	Heating-cooling	0.0 %
oL-H	High limit of output amount	Normal : OL-L + 1Digit~ 105.0 % Heating-cooling : 0.0 ~ 105.0 %	PID control	100.0 %
oL-L	Low limit of output amount	Normal : -0.5 % ~ OL-H-1Digit	PID control	0.0 %
		Heating-cooling : 0.0 ~ 105.0 %		100.0 %

10 Input group

Symbol	Parameter	Option	Available condition	Default
G.In	Input group	Options for input type and input mode	–	–
InP	Input code setting	Input signal and measurable range code	Always on	Code : 1
Unit	Temperature unit setting	℃ / ℉	TC or RTD	℃
Fr-H	High limit setting	Within range (refer to "input code for input type and range") but, FR-H 〉 FR-L	Always on	1370
Fr-L	Low limit setting		Always on	-200
SET dP-P	Decimal point position (voltage input)	Fixed for TC or RTD / DC voltage: 0 ~ 3 setting for decimal point position	Voltage input (mV,V)	1
SL-H	High limit of scale (voltage input)	-1999 ~ 9999 but, SL-H 〉 SL-L	Voltage input (mV,V)	100.0
SL-L	Low limit of scale (voltage input)	decimal point according to DP-P		0.0
FILt	Process value filter	OFF / 1 ~ 120 sec	Always on	OFF
bIAS	Process value bias (compensation)	EUS(-100.0 ~ 100.0 %)	Always on	EUS(0.0 %)
b.oUt	Operation after input break (burn-out)	OFF / UP / DOWN	Always on	UP

Dimension and panel cutout

HX2

● Dimension

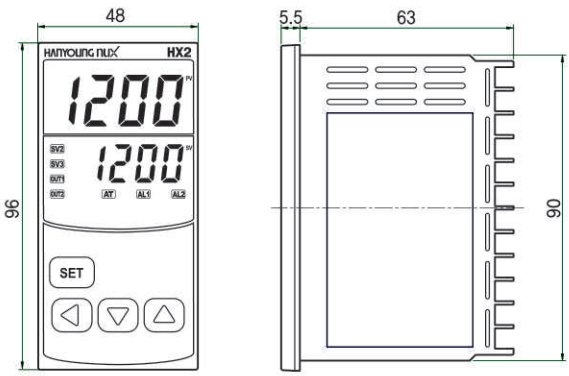

● Panel cutout

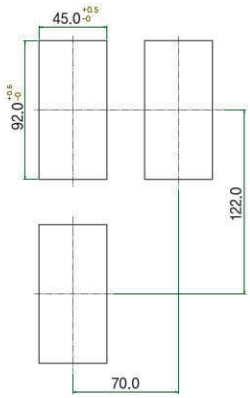

HX3

● Dimension

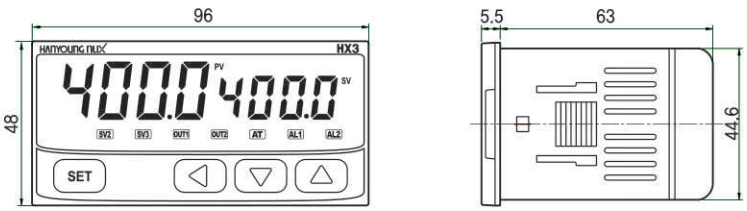

● Panel cutout

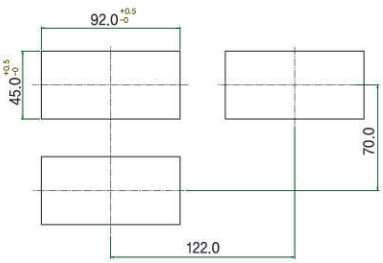

HX4

● Dimension

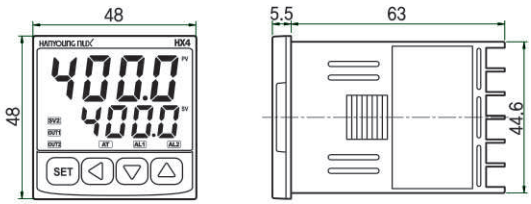

● Panel cutout

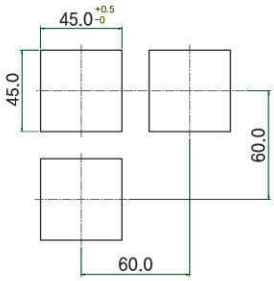

HX7

● Dimension

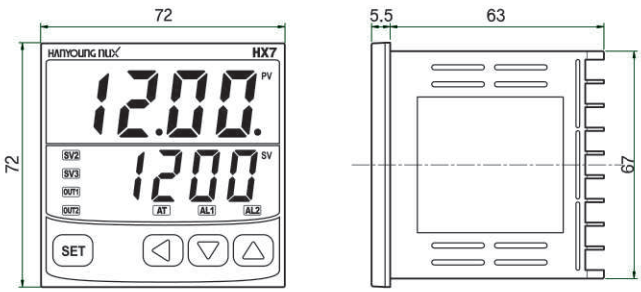

● Panel cutout

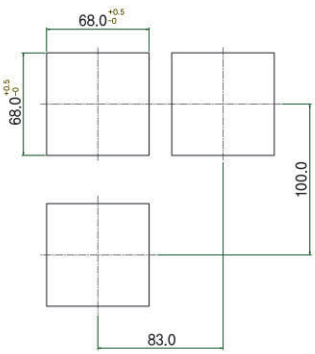

HX9

● Dimension

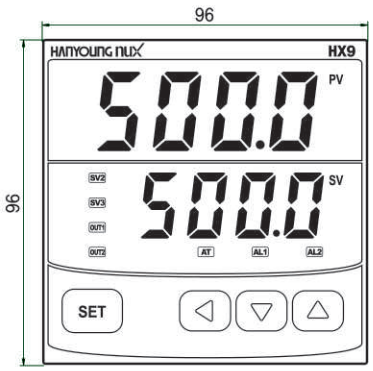

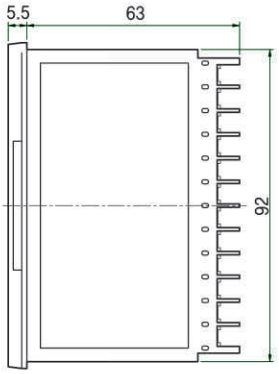

● Panel cutout

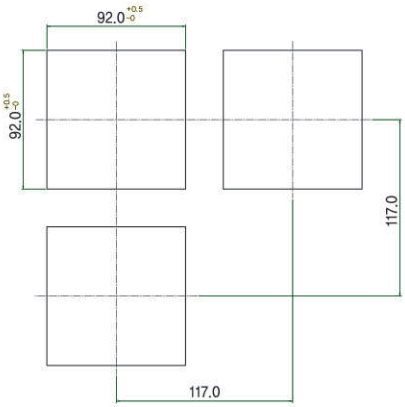

CT-50N

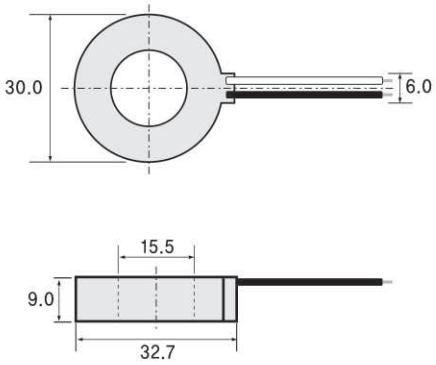

Bracket

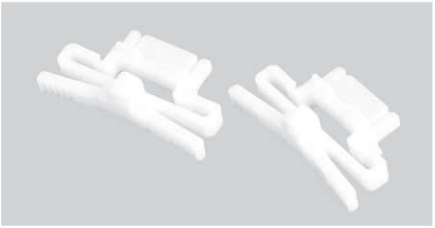

Connection diagram

(Unit : mm)

● HX2

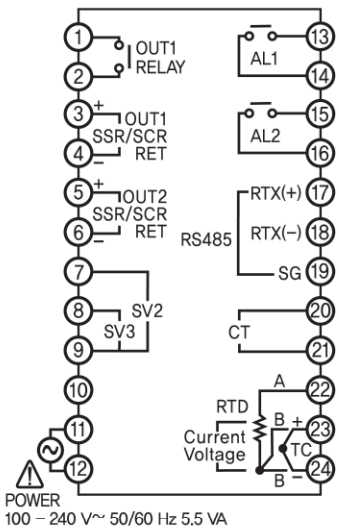

● HX7

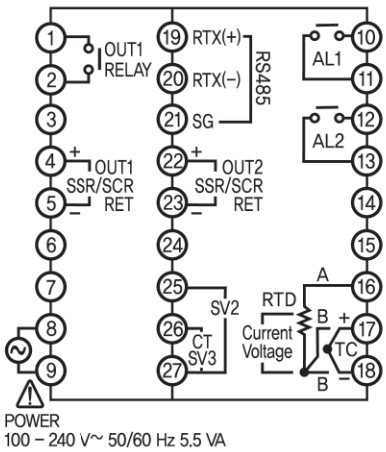

● HX3

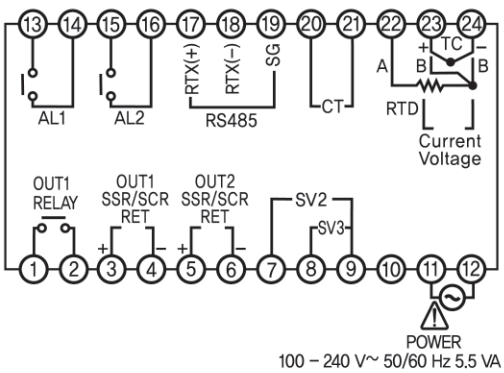

● HX9

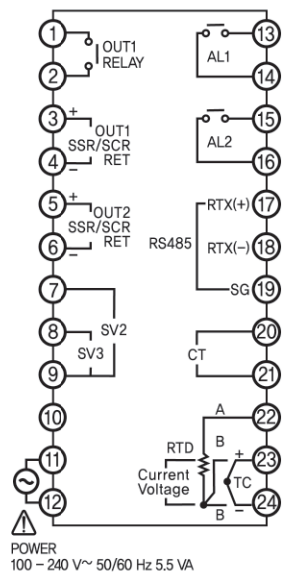

● HX4

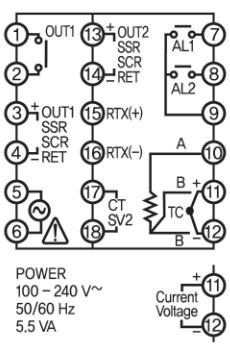

AX Series

Digital temperature controller

- Multi input (K, J and Pt100 Ω are selectable)
- Multi output (Relay and SSR are selectable)
- High speed sampling cycle (0.1 sec)
- Installation depth : 63 mm
- Control loop break alarm (LBA)

Suffix code

Model		Code		Description	
AX	□ –	□	□	Digital temperature controller	
Dimension	2			AX2 : 48 X 96 ㎜	
	3			AX3 : 96 X 48 ㎜	
	4			AX4 : 48 X 48 ㎜	
	7			AX7 : 72 X 72 ㎜	
	9			AX9 : 96 X 96 ㎜	
Output selection		1		SSR + Relay1 + Relay2	Relay or SSR as control output (selectable in operator setup mode)
		2		SSR + Relay1 + Relay2 + Relay3	
		3		4 – 20 ㎃ + Relay2	Current output as control output
		4		4 – 20 ㎃ + Relay2 + Relay3	
Power supply voltage			A	100 – 240 V AC 50 / 60 Hz	

※ Relay output operates as control output, alarm output and LBA output depending on the internal parameter setting.

Specification

Input

Input selection	Multi input • Thermocouple : K, J, R, T (IEC) • RTD : Pt100 Ω (IEC)
Input sampling time	0.1 s
Input impedance	1 ㏁ max
Allowable wiring resistance	10 Ω / 1wire max(RTD). but resistances among 3 wires should be same
Allowable input voltage	10 V DC max

Performance

Display accuracy	±0.3 % of FS ±1 digit (In case of R type, ±1.0 % of ±1 digit in the 0 ~ 600 ℃ range)
Insulation resistance	More than 20 ㏁, 500V DC for 1min (Primary terminal-Secondary terminal)
Dielectric strength	2300V AC 50/60Hz, for 1 min (Primary terminal-Secondary terminal)

Range and input code

Classification	Code	Input type	Range	
			Celsius(℃)	Fahrenheit(℉)
Thermocouple	K1	K	-100 ~ 1200 ℃	-148 ~ 2192 ℉
	K2		-100.0 ~ 500.0 ℃	-148 ~ 932 ℉
	J	J	-100.0 ~ 500.0 ℃	-148 ~ 932 ℉
	r	R	0 ~ 1700 ℃	32 ~ 3092 ℉
	t	T	-100.0 ~ 400.0 ℃	-148 ~ 752 ℉
RTD	Pt	Pt 100 Ω	-100.0 ~ 400.0 ℃	-148.0 ~ 752.0 ℉

Control function and output

Control type	PID control, P control, ON/OFF control	
Auto-tuning	PID operation by the auto-tuning	
ON/OFF control	When PV 〉 SV, it generates 0 % output. When PV 〈 SV, it generates 100 % output. (Only when control hysteresis is 0)	
Manual reset	Users set within the range from 0 % to 100 %	
Control output operation	Direct action/Reverse action (selected by the parameter setting)	
Control output	Relay output/voltage pulse output (SSR output) * Selected by the parameter setting)	
Relay	1a contact (Resistive load)	
	Relay output can be selected maximum 3 and relay control output is displayed as RLY1. Alarm output 2 contacts (AL1, AL2) and LBA output are assigned by the users among RLY1, RLY2 and RLY3	
SSR	CYC	12 – 15 V DC pulse voltage (Resistive load min 600 Ω)
	PHA	
4 – 20 ㎃	Accuracy : 0.5 % of FS, Ripple Vp-p : 0.3 % of FS, Resistive load : Max 600 Ω	

Specification

Model	AX2	AX3	AX4	AX7	AX9
Power supply voltage	100 – 240 V AC 50/60 Hz				
Voltage fluctuation	±10 % of power supply voltage				
Power consumption	5.5 VA max				
Ambient temperature	-5 ~ 50 ℃				
Ambient humidity	35 ~ 85 % RH (But without dew condensation)				
Vibration (resistance)	10 – 55 Hz, 0.75 ㎜, X Y Z each in X, Y and Z directions for 2 hour				
Shock (resistance)	300 m/s² to 6 directions each 3 times				
Weight	320 g	320 g	180 g	300 g	400 g

※ Weight included the weight of box

Function and name of each part

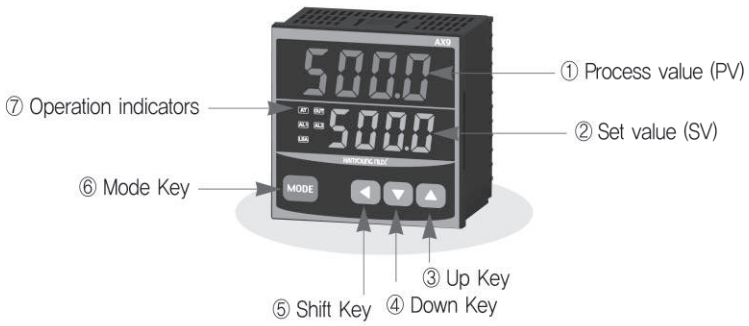

No	Model		Description
①	Process value (PV)		• Display the current temperature in the operation screen
②	Set value (SV)		• Display the set temperature in the operation screen
③	▲	Up Key	• Change the operation screen, increase the set value, move to the parameter setting mode
④	▼	Down Key	• Decrease the set value, move to the parameter setting mode
⑤	◀	Shift Key	• Shift to the set value digits • Move from operation screen – users • Move from operator – setting mode
⑥	MODE	Mode Key	• Move from operation screen – users • Move from operator – setting mode
⑦	AT	Operation indicators	• Light ON with the PID auto tuning
	OUT		• Light ON with the control output operation
	AL1		• Light ON with the Alarm1 operation
	AL2		• Light ON with the Alarm2 operation
	LBA		• Light ON with the Loop break alarm operation

Important function explanation

■ Heating / Cooling output action selection

Able to select the reverse action (heating control) or direct action (cooling control) output by the Ctrd parameter

■ PID auto tuning (A.T) function

Auto tuning function measures, computes and sets the optimum PID or ARW constant automatically. After supplying power in and while temperature is increasing, press the set key MODE and ▲ key synchronously for 2 sec. to begin the auto tuning. When auto tuning is finished, tuning operation will be ended automatically.

■ ON/OFF control setting method

Usually temperature controller performs the temperature control by "PID control method" which is done by the PI auto tuning. However, ON/OFF control method is used when controlling the refrigerator, fan, solenoid valve and etc. When users want to set the temperature controller as ON/OFF control mode, set the setting value of proportional band as Ctrn within the "general setting parameter."
Here, HYS (hysteresis) parameter will be displayed. Prevent such action to occur by setting the desired ON/OFF action range.

■ bout display

When input break (sensor break) occurs or exceeds the maximum temperature range, bout will be displayed in the measured value displaying unit.

■ Output terminal and output signal

• RLY signal allocation

AX Series has maximum 3 relay contact output. These 3 relay contact outputs are called as RLY1 to RLY3. Please refer to the connection diagram for the terminal position. The control signal and alarm signal are generated from the RLY1. Selecting the rLY in the oCtr parameter will yield the control signal in the RLY1. Selecting the SSr in the oCtr parameter will able users to select the alarm signal and make the output. Users can select the alarm signal and make the output in the RLY2 and RLY3.

■ Alarm

• Using the alarm

AX Series supports 2 independent alarms (AL1 and AL2). These alarms can allocate AL1 or AL2 signal in the RLY1, RLY2 and RLY3 and be used. If alarm signal is not allocated in the RLY1 to RLY3 then the menu related to the alarm will not be displayed.

• Alarm hold action

If there is no standby action function, supply the power in then the LOW alarm will become ON while temperature is increasing.
In order to prevent the low alarm to become ON during temperature is increasing, add the standby action function so from the point when supplying in the power to until the value goes beyond the set value, it can prevent the low alarm to be operated.

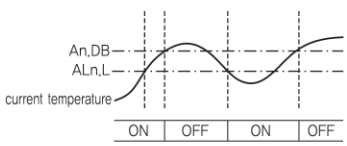

Not using the alarm standby mode
(An.HD=OFF)

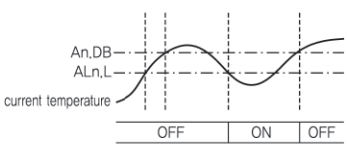

Using the alarm standby mode
(An.HD=ON)

• Alarm output LOCK

It the AnoK value is ON, Alarm is not cancelled even if it becomes the alarm cancel condition.
If users want to stop the alarm forcedly, please press the ▲ key for approx 2 sec.

■ LBA (Loop Break Alarm)

LBA function starts to measure time from the moment when the PID computed value becomes 0 % or 100 %. Also, from this point, this function detects heater break, sensor break manipulator malfunction and etc by comparing the changed amount of measured value in each set time. Also, it can set the LBA dead band in order to prevent any malfunction to happen in the normal control loop.

① **When control output value which obtained by PID operation is 100 %,**
If the temperature does increase more than LbAu value within the LBA set time, LBA output will become ON

② **When control output value which obtained by PID operation is 0 %,**
If the temperature does decrease more than LbAu value within the LBA set time, LBA output will become ON

■ Time share cycle control and phase control of Voltage pulse output

When selecting the control output type as SSR, users will be able to select the types for voltage pulse output. The timeshare cycle control turns ON/OFF the output by proportioning the certain time to an output amount in cycle. Set the cycle of control output in the Ct parameter.
Within the half cycle of power wave shape, the phase control (depending on an output amount) controls an output amount by computing the output ON phase. However, when using the phase control, users must use the RANDOM ON/OFF type SSR.

Control type	Load current with 50 % of output
Phase control	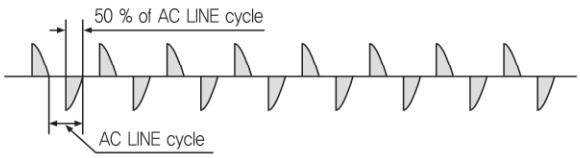
Timeshare cycle control	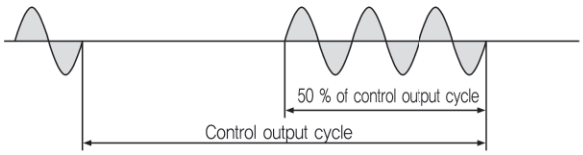

Parameter composition

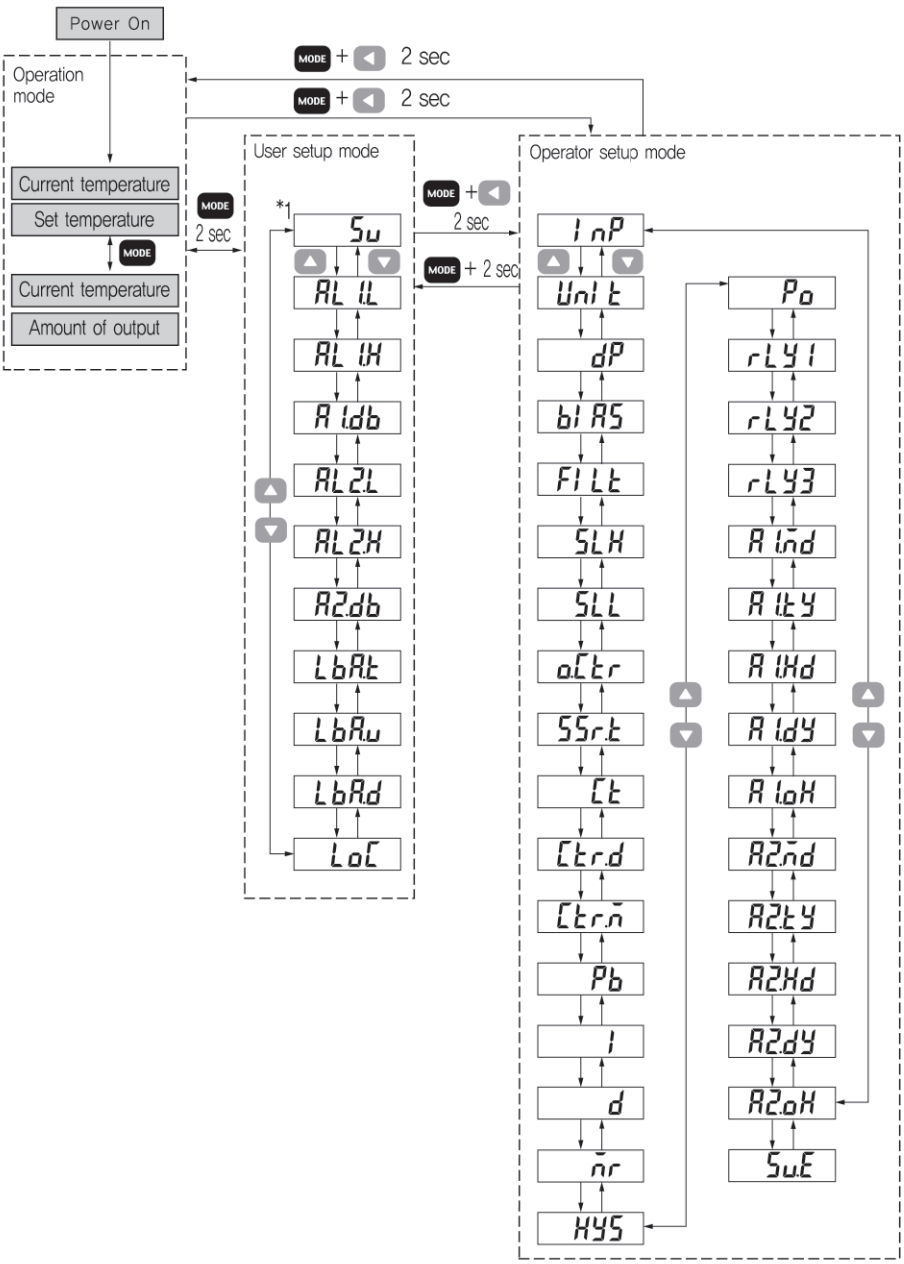

■ Operation mode

Supplying in the power after finish wiring will display the current temperature. Pressing the MODE key will display the set temperature and output amount alternatively on the set value (SV) displaying unit.

■ User setup mode

User setup mode is the setting mode that sets the set value that is changed by users frequently such as alarm set value and loop break alarm (LBA). It made the parameter of user setup mode to be displayed on the operator setup mode that allows users to set easily (divided the setting level).

■ SV setting

① In Operator Setup Mode, When the value of SuE parameter is on, you can change the value with ◀, ▼, ▲ and press the MODE key to set up.

② In operator Setup Mode, When the value of SuE is oFF, you can change the value in Su parameter with ◀, ▼, ▲ and Press MODE key to set up.

Symbol (PV)	Lists	Description	Display condition	Default value
Su	set temperature	EU 0 ~ 100 %	at all times	EU 0 %
AL 1L	Alarm 1 low value	EU 0 ~ 100 % or EUS 0 ~ 100 % (temperature unit)	When RLYn ALn is set	EU 0 %
AL 1H	Alarm 1 high value			EU 100 %
A 1db	Alarm 1 dead zone			EUS 0 %
AL 2L	Alarm 2 low value			EU 0 %
AL 2H	Alarm 2 high value			EU 100 %
A2db	Alarm 2 dead zone			EUS 0 %
LbAt	Loop break alarm time	0 ~ 7200 sec	When LBA is set in the RLYn	480
LbAu	Loop break alarm temperature	0 ~ 100 ℃ (℉)		2
LbAd	Loop break alarm dead zone	0 ~ 100 ℃ (℉)		2
LoC	KEY lock	0 : NO LOCK function	at all times	0
		1 : Operator setup mode LOCK, Auto-tuning prohibited		
		2 : Operator and user setup mode LOCK		

■ Operator setup mode

Operator setup mode is the setting mode that sets the specification of temperature controller when engineer installs it for the first time. Pressing the MODE key and ◀ key synchronously in the operation screen or user setup mode will enter into the operator setup MODE and ◀ keys one more time for 2 sec will return to the operation screen.

Symbol (PV)	Lists	Description	Display condition	Default value
InP	Input condition	K1 : K thermocouple (Not display the decimal points) K2 : K thermocouple (Displays the decimal points) J : J thermocouple r : R thermocouple t : T thermocouple Pt : RTD Pt 100 Ω	At all times	K1
Unit	Temperature unit	℃ / ℉ option	At all times	°C
dP	Decimal point	ON(YES) OFF(NO)	Select decimal point	on
bIAS	Input compensation	-100 ~ 100(sensor input value + BIAS)	At all times	0
FILt	Input filter time	0 ~ 120 sec	At all times	0
SLH	High setting limitation	EU 0 ~ 100 %	At all times	1200
SLL	Low setting limitation	EU 0 ~ 100 %	At all times	-100
oCtr	Control output type	SSr: SSR operating voltage pulse output rLY: Relay output	When output selection 1 or 2	SSr
SSr.t	Voltage pulse output type	CYC: timeshare proportional control PHA: SSR phase control (continuously proportioning)	When selected SSR control output	CYC
Ct	Control output cycle	0 ~ 1000 sec	When SSr.t is CYC or oCtr is RLY	2
Ctr.d	Control output action	rEu : Reverse action (heating control) dir : Direct action (cooling control)	At all times	rEu
Ctr.m	Control type	PId : PID control P : P control (proportional control) onoF: ON/OFF control	At all times	PId
Pb	Proportional band	1 (0.1) ~ EUS 100 %	When it is not ON/OFF	30
I	Integral time	0 ~ 3600 sec	Control\With PID control	240
d	Derivative time	0 ~ 3600 sec	With PID control	60
mr	Manual reset	0.0 ~ 100.0 %	With P control	50.0
HYS	Control hysteresis	EUS 0 ~ 100 %(Temperature unit)	With ON/OFF control	2
Po	Output amount with input brea	0 ~ 100 %	At all times	0.0
rLY1	Relay 1 property	non : Not using AL1 : Alarm 1 output AL2 : Alarm 2 output LbA : LBA output	When output selection is 1 or 2 and oCtr is not RLYY	non

Symbol (PV)	Lists	Description	Display condition	Default value
rLY2	Relay 2 property	non : Not using AL1 : Alarm 1 output AL2 : Alarm 2 output LbA : LBA output	At all times	AL1
rLY3	Relay 3 property	non : Not using AL1 : Alarm 1 output AL2 : Alarm 2 output LbA : LBA output	At all times (Option)	AL2
A1md	Alarm 1 mode (Alarm 1 or 2)	non : Not using ---[: High alarm]--- : Low alarm -[]- : Alarm within range]--[: Alarm not within range	When AL1 or AL2 is set in RLY 1, 2, 3	---[
A2md	Alarm 2 mode (Alarm 1 or 2)			]---
A1tY	Alarm 1 type	AbS : ABS(Absolute alarm)		AbS
A2tY	Alarm 2 type	dEu : DEV(Deviation alarm)		AbS
A1Hd	Alarm 1 standby mode	oFF : OFF(not using the standby mode)		oFF
A2Hd	Alarm 2 standby mode	on : ON(using the standby mode)		oFF
A1dY	Alarm 1 delay time	0 ~ 9999 sec		0
A2dY	Alarm 2 delay time			0
A1oH	Alarm 1 output LOCK	oFF : Alarm output return action		oFF
A2oH	Alarm 2 output LOCK	on : Alarm output maintain action		oFF
SuE	Change SV on the operation	oFF : No change SV on : Change SV	At all times	on

Dimension and panel cutout

AX2

● Dimension

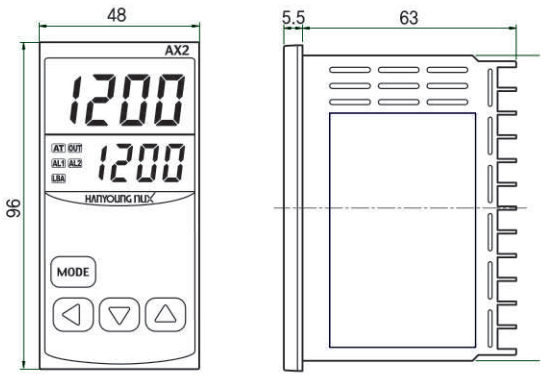

● Panel cutout

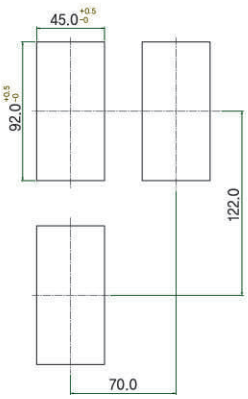

AX3

● Dimension

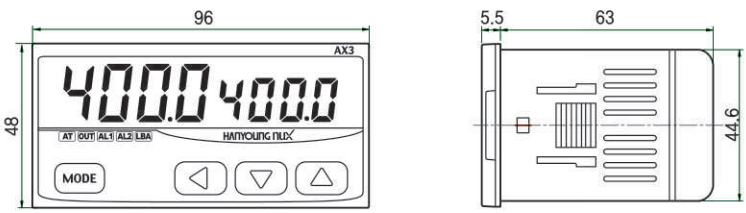

● Panel cutout

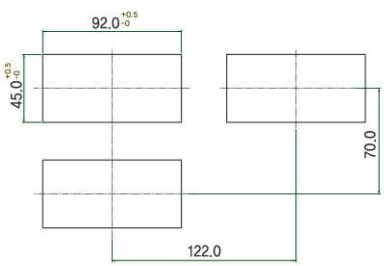

AX4

● Dimension

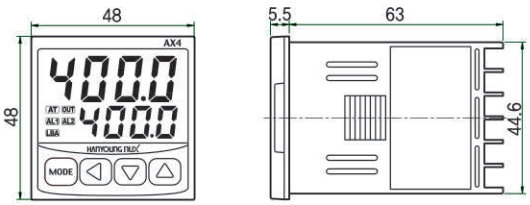

● Panel cutout

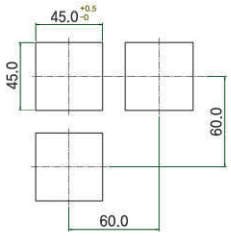

AX7

● Dimension

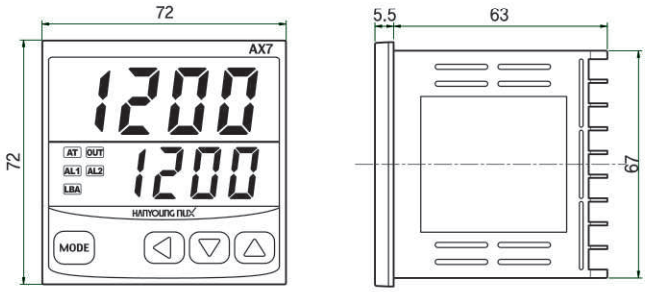

● Panel cutout

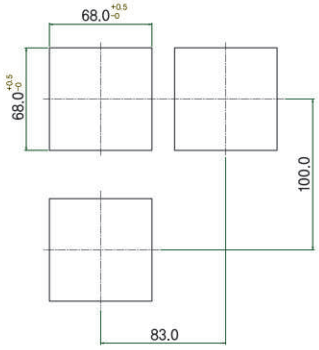

AX9

● Dimension

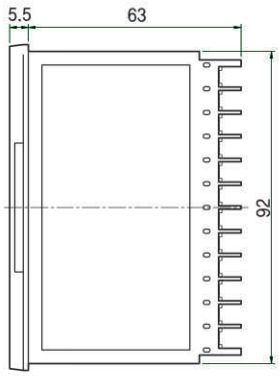

● Panel cutout

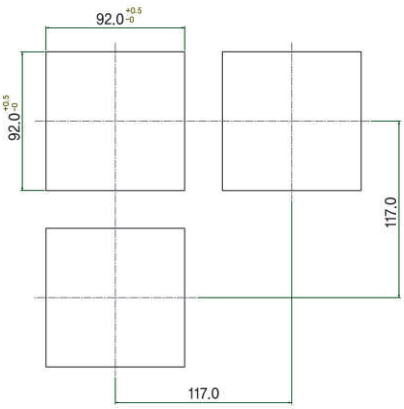

Connection diagram (unit : ㎜)

● AX2

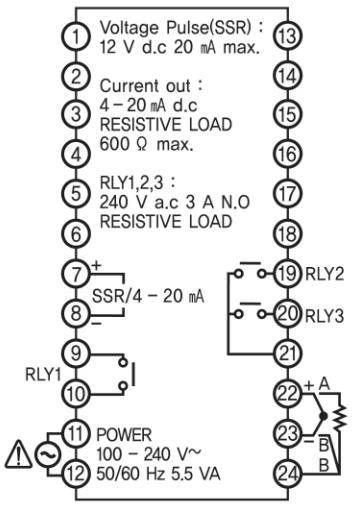

● AX7

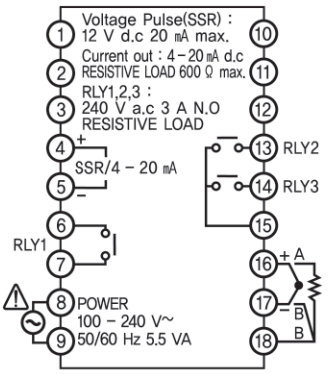

● AX3

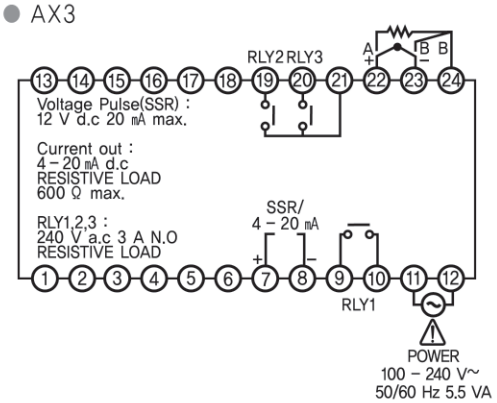

● AX9

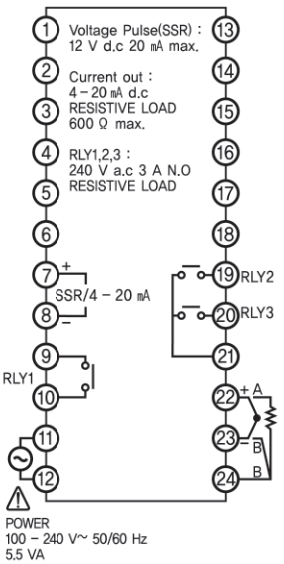

● AX4

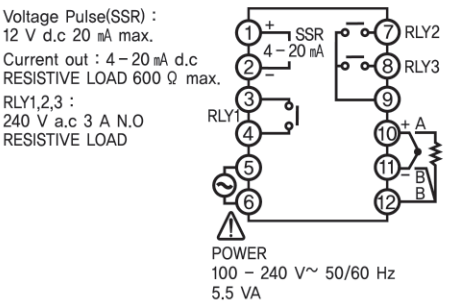

PX Series

Digital temperature controller

- Fuzzy function, PID auto tuning
- 3 zone PID / Group PID 3 kinds
- Programmable function
  (1 pattern / 10 segments)
- Heating / Cooling control,
  Heater Break Alarm (HBA)
- 3 types of set value selection by the contact input(DI)
- Communication function (RS485 / 422)
- Remote input function (4 – 20 mA DC)

Suffix code

Model		Code		Description
PX	□ –	□	□	Multi input/output temperature controller
Dimension	7			72(W) X 72(H) ㎜
	9			96(W) X 96(H) ㎜
Control type		0		Universal type (possible to select either the reverse operation or direct operation)
		1		Heating/cooling control (synchronous control output)
Option			0	NONE
			1	PX7 : RS485/422, OUT2, REM (Remote input : 4 – 20 mA DC) PX9 : RS485/422, HBA 2 Contact, REM (Remote input : 4 – 20 mA DC)
			2	RS485/422, OUT2, HBA 1 Contact
			3	Contact input (DI), OUT2, HBA 1 Contact

(Cautious) 1) PX9 can be applied with only option number 1
2) PX7 can be applied with all of the option choices.
3) PX7–1□ (Heating/Cooling control) need consulting when using relay for cooling control output.

Specification

Input

Thermocouple	K, J, E, T, R, B, S, L, N, U, W, PL2
RTD input	KPt 100 Ω, Pt 100 Ω
DC rated voltage	1 – 5 V DC, –10 ~ 20 ㎷, 0 – 100 ㎷, 4 – 20 ㎃ (attach 250 Ω external resistance)
Input sampling time	250 ㎳ (with remote selection : 500 ㎳)
Input display resolution	Usually less than the decimal points of range
Input impedance	Min 1 ㏁ (thermocouple, DC voltage input)
Allowable signal source resistance	Max 250 Ω (thermocouple input), Max 2 ㎏ (DC voltage input)
Allowable wiring resistance	Max 10 Ω (RTD input)
Allowable input voltage	±10 V (thermocouple, RTD, DC voltage : ㎷), ±20 V (DC voltage : V)
Scaling	–1999 ~ 9999 (SL–H 〉 SL–L)
Cold junction compensation error	±1.5 ℃ (15 ~ 35 ℃), ±2.0 ℃ (0 ~ 50 ℃)
Input signal break detection	UP Scale/DOWN Scale selection (thermocouple input). UP Scale (RTD input)

Performance

Display accuracy	±0.1 % of FS ±1 Digit. thermocouple (K, J, E, T, L, U, W, PL2) ±0.15 % of FS ±1 Digit. thermocouple (R, B, S) ±0.2 % of FS ±1 Digit. thermocouple (N) ±0.1 % of FS ±1 Digit. RTD (KPt100 Ω, Pt100 Ω), DC voltage
External power supply	24 V DC. 20 ㎃ max. (Cannot be used when using retransmission output)
Insulation resistance	Min 20 ㏁ (500 V DC) 1st terminal–2nd terminal–between the earth terminal)
Dielectric strength	2,300 V AC, 50 / 60 ㎐, 1minute (1st terminal–2nd terminal–between the earth terminal) 1,500 V AC, 50 / 60 ㎐, 1minute (2nd terminal–between the F.G)

Control function and output

Control type	PID auto tuning
Control action	a) temporal selection of reverse action (heating) and direct action (cooling) (due to the selection of parameter) b) heating/cooling synchronous control
Range setting	Same as the input range chart
Contact input (DI)	Select 3 kinds of set temperatures that had been set in advance as an external contact.
Auto tuning 2 types	Target value/low target value auto tuning selection
Proportional band	0.1 ~ 999.9 % (heating/cooling type : 0.0 ~ 999.9 %)
Integral time	OFF, 1 ~ 6,000 sec
Differential time	OFF, 1 ~ 6,000 sec
A.R.W(Anti Reset Windup)	Auto, 50.0 ~ 200.0 %(proportional band)
ON/OFF control	Select the output types by parameter

PID selection	Zone PID/group PID selection
Control mode selection	Local/Programmable remote input selection
Manual reset	Possible to set as manual reset when integral time is OFF
Output with input break	Set an amount of output when input breaks
Regular type hysteresis	0.0 ~ 100.0 % of FS (ON/OFF control output, alarm output, HBA output)
Heating/cooling type hysteresis	0.0 ~ 100.0 % of FS (ON/OFF Control output)
Heating/cooling dead zone setting	-100.0 ~ 50.0 % (proportion band)
Fuzzy operation	Fuzzy operation selection by parameter
Programmable control	Select the control mode by parameter (1pattern/10segments)
Retransmission output	Present value/set value/amount of output/external power supply (24 V DC, 20 ㎃ Max) selection
Retransmission output scaling	Set the present value/set value/amount of output scaling
HBA	Possible to use it with the output of ON/OFF control and time proportional control. (However it cannot be used with the current output and cooling output and detecting is impossible when output ON/OFF time is less than 0.2 sec)
Alarm type	22 types (selection by parameter)

● Output

Control output	Relay	1C contact, 240 V AC, 3 A, 30 V DC 3 A (resistive load) Time resolving power : smaller one between 0.1 % and 10 ㎳
	SSR	Approx. more than 24V DC (min 600 Ω resistive load) with disconnection, limit within approx. 30 ㎃. Time resolving power : smaller one between 0.1 % and 10 ㎳
	SCR	4 - 20 ㎃ DC (resistive load less than 600 Ω) Accuracy : ± 0.3 % of FS (range 4-20 ㎃) Time resolving power : approx. 3,000
Alarm output	Temperature alarm (relay)	2 X 1a contact (PX7). 3 X 1a contact (PX9) 240 V AC, 3 A, 30 V DC 3 A (resistive load) Measurement current range : 1 - 50 A AC (resolving power : 0.5 A, ±5 % of FS ±1 Digit) (Cautious) when using the cooling output as relay, alarm output is decreased with 1 contact C.T type for HBA : model CTL-6-S
	HBA (relay)	
Retransmission output	RET	4 - 20 ㎃ DC (resistive load less than 600 Ω) Accuracy : ±0.3 % of FS (range 4 - 20 ㎃) Resolving power : approx. 3,000

● Output composition (multi output)

Regular type	Output selection (OT)	OUT1	OUT2	
		Relay output	SSR / SCR (current output)	SSR / current output / Retransmission output(RET)
PX9-0 □	0	Relay(ON/OFF control)		RET
PX7-0 □	1		SSR	

※ PX7 Transfer output is optional

Heating/ cooling type	Output selection (OT)	Heating side(OUT1)		Cooling side(OUT2)	
		Relay output	SSR / SCR	Relay output	SSR / SCR / RET
PX9-1 □ PX7-1 □	4		SSR		SSR
	5		SCR		SSR
	6	Relay	RET		SSR
	7		SSR		SCR
	8		SCR		SCR
	9	Relay	RET		SCR (4 – 20 ㎃ DC)
	10		SSR	AL3	RET
	11		SCR	AL3	RET
	12	Relay	–	AL3	RET

General specification

Power supply voltage	100 – 240 V AC 50 / 60 ㎐
Voltage fluctuation	±10 % of power supply voltage
Power consumption	10 VA max.
Ambient temperature	0 ~ 50 ℃
Ambient humidity	35 ~ 85 % RH (without dew condensation)
Storage temperature	-25 ~ 70 ℃
Vibration resistance	10 – 55 ㎐, Peak amplitude 0.75 for 2 mins each in 3 axis direction
Shock resistance	300 ㎧, 3 times each in 3 axes direction
Weight	Approx. 472 g(PX9), approx. 344 g(PX7)

Input signal and measurement range

Input signal	Number	Input types	Range (℃)	Accuracy
Thermocouple (TC)	1	K	−200 ~ 1370 ※2	±0.1 % of FS ±1 digit
	2	K	−199.9 ~ 999.9 ※2	
	3	J	−199.9 ~ 999.9 ※2	
	4	E	−199.9 ~ 999.9 ※2	
	5	T	−199.9 ~ 400.0 ※2	
	6	R	0 ~ 1700 ※2	±0.15 % of FS ±1 digit
	7	B	0 ~ 1800 ※1	
	8	S	0 ~ 1700	
	9	L	−199.9 ~ 900.0 ※2	±0.1 % of FS ±1 digit
	10	N	−200 ~ 1300	±0.2 % of FS ±1 digit
	11	U	−199.9 ~ 400.0 ※2	± 0.1 % of FS ±1 digit
	12	W	0 ~ 2300	
	13	PL2	0 ~ 1390	
RTD	20	Pt100 Ω	−199.9 ~ 500.0 ※3	± 0.1 % of FS ± 1 digit
	21	Pt100 Ω	−199.9 ~ 640.0 ※3	
DC voltage (V DC / ㎷ DC)	30	1 − 5 V	Scaling set (−1999 ~ 9999)	± 0.1 % of FS ± 1 digit
	32	−10 − 20 ㎷		
	33	0 − 100 ㎷		
DC Current	30※	4 − 20 ㎃		

※1 : 0 ~ 400 ℃ range : ±5 % of FS ±1 digit

※2 : Max 0 ℃ : ±0.2 % of FS ±1 digit

※3 : −150.0 ~ 150.0 range : ±0.2 % of FS ±1 digit

※ When using 4 − 20 ㎃ current input, please attach 0.1 % of 250 Ω resistance to both input signal

Dimension and panel cutout (unit : ㎜)

PX9

● Dimension

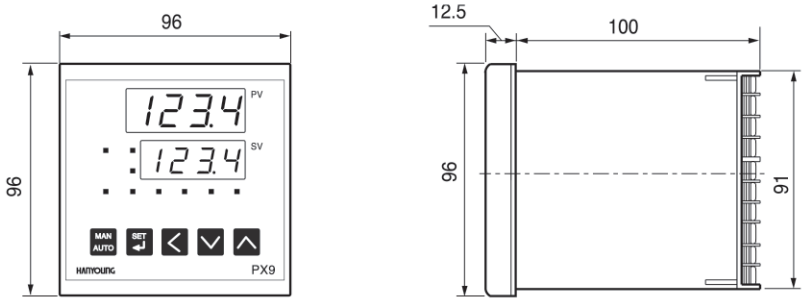

● Panel cutout

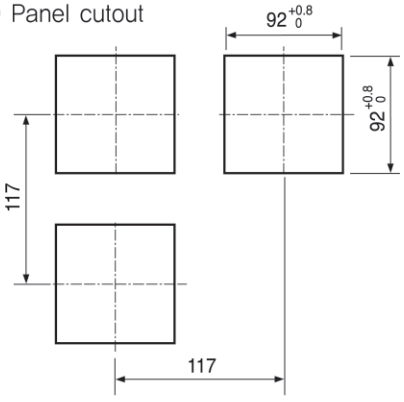

PX7

● Dimension

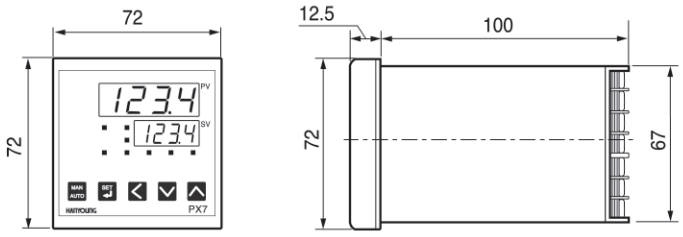

● Panel cutout

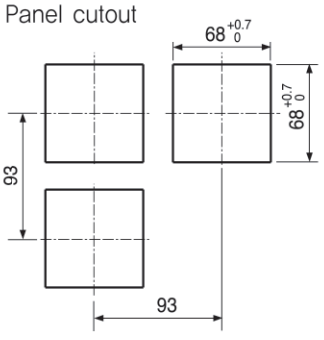

Connection diagram

● PX9 (96 × 96)

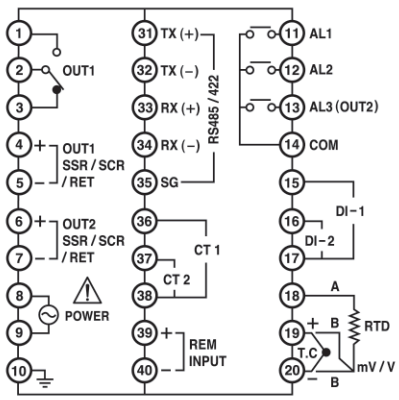

● PX7 (72 × 72)

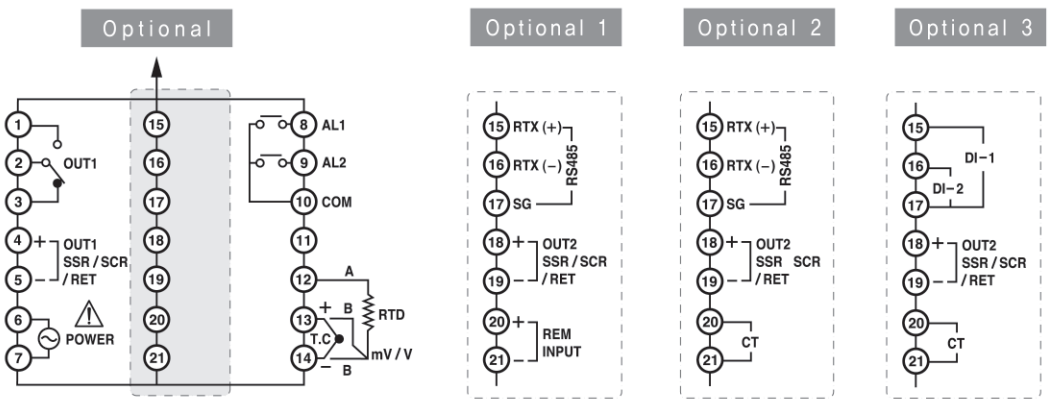

NX2, 3, 7, 9

Multi input/Output digital temperature controller

- Fuzzy function, PID auto tuning
- 3 zone PID/ group PID 3 types
- Ramp control function
- Heating/cooling control, HBA
- 3 types of set value selection by the contact input(DI)
- Communication function (RS485/422)

Suffix code

Model		Code		Description
NX-	□	□	□	Multi input/Output temperature controller
Dimension	2			48(W) X 96(H) ㎜
	3			96(W) X 48(H) ㎜
	7			72(W) X 72(H) ㎜
	9			96(W) X 96(H) ㎜
Control method		0		Universal type (heating control)
		1		Heating/Cooling control (synchronously)
NX9 Optional			0	NONE
			1	RS485, HBA
NX7 Optional			0	NONE
			1	RS485, HBA
			2	SV2, SV3, HBA
NX2,NX3 Optional			0	SV2, SV3
			1	HBA
			2	RS485

(Cautious) Suffix code for NX4 and NX1 are provided separately

Specification

Input

Thermocouple	K, J, E, T, R, B, S, L, N, U, W, PL2
RTD input	KPt 100 Ω, Pt 100 Ω
DC rated voltage	1 – 5 V DC, –10 – 20 ㎷, 0 – 100 ㎷, 4 – 20 ㎃ (attach 250 Ω external resistance)
Input sampling time	250 ㎳
Input resolution	Usually less than the decimal points of "measurement range chart"
Input impedance	Thermocouple and DC rated voltage (㎷) : min 1 ㎆, DC voltage input (V) : approx. 1 ㎆
Allowable signal source resistance	Thermocouple (max 250 Ω), DC voltage (Max 2 ㎏)
Allowable wiring resistance	RTD (max 10Ω, however resistance among 3 wires should be same)
Allowable input voltage	Within ±10 V (thermocouple, RTD, DC voltage (㎷)), within ±20 V (DC voltage (V))
Scaling	–1999 ~ 9999 (SL–L ~ SL–H within)
Input compensation	–100.0 % ~ 100.0 % of FS
Cold junction compensation error	±1.5 ℃ (15 ~ 35 ℃), ±2.0 ℃ (0 ~ 50 ℃)
Input signal break detection	OFF, UP/DOWN Scale selection (thermocouple). UP Scale (RTD)

Performance

Display accuracy	±0.5 % of FS ±1 Digit, thermocouple (K, J, E, T, R, B, S, L, U, W, PL2)
	±1.0 % of FS ±1 Digit, thermocouple (N)
	±0.5 % of FS ±1 Digit, RTD (KPt100 Ω, Pt100 Ω), DC voltage
External power supply	24 V DC, max. 20 ㎃ (cannot be used when using the retransmission output)
Insulation resistance	Min 20 ㎆ (500 V DC), 1st terminal–2nd terminal–between the earth terminal.
Dielectric strength	2,300 V AC, 50 / 60 ㎐, for 1 min (1st terminal–2nd terminal–between the earth terminal)
	1,500 V AC, 50 / 60 ㎐, for 1 min (2nd terminal–between the F.G)

Communication (optional)

Communication Rating	RS–422 (4–wire type), RS–485 (2–wire type)
Protocol	PC Link with Checksum, MODBUS (RTU), MODBUS (ASCII)
Communication speed	2400, 4800, 9600, 14400, 19200 BPS
Max number of Connection	31 devices (address setting is 1 ~ 99)
Communication distance	1.2 km max

Control function and output

Control type	PID auto tuning
Control operation	a) temporal selection of reverse operation (heating) and direct operation (cooling) (By the selection of the parameter) b) heating / cooling synchronous control
Range setting	Refer to the range and input code
Contact input(DI)	Select the 3 types of set temperatures which had been set in advance as external contact.
Auto tuning 2 types	Target value/low target value auto tuning selection
Proportional band	0.1 ~ 999.9 % (heating/cooling type : 0.0 ~ 999.9 %)
Integral time	OFF, 1 ~ 6,000 sec
Differential time	OFF, 1 ~ 6,000 sec
A.R.W(Anti Reset Wind-up)	Auto, 50.0 ~ 200.0 % (proportional band)
ON/OFF control	Selection of output types by parameter
PID selection	Zone PID / group PID selection
Manual reset	Possible to set as a manual reset when integral time is OFF
Output with input break(OUT1)	-5.0 ~ 105.0 (Universal type), 0.0 ~ 105.0 % (heating/cooling type)
Output with input break(OUT2)	0.0 ~ 105.0 %
Regular type hysteresis	0.0 ~ 100.0 % of FS. ON / OFF control
Heating/cooling type hysteresis	0.0 ~ 100.0 % of FS. ON / OFF control
Heating/cooling dead zone setting	-100.0 ~ 50.0 % (proportional band)
Fuzzy function	Fuzzy operation selection by parameter
Ramp function	Select an amount of output slope regarding the set temperature
Retransmission output	Present value/set value/amount of output/external power supply selection (24 V DC, 20 ㎃ max)
Retransmission output scaling	By the limitation of set range or scaling setting
Alarm set range	Range 0 ~ 100 % (absolute alarm), ±100 % (deviation alarms)
Alarm hysteresis	0.0 ~ 100.0 % of range
Heater Break Alarm (HBA)	Possible to use it with the output of ON/OFF control and time proportional control. (However it cannot be used with the current output and cooling output and detection impossible with ON/OFF time less than 0.2 sec) allowable current range : 1 - 50 A AC (resolving power : 0.5 A, ±5 % of FS ±1 Digit) (Cautious) when using the cooling output as relay, alarm output is decreased with 1 contact C.T type for HBA : model CTL-6-S
Alarm type	21 types Set by the Parameters refer to the "alarm type and code"

● Output

Control output	Relay	Contact capacity : 1 C, 240 V AC, 3 A, 30 V DC 3 A (resistive load) But NX1 is 1a Contact, 240 V AC, 1 A, 30 V DC 1 A (resistive load) Time resolving power : smaller one between 0.1% and 10 ㎳
	SSR	More than approx. 12 V DC (Min 600 Ω resistive load), with disconnection, limit within approx. 30 ㎃, Time resolving power : smaller one between 0.1% and 10 ㎳
	SCR	4 - 20 ㎃ DC (resistive load less than 600 Ω) Accuracy : ±0.5 % of FS (range 4 - 20 ㎃ DC) resolving power : approx. 3,000
Alarm output	AL1, AL2, and HBA common	1a 2 contact (NX2, NX3, NX9) 240 V AC, 1 A, 30 V DC 1 A (resistive load)
Retransmission output	RET	4 - 20 ㎃ DC (resistive load less than 600 Ω) Accuracy : ±0.5 % of FS (4 - 20 ㎃ DC) resolving power : approx. 3,000

● Control output composition

	Output selection	Control output(OUT1)		OUT2	
		Relay output	SSR/SCR output	Relay output	Retransmission output
Regular type	0	ON/OFF	–	AL2 (Alarm2 output)	R.E.T (Retransmission output)
	1	–	SSR		
	2	–	SCR (4 – 20 ㎃)		
	3	Relay	–		

	Output selection	Heating side (OUT1)		Cooling side (OUT2)	
		Relay output	SSR/SCR output	Relay output	SSR/SCR/RET
Heating/ Cooling type	4		SSR	AL2 (Alarm2 output)	SSR
	5		SCR (4 – 20 ㎃)		
	6	Relay	R.E.T		
	7		SSR		SCR (4 – 20 ㎃)
	8		SCR (4 – 20 ㎃)		
	9	Relay	R.E.T		
	10		SSR	Relay (Control output)	R.E.T
	11		SCR (4 – 20 ㎃)		
	12	Relay			

Range and input code

Classification	Code	Input	Range	Accuracy
Thermocouple (TC)	1	K	–200 ~ 1,370 *2	±0.5 % of FS ±1 digit
	2	K	–199.9 ~ 999.9 *2	
	3	J	–199.9 ~ 999.9 *2	
	4	E	–199.9 ~ 999.9 *2	
	5	T	–199.9 ~ 400.0 *2	
	6	R	0 ~ 1700 *2	
	7	B	0 ~ 1800 *1	
	8	S	0 ~ 1700	*1 (range 0 ~ 400 ℃) ±10 % of FS ±1 Digit
	9	L	–199.9 ~ 900.0 *2	*2 (less than 0 ℃) ±1.0 % of FS ±1 Digit
	10	N	–200 ~ 1300	±1.0 % of FS ±1 digit
	11	U	–199.9 ~ 400.0 *2	±0.5 % of FS ±1 digit
	12	W	0 ~ 2300	
	13	PL2	0 ~ 1390	*(2 less than 0 ℃) ±1.0 % of FS ±1 Digit
RTD	20*	KPt100 Ω	–199.9 ~ 500.0 *3	±0.5 % of FS ±1 digit
	21*	Pt100 Ω	–199.9 ~ 640.0 *3	
DC voltage	30	1 – 5 V	Scaling set (–1999 ~ 9999)	
	32	–10 – 20 ㎷		
	33	0 – 100 ㎷		
DC current	30*	4 – 20 ㎃		*3 (less than –150.0 ~ 150.0 ℃) ±1.0 % of FS ±1 Digit

※ When using 4 – 20 ㎃ DC current input, please select input code #30 and attach resistance 250 Ω 0.1 % at the both terminal of input terminal

General specification

Power supply	100 – 240 V AC, 50 – 60 Hz
Voltage fluctuation	±10 % of power voltage
Power consumption	10 VA max.
Ambient temperature	0 ~ 50 ℃
Ambient humidity	35 ~ 85 % RH (without dew condensation)
Storage temperature	-25 ~ 65 ℃
Vibration resistance	10 – 55 Hz, peak amplitude 0.75 ㎜ for 2 hrs each in 3 axis direction
Shock resistance	300 m/s², 3 times each in 3 axes direction
Weight	Approx. 472 g (NX9), approx. 344 g (NX7), approx. 340 g (NX3), approx. 342 g (NX2)

Dimension and panel cutout (Unit : ㎜)

NX9

● Dimension

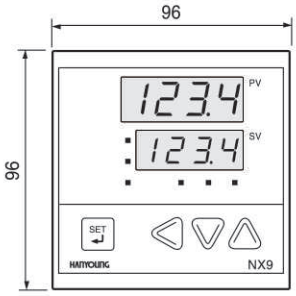

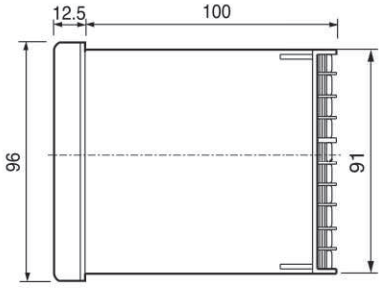

● Panel cutout

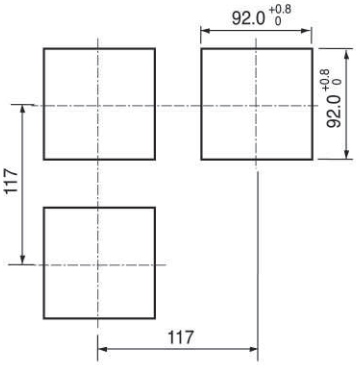

NX2

● Dimension

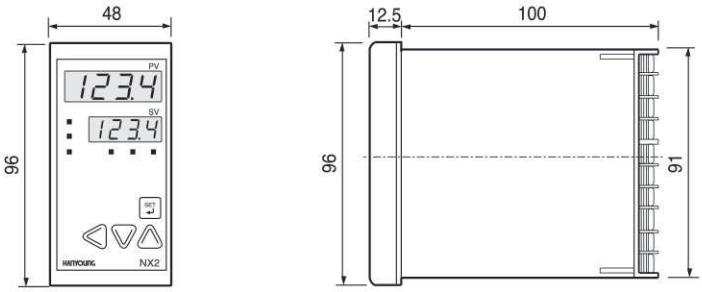

● Panel cutout

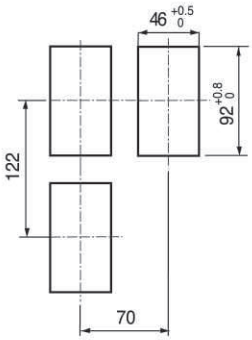

NX7

● Dimension

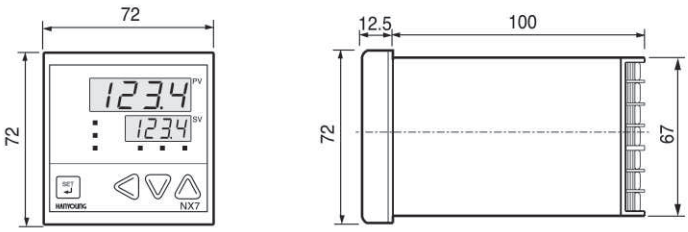

● Panel cutout

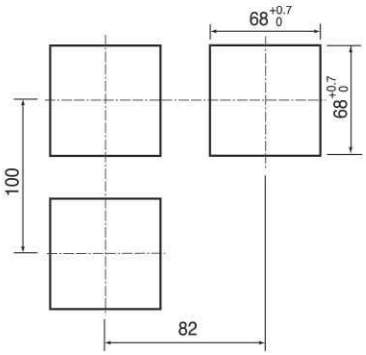

NX3

● Dimension

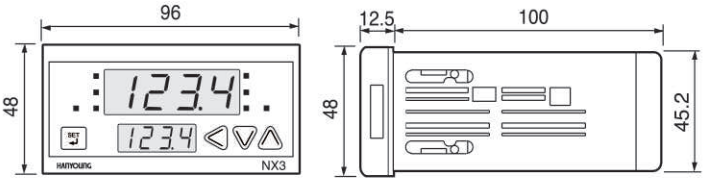

● Panel cutout

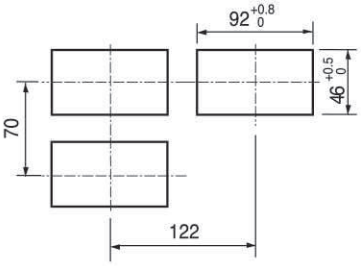

Connection diagram

● NX 2 (48 × 96)

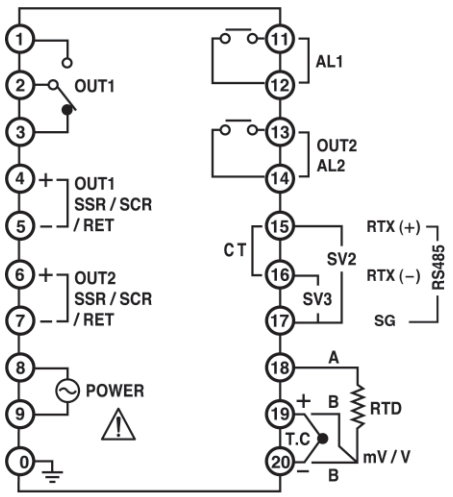

● NX 3 (96 × 48)

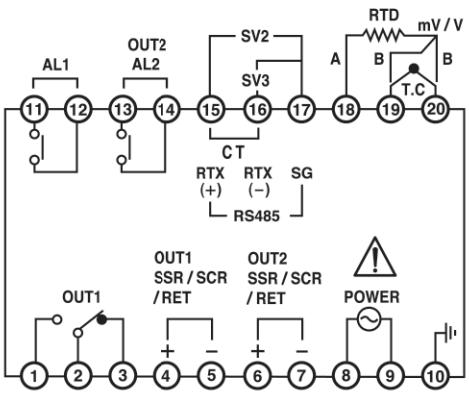

● NX 7 (72 × 72)

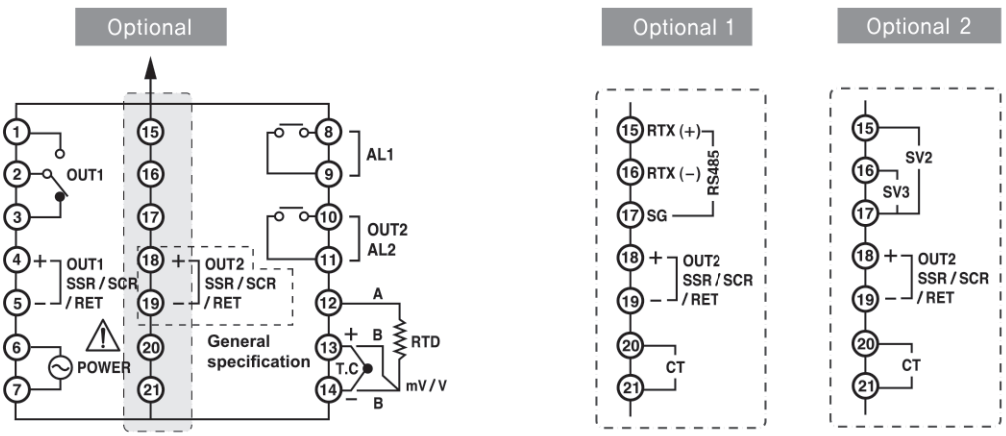

● NX9 (96 × 96)

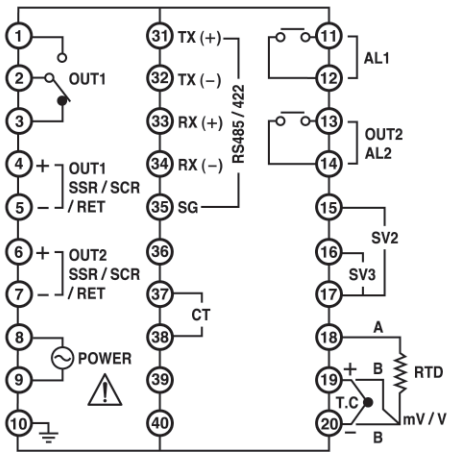

Current detector (Unit : ㎜)

● CT-50N

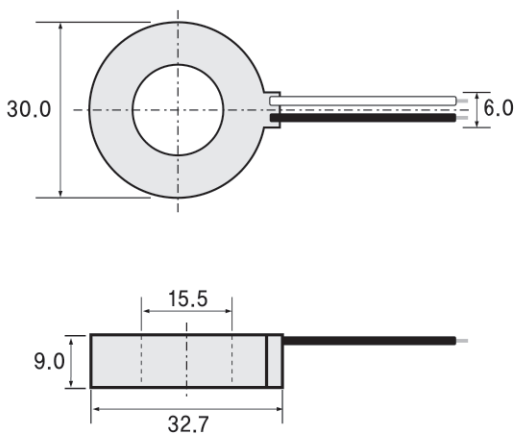

Alarm type and code

(Cautious) : Display lamp will be ON when output becomes OFF in inverted type.

Hysteresis  (△ : Set value, –▲ : minus alarm set value, ▲ : alarm set value)

Code number	Alarm type	Operation diagram
1	high absolute (proper)	
2	low absolute (proper)	
3	high deviation (proper)	
4	low deviation (proper)	
5	high deviation (Inverted)	
6	low deviation (Inverted)	
7	high/low deviation	
8	within high/low deviation	
9	high absolute (Inverted)	
10	low absolute (Inverted)	
11	high absolute (proper, hold function)	
12	low absolute (proper, hold function)	
13	high deviation (proper, hold function)	
14	low deviation (proper, hold function)	
15	high deviation (Inverted, hold function)	
16	low deviation (Inverted, hold function)	
17	high/low deviation (hold function)	
18	within high/low deviation (Hold function)	
19	high absolute (Inverted, hold function)	
20	low absolute (Inverted, hold function)	
21	heater break alarm 1 (HBA 1)	

NX4

Multi input/Output digital temperature controller

- Fuzzy function, PID auto tuning
- 3 zone PID / group PID 3 types
- Ramp control function
- Heating / cooling control, HBA
- 3 types of set value selection due to the contact input
- Communication function (RS485 / 422)

Suffix code

Model	Code		Description
NX4-	□	□	Multi input / output temperature controller, 48(W) X 48(H)
Control type	0		Universal type (heating control)
	1		Heating / cooling control (synchronous control)
	2		Heating / cooling control (only for NX4-20)
NX4 option		0	NONE
		1	HBA, AL2
		2	SV2, SV3
		3	RET, RS485
		4	RS485, SSR / SCR
		5	AL1, AL2
		6	AL1, AL2, SV2
		7	RS485, HBA

(Cautious) Option 1: OUT1 (terminal ①-②-③) is applied as AL1 But, only with control output SSR/SCR selection
Option 3: OUT2 (terminal ⑪-⑫) is applied as RET
Option 4: OUT2 (terminal ⑪-⑫) is applied as SSR / SCR
Option 5: OUT1 (terminal ⑥-⑦) is impossible to apply as SV2
Option 6: OUT1 (terminal ⑥-⑦) is applied as SV2 but only with relay control output.

Specification

Input

Thermocouple	K, J, E, T, R, B, S, L, N, U, W, PL2
RTD input	KPt 100 Ω, Pt 100 Ω
DC rated voltage	1 – 5 V DC, –10 – 20 ㎷, 0 – 100 ㎷, 4 – 20 ㎃ (attach 250 Ω external resistance)
Input sampling time	250 ㎳
Input display resolution	Usually less than the decimal points of "measurement range chart"
Input impedance	Thermocouple and DC rated voltage (㎷) : min 1 ㎆, DC rated voltage (V) : approx 1 ㎆
Allowable signal source resistance	Thermocouple (max 250 Ω), DC voltage (Max 2 ㎏)
Allowable wiring resistance	RTD (max 10Ω, however resistance among 3 wires should be same)
Allowable input voltage	Within ±10 V(thermocouple, RTD, DC voltage (㎷)), within ±20 V (DC voltage (V))
Scaling	–1999 ~ 9999 (within SL–L ~ SL–H)
Input compensation	–100.0 % ~ 100.0 % of FS
Cold junction compensation error	±1.5 ℃ (15 ~ 35 ℃), ±2.0 ℃ (0 ~ 50 ℃)
Input signal break detection	OFF, UP/DOWN Scale selection (thermocouple). UP Scale (RTD)

Performance

Display accuracy	±0.5 % of FS± 1 Digit, thermocouple (K, J, E, T, R, B, S, L, U, W, PL2)
	±1.0 % of FS± 1 Digit, thermocouple (N)
	±0.5 % of FS± 1 Digit, RTD (KPt100 Ω, Pt100 Ω), DV voltage
External power supply	12 V DC, 20 ㎃ max. (cannot be used when using the Retransmission output)
Insulation resistance	Min 20 MΩ (500 V DC), between 1st terminal–2nd terminal–earth terminal
Dielectric strength	2,300 V AC, 50 / 60 ㎐, for 1 min (between 1st terminal–2nd terminal–earth terminal)
	1,500 V AC, 50 / 60 ㎐, for 1 min (between 2nd terminal–F.G)

Communication (optional)

Communication Rating	RS–422 (4–wire type), RS–485 (2–wire type)
Protocol	PC Link with Checksum, MODBUS (RTU), MODBUS (ASCII)
Communication speed	2400, 4800, 9600, 14400, 19200 BPS
Max number of Connection	31 devices (address setting is 1 ~ 99)
Communication distance	1.2 km max

Control function and output

Control type	PID auto tuning control type
Control action	**a)** temporal selection of reverse action (heating) and direct action (cooling)
	(due to the selection of parameter) **b)** heating/cooling synchronous control
Range setting	Same as input range chart
Contact input (DI)	Select 3 types of set temperatures which had been set in advance as external contact.
Auto tuning 2 types	Target value/low target value auto tuning selection
Proportional band	0.1 ~ 999.9 % (heating/cooling type : 0.0 ~ 999.9 %)
Integral time	OFF, 1 ~ 6,000 sec
Differential time	OFF, 1 ~ 6,000 sec
A.R.W(Anti Reset Wind-up)	Auto, 50.0 ~ 200.0 % (Proportional band)
ON/OFF control	Select the output types by parameter
PID selection	Zone PID/group PID selection
Manual reset	Possible to set as manual reset when integral time is OFF
Output with input break(OUT1)	-5.0 ~ 105.0 (regular type), 0.0 ~ 105.0 % (heating/cooling type)
Output with input break(OUT2)	0.0 ~ 105.0 %
Regular type hysteresis	0.0 ~ 100.0 % of FS. but, ON/OFF control
Heating/cooling type hysteresis	0.0 ~ 100.0 % of FS. but, ON/OFF control
Heating/cooling dead zone setting	-100.0 ~ 50.0 % (proportional band)
Fuzzy function	Fuzzy function selected by parameter
Ramp function	Select the amount of output slope regarding the set temperature (set value(℃)/time(min.)
Retransmission output	Present value/set value/amount of output/external power supply (12 V DC, 20 ㎃ max) selection
Retransmission output scaling	By the limitation of set range or scaling setting
alarm set range	0 ~ 100 % of range (absolute alarm), ±100 % (deviation alarm)
Alarm hysteresis	0.0 ~ 100.0 % of range
Heater Break Alarm(HBA)	Possible to use it with the output of ON/OFF control and time proportional control. (However it cannot be used with the current output and cooling output (detection is impossible when output ON/OFF time is less than 0.2sec) measurement current range : 1 - 50 A AC (resolving power : 0.5 A, ±5 % of FS ±1 Digit) (Cautious) when using the cooling output as relay, alarm output is decreased with 1 contact C.T type for HBA : model CT-50N
Alarm type	Select by parameter of 21 types, refer to "alarm type and code"

● Output

Control output	Relay	Contact capacity : 1 C, 240 V AC, 3 A, 30 V DC 3 A (resistive load) But NX1 is 1 a Contact, 240 V AC, 1 A, 30 V DC 1 A (resistive load) Time resolving power : smaller one between 0.1 % and 10 ㎳
	SSR	Approx. more than 12 V DC (min 600 Ω resistive load) with disconnection, limit within approx 30 ㎃. Time resolving power : smaller one between 0.1 % and 10 ㎳
	SCR	4 – 20 ㎃ DC (resistive load less than 600 Ω) Accuracy : ±0.5 % of FS (range4 – 20 ㎃), time resolving power : Approx. 3,000
Alarm output	AL1, AL2, and HBA common	1a 2 contacts 240 V AC, 1 A, 30 V DC 1 A (resistive load)
Retransmission output	RET	4 – 20 ㎃ DC (resistive load less than 600 Ω) Accuracy : ±0.5 % of FS (4 – 20 ㎃ range), resolving power : Approx. 3,000

● Regular type control output composition

Regular type (heating)	Output selection	OUT1 (heating side)		Alarm and current transformer	
		Relay ①–②–③	SSR/SCR ⑥–⑦	Relay ⑬–⑭	⑪–⑫
NX4–00	0	Relay (ON/OFF)	–	–	–
	1	AL1	SSR	–	–
	2		SCR (4 – 20 mA)	–	–
	3	Relay (PID)	–	–	–

Regular type (heating)	Output selection	OUT1 (heating side)		Alarm and current transformer	
		Relay ①–②–③	SSR/SCR ⑥–⑦	Relay ⑬–⑭	⑪–⑫
NX4–01	0	Relay (ON/OFF)	–	AL2	–
	1	AL1	SSR		CT
	2		SCR (4 – 20 ㎃)		–
	3	Relay (PID)	–		CT

※ Selecting number 21 in alarm type will assign HBA output will be designated as ①–②–③ terminal or ⑬–⑭ terminal

Regular type (heating)	Output selection	OUT1 (heating side)		External input (DI)	
		Relay ①–②–③	SSR/SCR ⑥–⑦	Relay ⑬–⑭	Relay ⑪–⑫
NX4–02	0	Relay (ON/OFF)	–	SV2	SV3
	1	AL1	SSR		
	2		SCR (4 – 20 ㎃)		
	3	Relay (PID)	–		

Regular type (heating)	Output selection	OUT1 (heating side)		Communication and Retransmission	
		Relay ①–②–③	SSR/SCR ⑥–⑦	Relay ⑬–⑭	Relay ⑪–⑫
NX4–03	0	Relay (ON/OFF)	–	Communication function (RS 485)	Retransmission output (RET)
	1	AL1	SSR		
	2		SCR (4 – 20 ㎃)		
	3	Relay (PID)	–		

Regular type (heating)	Output selection	OUT1 (heating side)		Communication	
		Relay ①-②-③	SSR/SCR ⑥-⑦	Relay ⑬-⑭	Relay ⑪-⑫
NX4-04	0	Relay (ON/OFF)	-	communication function (RS485)	-
	1	AL1	SSR		
	2		SCR (4 - 20 mA)		
	3	Relay (PID)	-		

Regular type (heating)	Output selection	OUT1 (heating side)		Alarm output	
		Relay ①-②-③	SSR/SCR ⑥-⑦	Relay ⑬-⑭	Relay ⑪-⑫
NX4-05	0	Relay (ON/OFF)	-	AL1	AL2
	1	-	SSR		
	2		SCR (4 - 20 mA)		
	3	Relay (PID)	-		

Regular type (heating)	Output selection	OUT1 (heating side)		Alarm output	
		Relay ①-②-③	⑥-⑦	Relay ⑬-⑭	Relay ⑪-⑫
NX4-06 (AL1, AL2) (SV2)	0	Relay (ON/OFF)	SV2	AL1	AL2
	1	-	-		
	2				
	3	Relay (PID)	SV2		

Regular type (heating)	Output selection	OUT1 (heating side)		Communication and current transformer	
		Relay ①-②-③	SSR/SCR ⑥-⑦	⑬-⑭	⑪-⑫
NX4-07 (RS485) (HBA)	0	Relay (ON/OFF)	-	communication function (RS485)	-
	1	AL1	SSR		CT
	2		SCR		-
	3	Relay (PID)	-		CT

● Heating/Cooling type control output composition

Heating/ cooling	Output selection	heating side (OUT1)		cooling side (OUT2)	
		Relay ①-②-③	SSR/SCR ⑥-⑦	Relay ⑬-⑭	Relay ⑪-⑫
NX4-10	4	AL1	SSR	-	SSR
	5		SCR		
	6	Relay	-		
	7	AL1	SSR	-	SCR
	8		SCR		
	9	Relay	-		

Heating/ cooling	Output selection	Heating side (OUT1)		Communication	Cooling side (OUT2)
		Relay ①-②-③	SSR/SCR ⑥-⑦	⑬-⑭	⑪-⑫
NX4-14	4	AL1	SSR	Communication function (RS485)	SSR
	5		SCR (4 – 20 ㎃)		
	6	Relay	–		
	7	AL1	SSR		SCR (4 – 20 ㎃)
	8		SCR (4 – 20 ㎃)		
	9	Relay	–		

※ Limits only with heating / cooling control

Heating/ cooling	Output selection	Heating side (OUT1)		Cooling side (OUT2)	
		Relay ①-②-③	SSR/SCR ⑥-⑦	Relay ⑬-⑭	Relay ⑪-⑫
NX4-20	10	AL1	SSR	AL1	Relay
	11		SCR (4 – 20 ㎃)		
	12	Relay	–		

Range and input code

Classification	Code	Input	Range	Accuracy
Thermocouple (TC)	1	K	-200 ~ 1,370 *2	±0.5 % of FS ±1 digit
	2	K	-199.9 ~ 999.9 *2	
	3	J	-199.9 ~ 999.9 *2	
	4	E	-199.9 ~ 999.9 *2	
	5	T	-199.9 ~ 400.0 *2	
	6	R	0 ~ 1700 *2	
	7	B	0 ~ 1800 *1	
	8	S	0 ~ 1700	
	9	L	-199.9 ~ 900.0 *2	
	10	N	-200 ~ 1300	±1.0 % of FS ±1 digit
	11	U	-199.9 ~ 400.0 *2	±0.5 % of FS ±1 digit
	12	W	0 ~ 2300	
	13	PL2	0 ~ 1390	
RTD	20	KPt100 Ω	-199.9 ~ 500.0 *3	±0.5 % of FS ±1 digit
	21	Pt100 Ω	-199.9 ~ 640.0 *3	
DC voltage	30	1 – 5 V	scaling set (-1999 ~ 9999)	
	32	-10 – 20 ㎷		
	33	0 – 100 ㎷		
DC current	30	4 – 20 ㎃		

*1 range 0 ~ 400 ℃ : ±10 % of FS ±1 Digit

*2 less than 0 ℃ : ±1.0 % of FS ±1 Digit

*3 less than -150.0 ~ 150.0 ℃ : ±1.0 % of FS ±1 Digit

※ When using 4 – 20 mA DC current input, please select input code #30 and attach resistance 250 Ω 0.1% at the both terminal of input terminal

General specification

Power supply voltage	100 – 240 V AC, 50 – 60 Hz
Voltage fluctuation	±10 % of power supply voltage
Power consumption	10 VA max.
Ambient temperature	0 ~ 50 ℃
Ambient humidity	35 – 85 % RH (without dew condensation)
Storage temperature	–25 ~ 65 ℃
Vibration resistance	10 – 55 Hz, Peak amplitude 0.75 ㎜ for 2 hrs each in 3 axis direction
Shock resistance	300 ㎧, 3 times each in 3 axes direction
Weight	342 g

Dimension and panel cutout (Unit : ㎜)

● Dimension

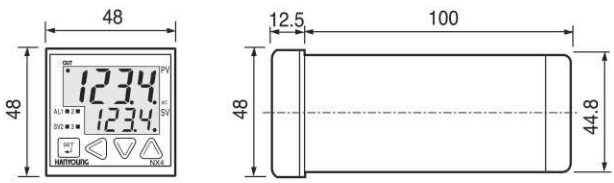

● Panel cutout

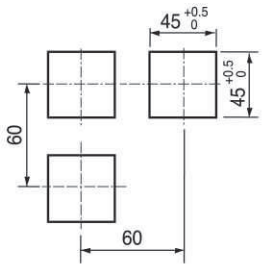

Connection diagram

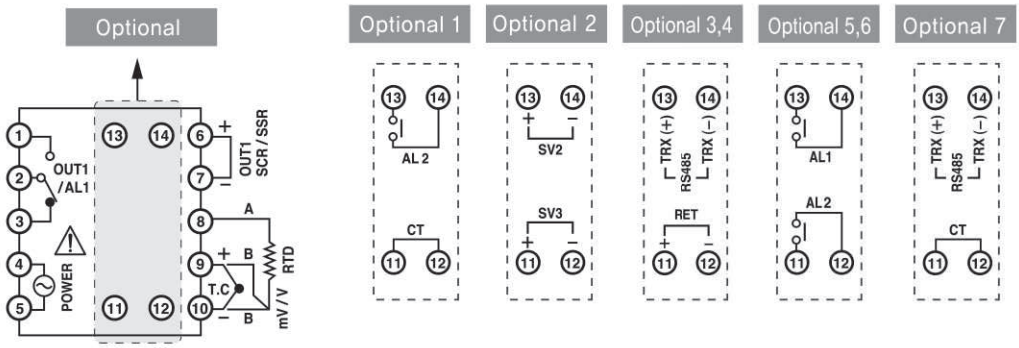

Model: NX4-10

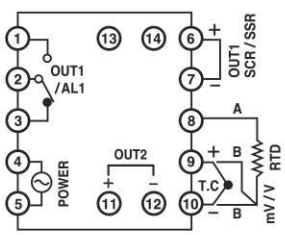

Model : NX4-10

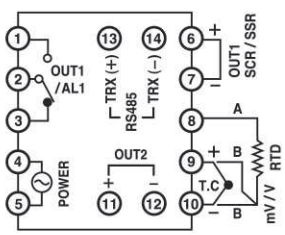

Model : NX4-14

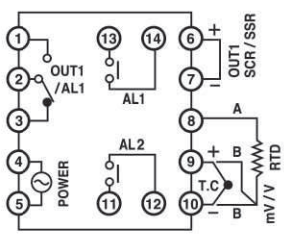

Model : NX4-20

Alarm type and code

Cautious) : Display lamp will be ON when output becomes OFF in inverted type.

Hysteresis  (△ : Set value, -▲ : minus alarm set value, ▲ : alarm set value)

Code number	Alarm type	Operation diagram
1	high absolute (proper)	
2	low absolute (proper)	
3	high deviation (proper)	
4	low deviation (proper)	
5	high deviation (Inverted)	
6	low deviation (Inverted)	
7	high/low deviation	
8	within high/low deviation	
9	high absolute (Inverted)	
10	low absolute (Inverted)	
11	high absolute (Proper, Hold function)	
12	low absolute (Proper, Hold function)	
13	high deviation (Proper, Hold function)	
14	low deviation (Proper, Hold function)	
15	high deviation (Inverted, hold function)	
16	low deviation (Inverted, hold function)	
17	high/low deviation (hold function)	
18	within high/low deviation (Hold function)	
19	high absolute (Inverted, hold function)	
20	low absolute (Inverted, hold function)	
21	heater break alarm 1 (HBA 1)	

NX1

Multi input/Output digital temperature controller

- Fuzzy function, PID auto tuning
- 3 zone PID / group PID 3 types
- Ramp control function
- Heating / cooling, control
- Communication function(RS485 / 422)

Suffix code

Model	Code		Description		
NX1 –	□	□	Multi input/Output temperature controller. 48(W) X 24(H) ㎜		
Control type	0		Universal type		
	1		Heating/Cooling control (synchronously)		
Regular type options			Type options	Heating output	Cooling output
		0	RET	Relay	–
		1	None	SSR/SCR	–
		2	RS485/RET	Relay	–
		3	RS485	SSR/SCR	–
		4	ALM	SSR/SCR	–
		5	ALM/RS485	SSR/SCR	–
Heating/cooling type options		0	None	Relay	SSR/SCR
		1	None	SSR/SCR	Relay
		2	RS485	Relay	SSR/SCR

(Cautious) Product NX1–□ is able to select the control output among 6, 9, 10 and 11 outputs

Specification

Input

Thermocouple	K, J, E, T, R, B, S, L, N, U, W, PL2
RTD input	KPt 100 Ω, Pt 100 Ω
DC rated voltage	1 – 5 V DC, –10 – 20 ㎷, 0 – 100 ㎷, 4 – 20 ㎃ (attach 250 Ω external resistance)
Input sampling time	250 ㎳
Input display resolution	Usually less than decimal points of the range
Input impedance	Min 1 ㏁ (thermocouple, DC rated voltage)
Allowable Signal source resistance	Max 250 Ω (thermocouple input), Max 2 ㎏ (DC voltage input)
Allowable wiring resistance	Max 10 Ω (RTD input)
Allowable input voltage	Within ±10 V (thermocouple, RTD, DC voltage : ㎷), ±20 V (DC voltage : V)
Scaling	–1999 ~ 9999 (within, SL–H 〉 SL–L)
Cold junction compensation error	±1.5 ℃ (15 ~ 35 ℃), ±2.0 ℃ (0 ~ 50 ℃)
Input signal break detection	UP Scale/DOWN Scale selection (thermocouple input), UP Scale (RTD input)

Performance

Display accuracy	±0.5 % of FS ±1 Digit. thermocouple (K, J, E, T, L, U, W, PL2) ±1.0 % of FS ±1 Digit. thermocouple (N) ±0.5 % of FS ±1 Digit. RTD(KPt100 Ω, Pt100 Ω), DV voltage
External power supply	12 V DC. 20 ㎃ max. (cannot be used when using the retransmitting output)
Insulation resistance	Min 20 ㏁ (500 V DC) 1st terminal–2nd terminal–between the earth terminal
Dielectric strength	Between 2,300 V AC, 50 / 60 ㎐, for 1 min (1st terminal–2nd terminal–earth terminal) 1,500 V AC, 50 / 60 ㎐, for 1 min (between 2nd terminal–F.G)

Control function and output

Control type	PID auto tuning
Control action	a) temporal selection of reverse action (heating) and direct action (cooling) (due to the selection of parameter) b) heating/cooling synchronous control
Range setting	Same as the input range chart
Contact input (DI)	Select 3 types of set temperature which had been set in advance as an external contact.
Auto tuning 2 types	Target value/low target value auto tuning selection
Proportional band	0.1 ~ 999.9 % (heating/cooling type : 0.0 ~ 999.9 %)
Integral time	OFF, 1 ~ 6,000 sec
Differential time	OFF, 1 ~ 6,000 sec
A.R.W(Anti Reset Windup)	Auto, 50.0 ~ 200.0 %(Proportional band)
ON/OFF control	Select the output types by parameter

PID selection	Zone PID/group PID selection
Manual reset	Possible to set as manual reset when integral time is OFF
Output with input break	Set an amount of output when input breaks
Regular type hysteresis	0.0 ~ 100.0 % of FS (ON/OFF control output, alarm output, HBA output)
Heating/cooling type hysteresis	0.0 ~ 100.0 % of FS (ON/OFF control output)
Heating/cooling dead zone setting	-100.0 ~ 50.0 % (proportional band)

● Control output composition

Types	Output selection	Heating control output		Cooling control output	
		⑥-⑦ terminal	④-⑤ terminal	⑥-⑦ terminal	④-⑤ terminal
Regular type	0	Relay (ON/OFF)	RET	-	-
	1	Alarm output	SSR	-	-
	2		SCR(4 - 20 ㎃)		
	3	Relay (PID)	RET	-	-
Heating/ Cooling type	6	Relay	-	-	SSR
	9				SCR(4 - 20 ㎃)
	10	-	SSR	Relay	-
	11		SCR(4 - 20 ㎃)		

Caution) NX1-1* model : Can select Output from 6, 9, 10, 11 of output selection.

General specification

Power supply voltage	100 - 240 V AC 50 - 60 ㎐
Voltage fluctuation	±10 % of power supply voltage
Power consumption	8 VA max.
Ambient temperature	0 ~ 50 ℃
Ambient humidity	35 ~ 85 % RH (without dew condensation)
Storage temperature	-25 ~ 65 ℃
Vibration resistance	10 - 55 ㎐, peak amplitude 0.75 ㎜ for 2 hrs each in 3 axis direction
Shock resistance	300 m/s², 3 times each in 3 axes direction
Weight	94 g

Range and input code

Classification	Code	Input	Range(℃)		Accuracy
Thermocouple (TC)	1	K	−200 ~ 1,370	*2	±0.5 % of FS ±1 digit
	2	K	−199.9 ~ 999.9	*2	
	3	J	−199.9 ~ 999.9	*2	
	4	E	−199.9 ~ 999.9	*2	
	5	T	−199.9 ~ 400.0	*2	
	6	R	0 ~ 1700	*2	
	7	B	0 ~ 1800	*1	
	8	S	0 ~ 1700		
	9	L	−199.9 ~ 900.0	*2	
	10	N	−200 ~ 1300		±1.0 % of FS ±1 digit
	11	U	−199.9 ~ 400.0	*2	±0.5 % of FS ±1 digit
	12	W	0 ~ 2300		
	13	PL2	0 ~1 390		
RTD	20*	KPt100 Ω	−199.9 ~ 500.0	*3	±0.5 % of FS ±1 digit
	21*	Pt100 Ω	−199.9 ~ 640.0	*3	
DC voltage	30	1 – 5 V	scaling set (−1999 ~ 9999)		
	32	−10 – 20 ㎷			
	33	0 – 100 ㎷			
DC current	30*	4 – 20 ㎃			

*1 : range 0 ~ 400 ℃ : ±10 % of FS ±1 Digit

*2 : less than 0 ℃ : ±1.0 % of FS ±1 Digit

*3 : less than −150.0 ~ 150.0 ℃ : ±1.0 % of FS ±1 Digit

※ When using 4 – 20 ㎃ DC current input, please select input code #30 and attach resistance 250 Ω 0.1% at the both terminal of input terminal

Dimension and panel cutout (Unit : ㎜)

● Dimension

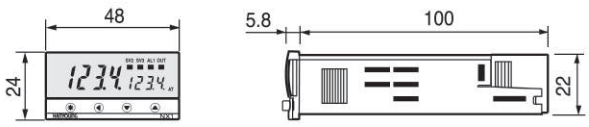

● Panel cutout

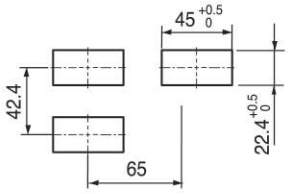

Connection diagram

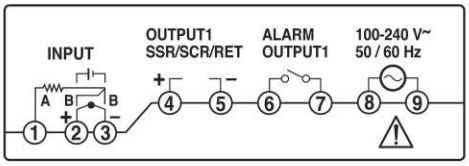

※ RS485/422 communication(wiring length : 300 ㎜)

Black : SG
Red : RTX(+)
White : RTX(−)

Alarm type and code

(Cautious): Display lamp will be ON when output becomes OFF in inverted type.

Hysteresis  (△ : Set value, -▲ : minus alarm set value, ▲ : alarm set value)

Code number	Alarm type	Operation diagram
1	high absolute (Proper)	
2	low absolute (Proper)	
3	high deviation (Proper)	
4	low deviation (Proper)	
5	high deviation (Inverted)	
6	low deviation (Inverted)	
7	high/low deviation	
8	within high/low deviation	
9	high absolute (Inverted)	
10	low absolute (Inverted)	
11	high absolute (Proper, Hold function)	
12	low absolute (Proper, Hold function)	
13	high deviation (Proper, Hold function)	
14	low deviation (Proper, Hold function)	
15	high deviation (Inverted, hold function)	
16	low deviation (Inverted, hold function)	
17	high/low deviation (hold function)	
18	within high/low deviation (Hold function)	
19	high absolute (Inverted, hold function)	
20	low absolute (Inverted, hold function)	

UX100

Multi input/output digital temperature controller

- PID auto tuning.
- Group PID 3 types.
- Scaling and input compensation function.
- Heating/cooling control
- Communication(RS485)

Suffix code

model	code		Description
UX100 –	□	□	Multi input/output temperature controller. 48(W) X 24(H) ㎜
Control type	0		Universal type
	1		Heating/cooling control (but heating side cannot use relay)
Options		0	None
		1	Communication function (RS 485)

Specification

Input

Thermocouple	K, J, E, T, R, B, S, L, N, U, W, PL2
RTD input	Pt 100 Ω, KPt 100 Ω(Old)
DC rated voltage	1 – 5 V DC, –10 – 20 ㎷, 0 – 100 ㎷, 4 – 20 ㎃ (attach 250Ω external resistance)
Input sampling time	250 ㎳
Input display resolution	Usually less than the decimal points of "measurement range chart"
Input impedance	Thermocouple and DC rated voltage (㎷) : min 1 ㏁, DC voltage input (V) : approx 1 ㏁
Allowable signal source resistance	Thermocouple (max 250 Ω), DC voltage (Max 2 ㎏)
Allowable wiring resistance	RTD (max 10Ω, however resistance among 3 wires should be same)
Allowable input voltage	Within ±10 V (thermocouple, RTD, DC voltage (㎷)), within ±20 V (DC voltage (V))
Scaling	0.0 % ~ 100.0 % of FS (SL–L ~ SL–H within)
Input compensation	–100.0 % ~ 100.0 % of FS
Cold junction compensation error	±1.5 ℃ (15 ~ 35 ℃), ±2.0 ℃ (0 ~ 50 ℃)
Input signal break detection	OFF, UP/DOWN Scale selection (thermocouple), UP Scale (RTD)

Performance

Display accuracy	±0.5 % of FS ±1 Digit. thermocouple (K, J, E, T, L, U, W, PL2) ±1.0 % of FS ±1 Digit. thermocouple (N) ±0.2 % of FS ±1 Digit. RTD(KPt100 Ω, Pt100 Ω), DV voltage
External Power supply	24 V DC, 20 ㎃ max (cannot be used when using Retransmission output)
Insulation resistance	Min 20 ㏁ (500 V DC) Between 1st terminal-2nd terminal-earth terminal
Dielectric strength	2,300 V AC, 50 / 60 ㎐, for 1 min (between 1st terminal-2nd terminal-earth terminal) 1,500 V AC, 50 / 60 ㎐, for 1 min (between 2nd terminal-F.G)

Control function and output

Control type	PID auto tuning
Control action	a) temporal selection of reverse action (heating) and direct action (cooling) (due to the selection of parameter) b) heating/cooling synchronous control
Range setting	Please refer to the range and input code
Auto tuning 2 types	Target value/low target value auto tuning selection
Proportional band	0.1 ~ 999.9 % (heating/cooling type : 0.0 ~ 999.9 %)
Integral time	OFF, 1 ~ 6,000 sec
Differential time	OFF, 1 ~ 6,000 sec
A.R.W(Anti Reset Wind-up)	Auto, 50.0 ~ 200.0 % (Proportional band)
ON/OFF control	Select the output types by parameter
PID selection	Group PID selection
Proportional cycle	1 ~ 1000 sec
Manual reset	Possible to set as manual reset when integral time is OFF
Amount of output with input break	-5.0 ~ 105.0(regular type), 0.0 ~ 105.0 %(heating/cooling type)
Regular type hysteresis	0.0 ~ 100.0 % of FS. but, ON/OFF control
Heating/cooling type hysteresis	0.0 ~ 100.0 % of FS. but, ON/OFF control
Heating/cooling dead zone setting	-100.0 ~ 50.0 % (proportional band)
Fuzzy function	Function selected by parameter
Ramp function	Select the amount of output slope regarding the set temperature (setup temperature/time (min))
Retransmission output type	Present value/set value/amount of output/external Power supply (24 V DC, 20 ㎃ max) selection
Retransmission output scaling	By the limitation of set range or scaling setting
Alarm setting range	0~100% of range (absolute alarm), ±100 % (deviation alarm)
Alarm hysteresis	0.0 ~ 100.0 % of range
Alarm type	Select by the parameter selection refer to "alarm type of code"

● Output

Control output	Relay	Contact composition : 1 a Contact capacity : 240 V AC 1 A, 30 V DC 1 A (resistive load) Time resolving power : smaller one between 0.1 % and 10 ㎳
	SSR	Approx. more than 24 V DC (min 600 Ω resistive load), with disconnection, limit within approx 30 ㎃ Time resolving power : smaller one between 0.1 % and 10 ㎳
	SCR	4 – 20 ㎃ DC (resistive load less than 600 Ω) Accuracy : ±0.5 % of FS (range 4 – 20 ㎃ DC) Resolving power : approx. 3,000
Alarm output	Relay	Contact composition : 1 a. ※ 6–7 terminal Contact capacity : 240 V AC, 1 A, 30 V DC 1 A (resistive load) Output point : different depends on spec of the models (refer to the connection diagram)
Retransmission output	RET	4 – 20 ㎃ DC (resistive load less than 600 Ω), ※ 4–5 terminal Accuracy : ±0.5 % of FS (range 4 – 20 ㎃ DC) Resolving power : approx. 3,000

● Control output composition

	Output selection	Control output (OUT1)	
		Using terminal ⑥–⑦	Using terminal ④–⑤
Regular type	0	ON/OFF control output	Retransmission output (RET)
	1	Alarm output	SSR
	2	Alarm output	SCR (4 – 20 ㎃ DC)
	3	Relay control output	Retransmission output(RET)

	Output selection	Heating side (OUT1)	Cooling side (OUT2)
		Using terminal ④–⑤	Using terminal ⑥–⑦
Heating/ Cooling type	4	SSR	Relay
	5	SCR (4 – 20 ㎃ DC)	Relay

General specification

Power supply voltage	100 – 240 V AC, 50 – 60 ㎐
Voltage fluctuation	±10 % of Power supply voltage
Power consumption	10 VA max.
Ambient temperature	0 ~ 50 ℃
Ambient humidity	35 ~ 85 % RH (without dew condensation)
Storage temperature	–25 ~ 65 ℃
Vibration resistance	10 – 55 ㎐, peak amplitude 0.75 ㎜ for 2 hrs each in 3 axis direction
Shock resistance	300 ㎧, 3 times each in 3 axes direction
Weight	94 g

Range and input code

Classification	Code	Input	Range	Accuracy
Thermocouple (TC)	1	K	−200 ~ 1,370 *2	±0.5 % of FS ±1 digit
	2	K	−199.9 ~ 999.9 *2	
	3	J	−199.9 ~ 999.9 *2	
	4	E	−199.9 ~ 999.9 *2	
	5	T	−199.9 ~ 400.0 *2	
	6	R	0 ~ 1700 *2	
	7	B	0 ~ 1800 *1	
	8	S	0 ~ 1700	
	9	L	−199.9 ~ 900.0 *2	
	10	N	−200 ~ 1300	±1.0 % of FS ±1 digit
	11	U	−199.9 ~ 400.0 *2	±0.5 % of FS ±1 digit
	12	W	0 ~ 2300	
	13	PL2	0 ~ 1390	
RTD	20	KPt100 Ω	−199.9 ~ 500.0 *3	±0.5 % of FS ±1 digit
	21	Pt100 Ω	−199.9 ~ 640.0 *3	
DC voltage	30	1 − 5 V	1 − 5 V	
	32	−10 − 20 ㎷	−10 − 20 ㎷	
	33	0 − 100 ㎷	0 − 100 ㎷	
DC current	30	4 − 20 ㎃		

*1 : range 0 ~ 400 ℃ : ±10 % of FS ±1 Digit

*2 : less than 0 ℃ : ±1.0 % of FS ±1 Digit

*3 : less than −150.0 ~ 150.0 ℃ : ±1.0 % of FS ±1 Digit

※ When using 4 − 20mA DC current input, please select input code #30 and attach 250 ohm 0.1% resistance at the both terminal of input terminal

Dimension and panel cutout (unit : ㎜)

● Dimension

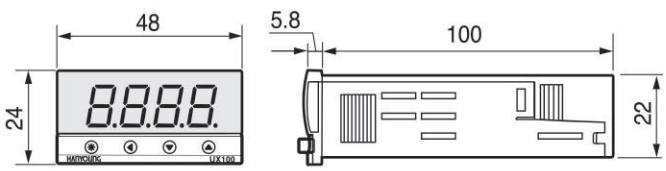

● Panel cutout

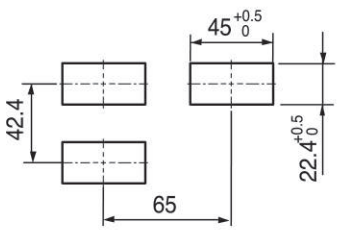

Connection diagram

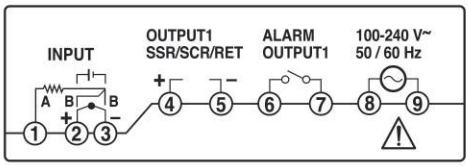

※ RS485/422 communication(cable length: 300mm)

Alarm type and code

(Cautious): Display lamp will be ON when output becomes OFF in inverted type.

Hysteresis 

(△ : Set value, −▲ : minus alarm set value, ▲ : alarm set value)

Code number	Alarm type	Operation diagram
1	high absolute (proper)	
2	low absolute (proper)	
3	high deviation (proper)	
4	low deviation (proper)	
5	high deviation (Inverted)	
6	low deviation (Inverted)	
7	high/low deviation	
8	within high/low deviation	
9	high absolute (Inverted)	
10	low absolute (Inverted)	
11	high absolute (proper, Hold function)	
12	low absolute (proper, Hold function)	
13	high deviation (proper, Hold function)	
14	low deviation (proper, Hold function)	
15	high deviation (Inverted, hold function)	
16	low deviation (Inverted, hold function)	
17	high/low deviation (hold function)	
18	within high/low deviation (Hold function)	
19	high absolute (Inverted, hold function)	
20	low absolute (Inverted, hold function)	

KX Series

Digital temperature controller

- Multi input
- Position of the decimal point selection
- 2 stage step function by the external contact (KX4S)
- Select the output action : reverse action/direct action
- PID auto tuning
- Control Loop Break Alarm (LBA)
- Absolute / deviation alarm (high, low, within range)
- Input compensation setting

Suffix code

Model		Code				Description	
KX	□-	□	□	□	□	Digital Temperature Controller	
Dimension	2N					48(W) X 96(H) ㎜	
	3N					96(W) X 48(H) ㎜	
	4N					48(W) X 48(H) ㎜	
	7N					72(W) X 72(H) ㎜	
	9N					96(W) X 96(H) ㎜	
	4S					48(W) X 48(H) ㎜	for 11 pin socket
Control output		M				Relay	
		S				SSR (voltage pulse 12 V DC)	
		C				SCR (Current 4 – 20 ㎃ DC)	
Alarm output			C			※ KX4N, KX4S selection only	ALH, ALL, LBA (1a common output)
			E			※ KX4S selection inhibited	
						KX2N, KX3N, KX9N	ALH (1c), ALL(1a)
						KX7N, KX4N (optional)	ALH (1a), ALL(1a)
			K			※ KX4N, KX4S selection inhibited	
						KX2N, KX3N, KX9N (optional)	ALH (1c), ALL(1a), LBA(1a)
						KX7N (optional)	ALH (1a), ALL(1a), LBA(1a)
Retransmission output (Optional)				A		※ Only selectable with models given in the below KX4N-□C KX2N-□E, KX3N-□E, KX9N-□E KX2N-□K, KX3N-□K, KX9N-□K	Retransmission output(RET) 4 – 20 ㎃ DC
				N		None	
Power Supply Voltage					A	100 – 240 V AC, 50 – 60 ㎐	
					D	24 V DC (KX4S selection inhibited)	

* When using 4–20 ㎃ input, attach 0.1 % of 250 Ω resistance to the input terminal of 1 – 5 V DC

Specification

Input

Thermocouple	K, J, E, T, R, B, S, L, N, U, W, PL2
RTD input	Pt 100 Ω, KPt 100 Ω
DC rated voltage	1 – 5 V DC (4 – 20 ㎃ DC), 0 – 10 V DC
Input display resolution	Usually less than the decimal points of range
Input sampling time	250 ㎳
Allowable signal source resistance	Max. 250 Ω(Thermocouple input), max. 2 ㎏Ω(DC voltage input)
Allowable wiring resistance	RTD : max 10Ω/1 wire, however resistance among 3 wires must be same
Allowable input voltage	Within ±20 V for 1 min
Scaling	0.0 % ~ 100.0 % of FS
Cold junction compensation error	±3.5 ℃ (0 ~ 50 ℃)
Input break function	With the input break, up-scale and output become OFF

Performance

Display accuracy	±0.5 % of FS but, range 0 ~ 400 of B thermocouple are excluded from the guaranteed range.
Insulation resistance	Min 20 ㎫, 500 V DC, for 1 min (between the 1st and 2nd terminal)
Dielectric strength	2,300 V AC, 50 / 60 ㎐, for 1 min (between the 1st and 2nd terminal)

Control function and output

Range setting	Please refer to the range and input code
Control type	PID control, ON/OFF control
Proportional band(P)	Within the input range
Integral time	0 ~ 3600 sec
Differential time	0 ~ 3600 sec
Anti reset wind up (A.R.W)	Within the input range
Control loop break alarm (LBA)	0 ~ 7200 sec
Proportional cycle	0 ~ 100 sec
Control output hysteresis	0 ~ 10 % of FS
ON/OFF control	Set the proportional band to "0" (0.0)
Alarm type	Absolute alarm, deviation alarm (high alarm, low alarm, within range alarm)
Indication when range exceeded	Exceeding max range “0000” flickers, exceeding min range “UUUU” flickers
Decimal point function	With DC rated voltage, select the position of decimal point which caused by parameter
Position of decimal point selection	DC voltage, select the decimal point with current input (0~3 digits)
Input compensation value setting	–100.0 ~ 100.0 of FS
High or low alarm hysteresis	0 ~ 10 % of FS
High/Low range limitation	Within the input range
Output action	Direct action/reverse action (selected by parameter)
Scaling setting	–199 ~ 9999 (high and low scaling setting when inputting DC voltage)

● Output

Control output	Relay	NO : 5 A 250 V AC, 5 A 30 V DC (resistive load) NC : 3 A 250 V AC, 1 A 30 V DC (resistive load)
	SSR	12 V DC min, pulse voltage (load resistance min 600 Ω)
	SCR	4 – 20 ㎃ DC (load resistance max 600 Ω), accuracy : ±0.2 ㎃
Alarm output	Relay	250 V AC 3 A (load resistance) ※please refer to the connection diagram (contact) just, KX4N : 1a contact, 250 V AC 1 A (load resistance)
Retransmission output	Current	4 – 20 ㎃ DC (load resistance max 600 Ω), accuracy : ±0.2 ㎃

General specification

Model	KX2N	KX3N	KX4N	KX4S	KX7N	KX9N
Power Supply Voltage	100 – 240 V AC, 50 – 60 ㎐, 24 V DC (KX4S selection inhibited)					
Voltage fluctuation	±10 % of the Power Supply Voltage					
Power consumption	11 VA max.		7 VA max.		11 VA max.	
Ambient Temperature	0 ~ 50 ℃					
Ambient humidity	35 ~ 85 % RH (without dew condensation)					
Vibration Resistance	10 – 55 ㎐, 0.76 ㎜, 2 hrs each in X, Y and Z direction					
Shock Resistance	300 m/s² to the direction 6 each 3 times					
Weight (Included the weight of box)	approx. 320 g	approx. 320 g	approx. 180 g	approx. 180 g	approx. 300 g	approx. 400 g

Range and input code

Classification	code (SL1)	Input signal	Range(℃)	
			1 ℃ (SL2 : X1XX)	0.1 ℃ (SL2 : X0XX)
Thermocouple	0001	K	–50 ~ 1300	–50.0 ~ 999.9
	0101	J *2	–50 ~ 600	–50.0 ~ 600.0
	1100	E	–199 ~ 999	–199.9 ~ 999.9
	1101	T	–50 ~ 400	–50.0 ~ 400.0
	0100	R	0 ~ 1700	0.0 ~ 999.9
	0110	B *1	0 ~ 1800	0.0 ~ 999.9
	0111	S	0 ~ 1700	0.0 ~ 999.9
	1000	L *2	–199 ~ 900	–199.9 ~ 900.0
	1001	N *2	–199 ~ 1300	–199.9 ~ 999.9
	1010	U	–50 ~ 400	–50.0 ~ 400.0
	1011	W (Re5–Re25)	0 ~ 2300	0.0 ~ 999.9
	1110	PL2	0 ~ 1300	0.0 ~ 999.9
RTD	0010	KPt100 Ω(old model)	–199 ~ 500	–199.9 ~ 500.0
	0011	Pt100 Ω(IEC)	–199 ~ 640	–199.9 ~ 640.0
DC Voltage Voltage Current	0000	1 – 5 V DC *3	–199 ~ 9999	Decimal point selection by SL4
	1111	0 – 10 V DC *3		

※ When using 4–20 ㎃ input, attach 0.1 % of 250 Ω shunt resistance at the both ends of the input terminal within 1 – 5 V DC input mode
※ Accuracy : ±0.5 % of FS
*1 : range 0 ~ 400 ℃ are excluded from the guaranteed range
*2 : range with less than 0 ℃, ±1 % of FS *3 : ±1 % of FS

Dimension and panel cutout (unit : ㎜)

KX9N

● Dimension

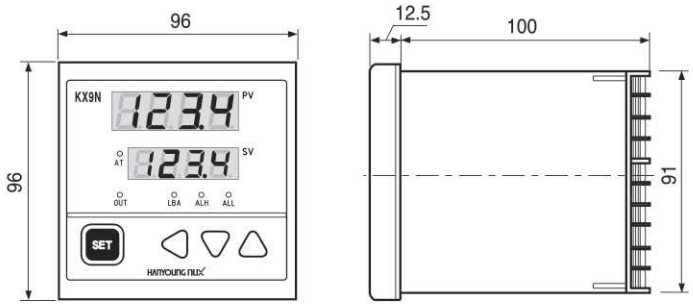

● Panel cutout

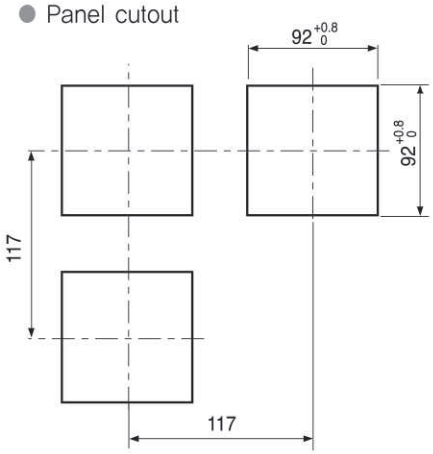

KX7N

● Dimension

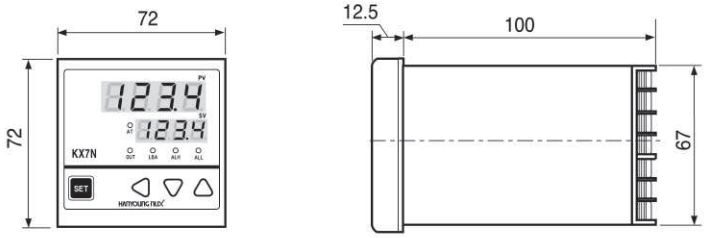

● Panel cutout

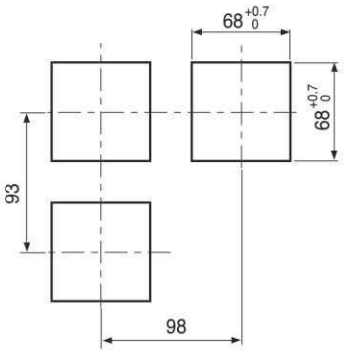

KX2N

● Dimension

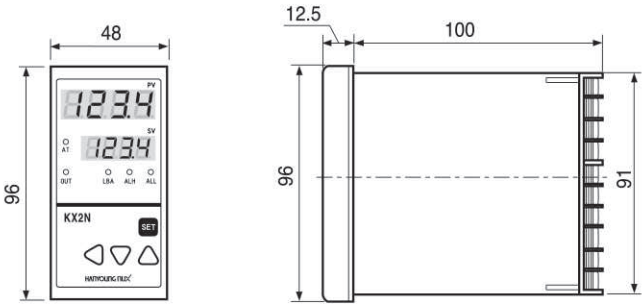

● Panel cutout

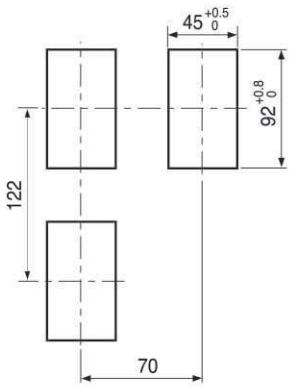

KX3N

● Dimension

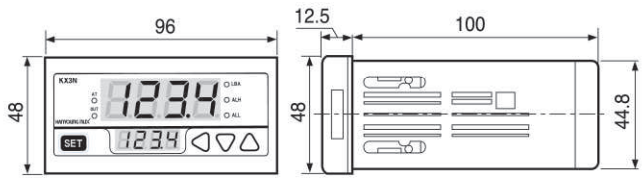

● Panel cutout

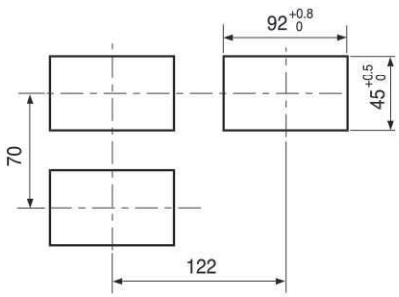

KX4N

● Dimension

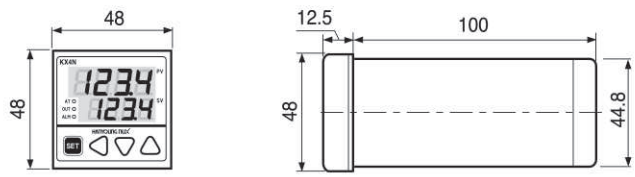

● Panel cutout

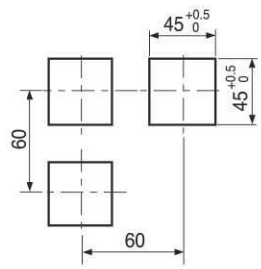

KX4S

● Dimension

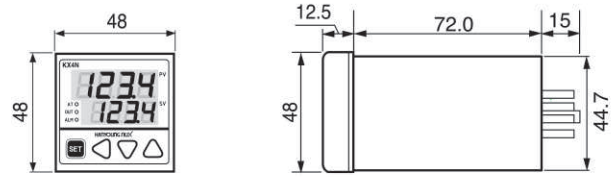

● Panel cutout

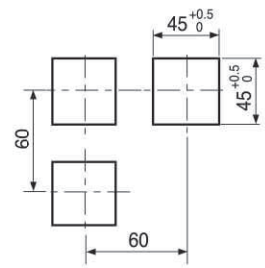

Connection diagram

● KX 2N / 3N / 9N

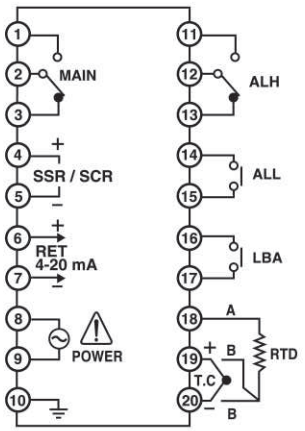

● KX 7N

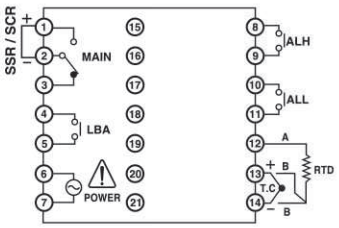

● KX 4N

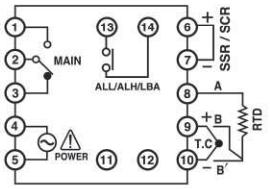

• Standard(C)

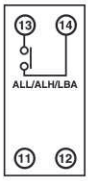

• alarm 2 contact (E)

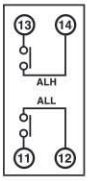

• Standard(C) + Retransmission output(A)

● KX 4S

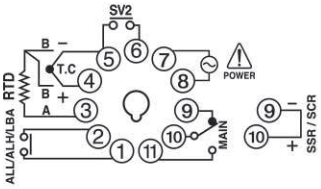

Main function explanation

■ Auto tuning (AT)function

Auto tuning function measures, computes and sets the optimum PID or ARW constant to the temperature control automatically.
After supplying power in and while temperature is increasing, press the SET key and △ key synchronously to begin the auto tuning.
When auto tuning is finished, tuning operation will be ended automatically.

■ LBA : Control Loop Break Alarm

LBA function starts to measure time from the moment when the PID computed value becomes 0 % or 100 %. Also, from this point, this function detects heater break, sensor break manipulator malfunction and etc by comparing the changed amount of measured value in each set time. Also, it can set the LBA dead band in order to prevent any malfunction to happen in the normal control loop.

① When control output value which obtained by PID operation is 100 %, LBA will be ON only when process value does not rise more than 2 ℃ in the LBA setting time

② When control output value which obtained by PID operation is 0 %, LBA will be ON only when process value does not drop more than 2 ℃ in the LBA setting time

■ Heating/Cooling output action selection

Able to select reverse action (heating control) or direct action (cooling control) output by the internal parameter

① Reverse action: ON with measurement value 〈 Setting value ② Direct action: ON with measurement 〉 Setting value

■ ON/OFF control setting method

Usually temperature controller performs the temperature control by "PID control method" which is by the PID auto-tuning. However, ON/OFF control method is used when controlling refrigerator, fan, solenoid valve and etc. When users want to set the temperature controller as ON/OFF control mode, set the set value of proportional band as 0 in the "general setting parameter". Here, HYS (hysteresis) parameter will be displayed. Prevent such actions by setting the desired ON/OFF action range.

Parameter symbol	Name	Set range	Default value
P	Proportional band	0 ~ 100 %	20 ℃
	Set the proportional band as "0" when using ON/OFF control. However, performing PID auto-tuning when using the ON/OFF control, it will be changed to PID control		

■ 2 stage step function by external contact (Only with model KX4S)

It can select 2 types of control target value that has been set in advance by external contact input ON/OFF so it can be applied to the step control and etc easily. (SV1 selection = #5 – #6 OFF)

■ Max range and min range exceeded indication

① If the present value increases due to the input break (sensor break) or etc and exceeds the maximum temperature range then OOOO (indication of exceeding the max range) will flicker in the measured value displaying unit.

② If present value decreases and exceeds the minimum temperature range then UUUU (indication of exceeding the min range) will flicker in the measured value displaying unit.

Parameter composition

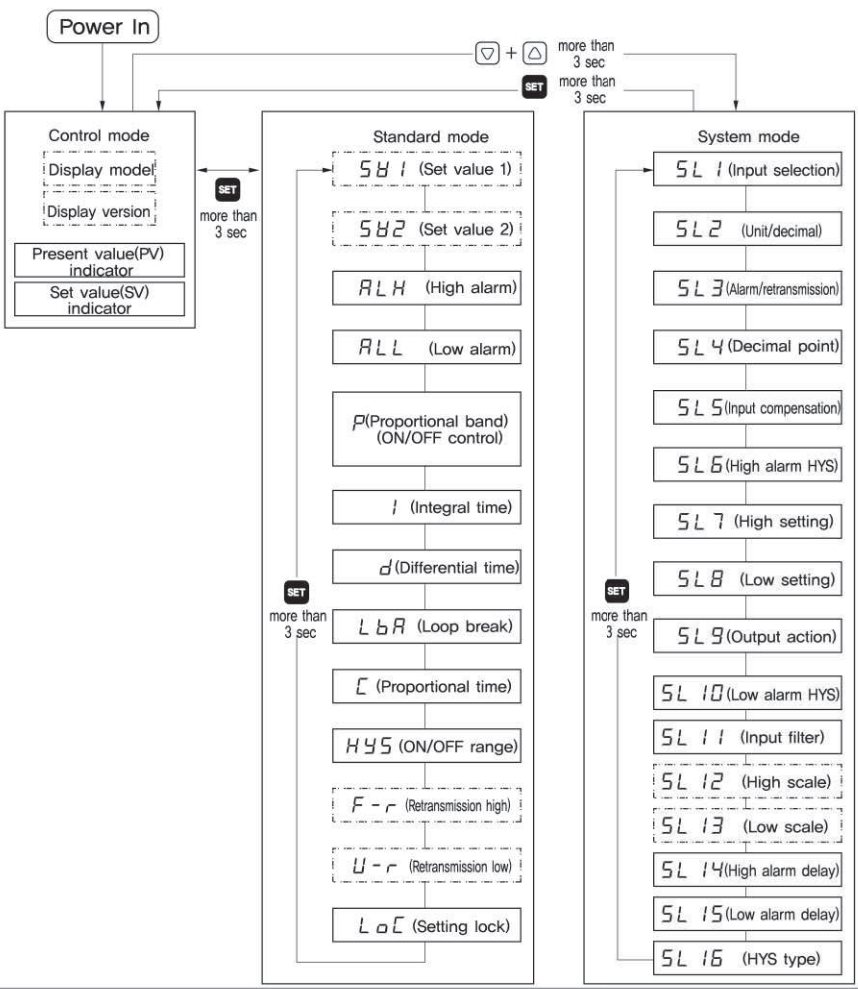

Parameter setting

■ Control temperature setting

Supplying the power in after completes the wiring, it will display the model and version of temperature controller for a while and display measured temperature and set temperature.
This state is called as control mode.
Pressing the SET key in the control mode state will flicker the set value in the indicator.

■ General mode setting

General mode is the setting mode which sets alarm set value, ON/OFF action, hysteresis (HYS) and etc which are required to change the set value frequently. It sets each parameter when necessary.

But, performing the PID auto-tuning will automatically set P(proportional band), I (integral time), d(differential time), A (anti reset wind up), LbA (control loop break alarm) and etc

*(Press the MODE key for 3 seconds continuously.)

Present value display unit		Name	Default value	Setting range	Explanation
*1	SV1	Set value 1	-50 ℃	within input range	Set value 1 (SV 1)
*1	SV2	Set value2	-50 ℃		Set value 2 (SV 2)
	ALH	High alarm	1,300 ℃		display the set value of high alarm.
	ALL	Low alarm	-50 ℃		display the set value of low alarm.
	P	Proportional band	20 ℃	0~100% of FS	set when performing the proportional control. Setting to 「0」 will be as ON/OFF control.
	A	Anti reset wind up	20 ℃	0~100% of FS	prevents overshoot and undershoot caused by integral effectiveness. Automatically operates with setting 「0」.
	I	Integral time	240sec	0~3600sec	Eliminates offset occurring in proportional control. and reach faster Integral action will be turned OFF with setting 「0」.
	d	Differential time	60sec	0~3600sec	prevents ripples by predicting output change thereby improving control stability. Differential action will be turned OFF with setting 「0」.
	LbA	Control loop break alarm	0sec	0~7200sec	Indicates control loop break alarm setting. Not operated with [0]setting
	C	Proportional cycle	*3	1~100sec	Displays control output cycle (sec).
	HYS	Hysteresis	1 ℃	0~10 % of FS	set the control sensitivity of control output (main output)(with ON/OFF)
*2	F-r	High Retransmission output	1,300 ℃	within input range	limits the max value of Retransmission output
*2	U-r	Low Retransmission output	-50 ℃		limits the min value of Retransmission output.
	LoC	Set data lock	0000	0000~0003	Set the set data lock level

(Press the SET key.)

* 1 is exclusive for KX4S specification (Not displayed with other specifications)

* 2 is optional (If the model does not have retransmission output then not displayed)

* 3 varies the default value depending on the control input
(20 sec with relay output, SSR output : 2 sec)

System mode setting

The system mode sets the specification of temperature controller in the first installation by engineer

In the control mode press △ and ▽ keys at the same time for 3 seconds to enter in to the initial setting mode

Press the SET key or 3 seconds to return to the operation mode (PV/SV)

(Press the SET key.)

Symbol (PV display screen)	List	Description	Default value (SV display screen)
SL1	Input selection	Multi input, "Please refer to the range and input code"	0001 (K Thermocouple)
SL2 □□□□ ①②③④	① Output selection	0 : Current output 1 : Relay, voltage output	1111
	② Decimal point function selection	0 : Without decimal point 1 : With decimal point	
	③ Temperature unit selection	0 : None 1 : Celsius(℃)	
	④ Indicator/controller selection	0 : Temperature indicator 1 : Temperature controller	
SL3 □□□□ ①②③④	① Alarm standby action selection	0 : With standby operation 1 : NONE	1111
	② Retransmission output (optional):	0 : With the Retransmission output 1 : NONE	
	③ Alarm type selection	0 : Alarm within the range 1 : High and low alarm	
	④ Deviation/ absolute alarm selection	0 : Deviation alarm 1 : Absolute alarm	
SL4	Position of decimal point selection	0 → 0000 (none) 1 → 000.0 (1st) 2 → 00.00 (2nd digit) 3 → 0.000 (3rd digit)	0
SL5	Input compensation value setting	±100 % of FS	0
SL6	High alarm(ALH) hysteresis setting	± 10% of max range	1
SL7	Max temperature setting	Within temperature setting but, SL7 〉 SL8	1300
SL8	min temperature setting		-50
SL9	Control output action	0 : Reverse action (heating) 1 : Direct action (cooling)	0
SL10	Low alarm hysteresis setting	±10 % of max range	1 ℃
SL11	Input filter	0 ~ 100 sec	0
SL12	Max input scale setting	9999	9999
SL13	Min input scale setting	-1999	-1999
SL14	High alarm (ALH) delay time setting	0 ~ 100sec	0 sec
SL15	Low alarm (ALL) delay time setting	0 ~ 100sec	0 sec
SL16	Control output hysteresis type selection	0: Hysteresis 1 : Hysteresis X double action (left, right)	0

DX Series

Simple operation, approved function

- PID auto tuning
- Select direct action / reverse action internally
- High and low alarm output
- Control loop break alarm
- Decimal point display and high / low setting limitation
- Retransmission output

Suffix code

Model		Code						Description
DX	□-	□	□	□	□	□	□	Digital temperature controller
Dimension	2							48(W) x 96(H) ㎜
	3							96(W) x 48(H) ㎜
	4							48(W) x 48(H) ㎜
	7							72(W) x 72(H) ㎜
	9							96(W) x 96(H) ㎜
Input		K						K thermocouple
		J						J thermocouple
		R						R thermocouple
		D						RTD (KPt 100 Ω)
		P						RTD (Pt 100 Ω)
		V						1 – 5 V DC
		C						4 – 20 ㎃ DC
		F						0 – 10 V DC
Control output			M					Relay contact output
			C					Current output (4 – 20 ㎃ DC)
			S					SSR (voltage pulse output, 12 V DC)
Alarm output				S				Alarm output 1 contact (model : DX4)
				W				Alarm output 2 contact (all models except DX4)
Optional					A			Retransmission output (4 – 20 ㎃ DC. measured value)
					N			None (DX4, DX7 No retransmission output)
Control operation ※ selection by SL9 (initial value : R)						R		Reverse action (heating control)
						D		Direct action (cooling control)
Power Supply Voltage							•	No indication (100 – 240 V AC)
							C	24 V DC / AC

Specification

Input

Thermocouple	K, J, R
RTD input	KPt 100 Ω, Pt 100 Ω
DC rated voltage	1 – 5 V DC, 0 – 10 V DC, 4 – 20 ㎃ DC
Input sampling time	250 ㎳
Input display resolution	Less than 1 C in standard (less than 0.1 C in decimal point range)
Input impedance	Thermocouple and DC rated voltage: min 1MΩ, DC voltage input: approx 1 MΩ
Allowable signal source resistance	Thermocouple–(max 250 Ω), DC voltage (max 2 ㎏)
Allowable wiring resistance	RTD max 10Ω (however resistance among 3 wires should be same)
Allowable input voltage	±20 V DC for 1 min
Input compensation	±100 % of FS.
Input scaling	–1999 ~ 9999 (within range of SL12 ~ SL13, but only with voltage and current input)
Cold junction compensation error	±3.5 ℃ (between 0 ~ 50 ℃)
Input signal break detection	UP Scale

Performance

Display accuracy	±0.5 % of FS but, ±1 % of FS with rated voltage
Retransmission output accuracy	±0.2 ㎃ DC (resistive load max 600 Ω, output range 3.2 – 20.8 ㎃ DC)
Insulation resistance	Min 20 ㏁ (500 V DC), input terminal–Power terminal, power terminal–Protection earth terminal(exterior case)
Dielectric strength	2,300 V AC. 50 / 60 ㎐, for 1 min (input terminal–Power terminal, power terminal–protection earth terminal)

Control function and output

Control type	PID auto tuning
Control action	Reverse action (heating), direct action (cooling), By the internal setting (SL9)
Range setting	Same as input range chart
Proportional band	0 ~ 100 % of FS.
Integral time	0 ~ 3,600 sec
Differential time	0 ~ 3,600 sec
A.R.W(Anti Reset Wind-up)	Auto(A=0), 0 ~ 100 % of FS.
ON/OFF control	Perform the ON/OFF control if proportional band is set as 0
Hysteresis when performing ON/OFF control	0 ~ 10 % of FS.
Control loop break alarm	1 ~ 7,200 sec (Generally set twice as the integral time)
Proportional cycle	1 ~ 100 sec
Position of decimal points selection	1 ~ 4 (000.0 with setting 2)

Retransmission output	4 – 20 ㎃ DC (measured value)
Alarm type	high alarm(ALH), low alarm(ALL), high and low alarm within the range (deviation setting, absolute setting)
Alarm setting range	0 ~ 100 % of FS.
High alarm hysteresis(ALH) setting	0 ~ 10 % of FS.

● Output

Control output	Relay output	contact capacity : 1c, 250 V AC, 5 A (resistive load)
	SSR	approx. 12 V d,c (resistive load min 600 Ω)
	Current	4 – 20 ㎃ DC (resistive load max 600 Ω). accuracy : ±0.2 ㎃
Alarm output	Temperature alarm (relay)	DX4 alarm output : high, low alarm, LBA common, 1 a X 1 contact High alarm (ALH) : 1 C X 1 contact (but DX7 is 1 a X 1 contact)
	LBA (relay)	Low alarm (ALL) : 1 a X 1 contact 250 V AC. 5A (Resistive load)
Retransmission output	Current	4 – 20 ㎃ DC (Resistive load max 600 Ω), accuracy : ±0.2 ㎃.

Standard specification

Power Supply Voltage	100 – 240 V AC, 50 – 60 Hz, 24 V DC/AC, 50 – 60 Hz (selectable by the suffix code)
Voltage fluctuation	±10 % of Power Supply Voltage
Power consumption	12 VA (100 – 240 V AC, 24 V AC), 4.5 W (24 V DC)
Ambient temperature	0 ~ 50 ℃
Ambient humidity	35 ~ 85 % RH (without dew condensation)
Storage temperature	–25 ~ 65 ℃
Vibration	10 – 55 ㎐, 0.76 ㎜, X, Y, Z 2 hrs each in 3 axis direction
Shock	300 ㎧ to the direction 6 for 3 times each
Weight	DX9 : approx. 472 g, DX7 : approx. 344 g, DX4 : approx. 342 g, DX3 : approx. 340 g, DX2 : approx. 342 g

Range and input code

(Select by suffix code. Do not change SL1 parameter)

Classification	SL1	Input		Range (℃)		Accuracy
Thermocouple	0001	K	K	–50 ~ 1,300	–50.0 ~ 999.9	± 0.5 % of FS
	0101	J	J	–50 ~ 600	–50.0 ~ 600.0	
	0100	R	R	0 ~ 1700	0.0 ~ 999.9	
RTD	0010	D	Kpt100 Ω	–199 ~ 500	–199.0 ~ 500.0	
	0011	P	Pt100 Ω	–199 ~ 640	–199.0 ~ 640.0	
Voltage/current	0000	V	1 – 5 V DC	–1999 ~ 9999	decimal points is due to the SL4	1 % of FS
	0000	C	4 – 20 ㎃ DC	–1999 ~ 9999		
	1111	F	0 – 10 V DC	–1999 ~ 9999		

Dimension and panel cutout (Unit : ㎜)

DX9

● Dimension

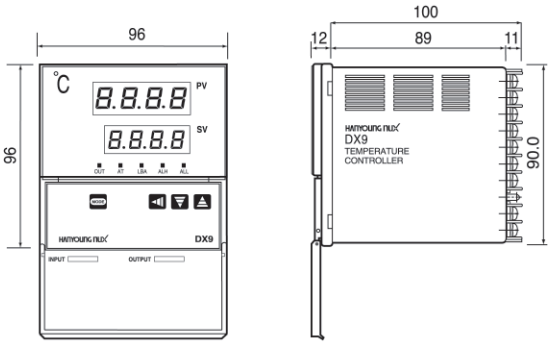

● Panel cutout

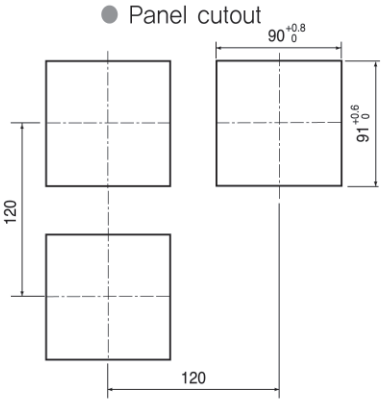

DX2

● Dimension

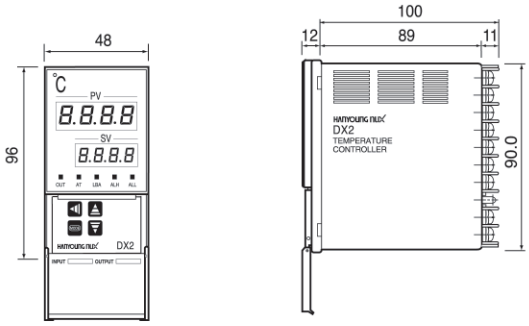

● Panel cutout

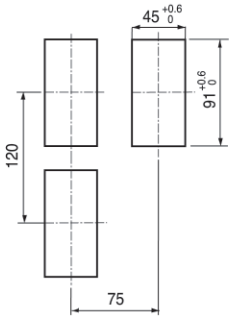

DX7

● Dimension

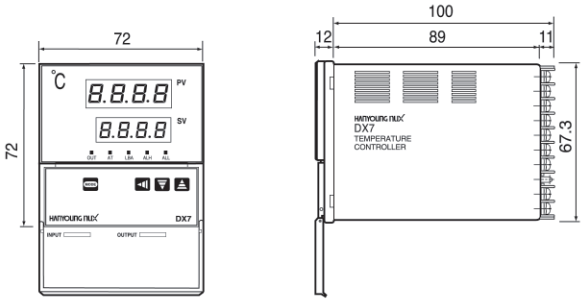

● Panel cutout

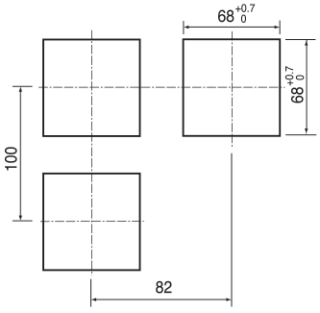

DX3

● Dimension

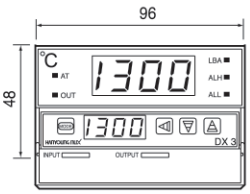

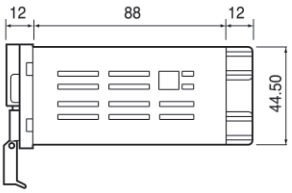

● Panel cutout

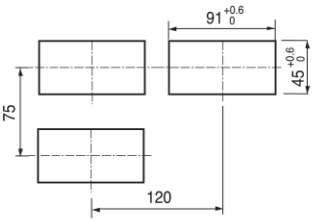

DX4

● Dimension (Unit : ㎜)

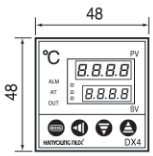

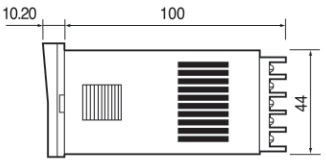

● Panel cutout (Unit : ㎜)

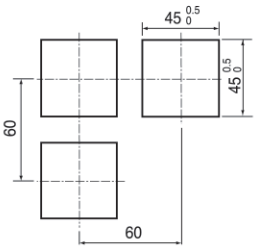

Connection diagram

● DX 9

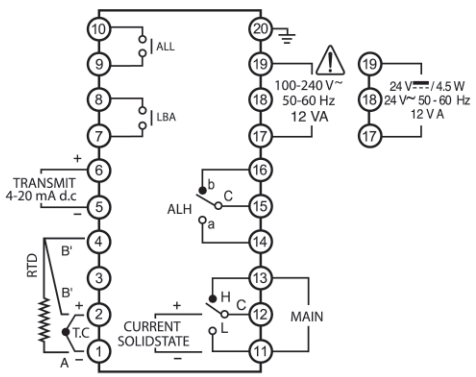

● DX 2

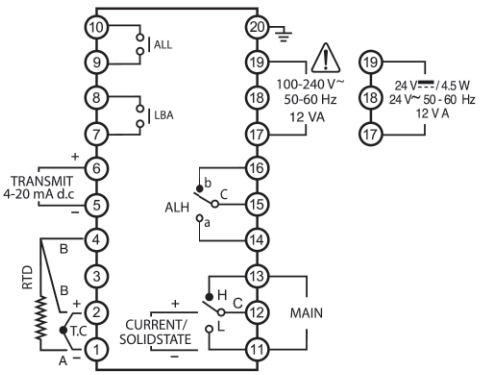

● DX 7

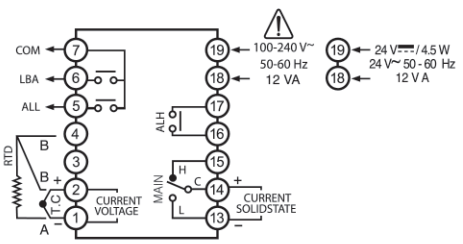

● DX 3

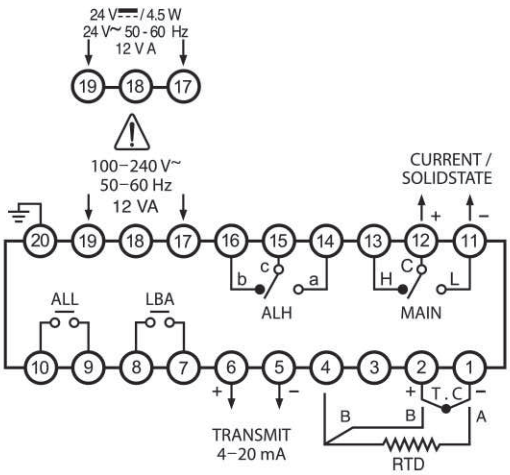

● DX 4

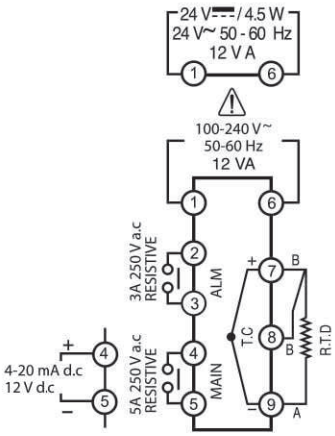

Parameter composition and setting

When you finished the wiring, please check for any mistakes. If everything is wired correctly, turn on the power. After a short period of time, PV and SV will be displayed in the display unit. Generally, set the target temperature in the temperature setting mode by using the buttons in the front panel of instrument and perform auto tuning then all the setting will be completed. But this instrument contains 3 types of setting modes besides the temperature setting mode such as normal setting mode, system setting mode and etc. These extra setting modes can cope with various kinds of control conditions. Please use them correctly as necessary.

■ Model display when power is ON

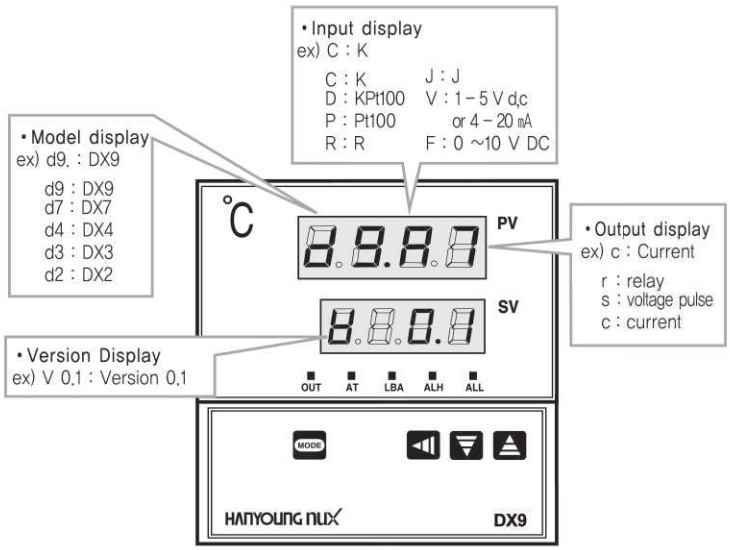

■ Max range and min range exceeded indication

① When PV increases due to the break or short of input and if it exceeds the max temperature range because of the PV increment, then the indication 0000 will flicker in the PV display unit which indicates that the value has exceeded the max range
② If PV decreases and exceeds the min temperature range then the indication UUUU will flicker in the PV display unit which indicates that the value has exceeded the min temperature range

■ Auto tuning function

The auto tuning function automatically measures, computes and set the optimum PID and ARW constants. The Auto tuning function is activated any time from any process states after power on while temperature is rising or when control is stabilized.

(1) Perform auto tuning after finishing setting up functions other than PID and ARW
(2) Press the MODE key and ▲ key synchronously then lamp of AT indication will flicker and auto tuning will begin.
(3) When auto tuning finishes performing then AT indication lamp will stop flickering automatically. Press MODE key in consecutive order in order to check for constant by auto tuning.
(4) When changing the constants which were set by the auto tuning automatically, please follow the setting instruction of each parameters and change them.
(5) When users want auto tuning function to be suspended, press the MODE key and ▲ key synchronously then AT indication lamp will stop flickering and auto tuning will stop operating. In this case, PID and ARW each constant will not be changed
(maintain the constant before auto tuning starts).
(6) When users want to change the SV (set value) during auto turning is performing, first of all, please suspend the auto tuning function and perform the PID control by using the values before auto tuning starts.

■ Set data lock function

The set data lock function is used to prevent the changing of each set value by the front panel key and the activation of the auto tuning function. Please use it for preventing any malfunction after setting is completed. Set data lock display LOC by using MODE key, and then set the following value in accordance with parameter setting procedure thereby enabling data lock ON or OFF.
0000 : deactivate the set data lock function.
0001 : only able to change the set data lock indicated set value.
All of other data and AT function will be locked with other settings.

■ Control loop break alarm (LBA function)

(1) Setting procedure

Please set the set value of the LBA to a value of twice as the integral time. The LBA also can be set by the auto tuning function. In this case, the set value will be set to a value of twice the integral time automatically.

(2) Description of operation

LBA function starts to measure the time from the moment that the PID Computed Value (Output ON time/cycle) becomes 0% or 100%, and detects the changed amount of process value at each LBA setting time, and determines ON and OFF of control loop break alarm by the corresponding amount of changed value.

① When the status at a 100% PID computed value continues beyond the LBA setting time, the control LBA will be turned ON if the measured value (PV) does not rise by 2 C or more. (With forward operation, ON if it does not fall by 2 C or more)
② When the status at 0% PID computed value continues beyond the LBA setting time, the control LBA will be turned ON if the measured value (PV) does not fall by 2 C or more. (With forward operation, ON if it does not rise by 2 C or more)

(3) Causes of operation

The LBA is operated under the following conditions.

① controlled object trouble: Heater break, no power supply, incorrect wiring and etc.
② sensor trouble: disconnection or short of sensor.
③ actuator trouble: burnt relay welding, incorrect wiring, does not get turned ON.
④ output circuit trouble: relay welding inside of the instrument cannot ON or OFF.
⑤ input circuit trouble: the measured value does not get changed even if input value changes and etc.

* I If causes of the above trouble cannot be identified then please check the control system.

■ ON/OFF control setting method

Usually temperature controller performs the temperature control by "PID control method" which is by the PID auto-tuning. However, ON/OFF control method is used when controlling refrigerator, fan, solenoid valve and etc. When users want to set the temperature controller as ON/OFF control mode, set the set value of proportional band as 0 in the "general setting parameter". Here, HYS (hysteresis) parameter will be displayed. Prevent such actions by setting the desired ON/OFF action range.

Parameter symbol	Name	Set range	Default value
P	Proportional band	0 ~ 100 %	20 ℃
	Set the proportional band as "0" when using ON/OFF control. However, performing PID auto-tuning when using the ON/OFF control, it will be changed to PID control		

■ Alarm function

※ Alarm operation can be set as following diagram (▲: set value (SV) △: alarm set value)

Deviation alarm setting	High and low alarm	
	Alarm within range	

This is the setting method that activates the alarm once the temperature goes over or under the set value. For example, if users want to activate the alarm high (ALH) at 205℃ and alarm low (ALL) at 190℃ when the set temperature is 200℃, set 5 c at the alarm high (ALH) and 10℃ at the alarm low (ALL). Also, if users change the set temperature to the 300℃, alarm high (ALH) will be activated at 305℃ and alarm low (ALL) will be activated at 290℃.

Absolute alarm setting	High and low alarm	
	Alarm within range	

Activate the high and low alarm at the set temperature disregarding the main set value.

※ With the alarm within the range, alarm low (ALL) relay does not get activated and only alarm high (ALH) relay is activated.

■ Anti reset wind-up (ARW)

Set the over integral preventing function at the "A" parameter

① control with A=Auto (0)

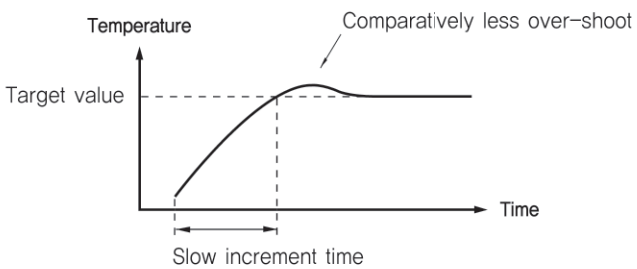

② in case when temperature is set in A

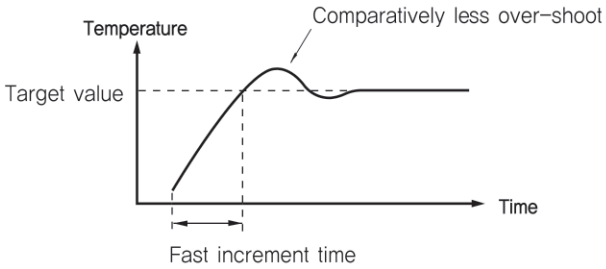

※ If A value is too small, large over shoot or under shoot may occur
Please use it by setting the value same as P (proportional band)

Parameter composition

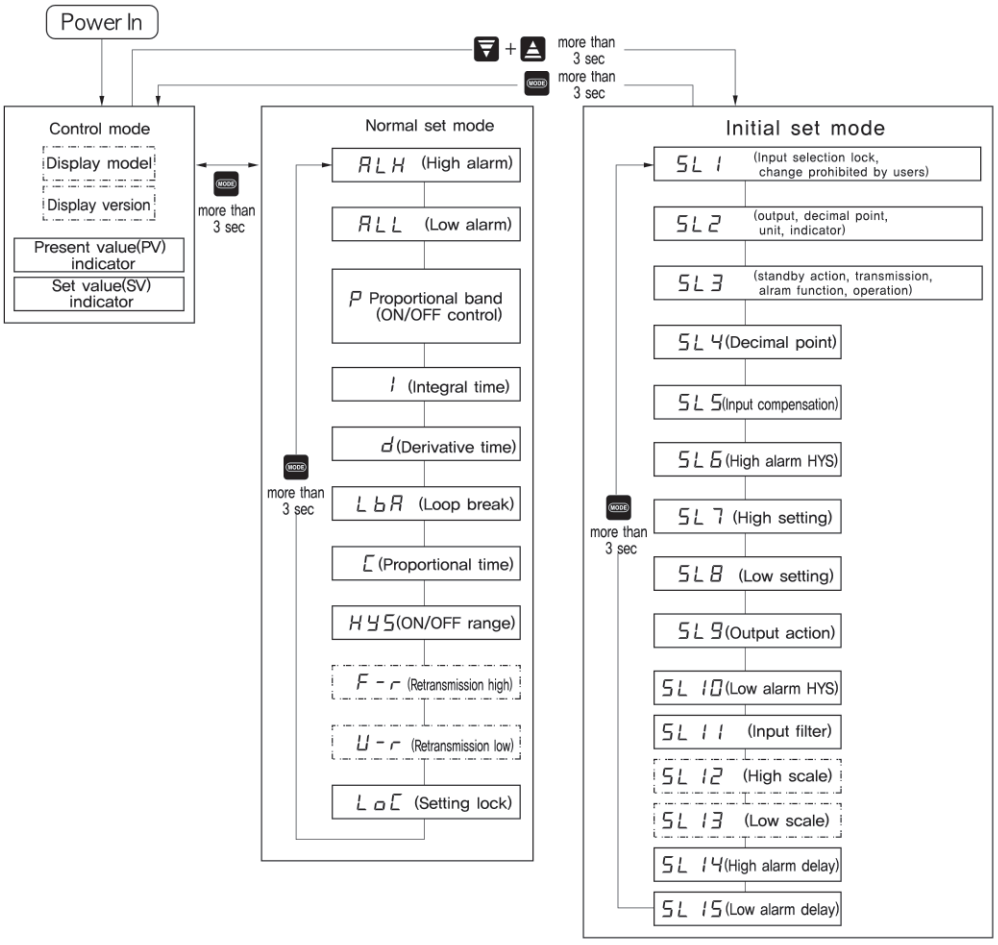

Parameter setting

■ Control temperature setting

Supplying the power in after completes the wiring, it will display the model and version of temperature controller for a while and display measured temperature and set temperature. This state is called as control mode.
Pressing the MODE key in the control mode state will flicker the set value in the indicator.

■ General mode setting

General mode is the setting mode which sets alarm set value, ON/OFF action, hysteresis (HYS) and etc which are required to change the set value frequently. It is set each parameter on occasion demands.

> But, performing the PID auto-tuning will automatically set P (proportional band), I (integral time), d (derivative time), A (anti reset wind up), LbA (control loop break alarm) and etc

■ Normal setting mode

*(Press the MODE key for 3 seconds continuously.)

Present value display unit		Name	Setting range	Explanation
*1	ALH	High alarm (ALH)	within the input range	display the set value of high alarm.
*1	ALL	Low alarm (ALL)	within the input range	display the set value of low alarm.
	P	Proportional band (P)	0~100% FS	set when performing the proportional control. Setting to 「0」 will become ON/OFF control.
	A	Anti reset wind up (ARW)	0~100% FS	prevents overshoot and undershoot caused by integral effectiveness. Automatically operates with setting 「0」.
	I	Integral time (I)	0~3600 S	Eliminates offset occurring in proportional control, and read the target value faster Integral action will be turned OFF with setting 「0」.
	d	Derivative time (D)	0~3600 S	prevents ripples by predicting output change thereby improving control stability. Derivative action will be turned OFF with setting 「0」.
	LbA	Control loop break alarm (LBA)	0~7200 S	Indicates control loop break alarm setting. Cancel the control loop break alarm with [0] setting
	C	Proportional cycle (C)	0~100 S	Displays control output cycle (sec).
	HYS	Hysteresis (HYS)	0~10% FS	set the control sensitivity of control output (with ON/off control)
*2	F-r	High Retransmission output	within the input range	limits the max value of Retransmission output
*3	U-r	Low Retransmission output	within the input range	limits the min value of Retransmission output.
	LoC	Set data lock (LOC)	0~3	0000:Lock cancellation, 0001:Possible to change only SV

(Press the MODE key.)

* 2 and 3 is optional (not displayed when there is no retransmission output)
(DX4 and DX7 are not included in the retransmission output optional)
* 1, changing ALH, ALL to SL3 become reset

■ Initial set mode

The system mode sets the temperature controller's specification when it is set first by engineer pressing key and key synchronously in the control mode for 3 sec will enter in to the system mode.

Return to the setting mode(PV/SV) by pressing MODE key to 3 sec

(Press the MODE key.)

Symbol (PV display screen)	List	Description	Reference
SL1	Input selection	By the suffix code (fix, change inhibit) "Refer to the range and input code"	
SL2 ① ② ③ ④	① Output selection	0 : current output 1 : relay, voltage output	
	② Decimal points function selection	0 : Decimal point display 1 : No decimal point	
	③ Temperature unit selection	0 : None 1 : Celsius(℃)	
	④ Indicator/ controller selection	0 : Temperature indicator 1 : Temperature controller	
SL3 ① ② ③ ④	① Alarm standby operation selection	0 : Yes 1 : No	
	② Retransmission output (Optional)	0 : Yes 1 : No	
	③ Alarm type selection	0 : Alarm within range 1 : high and low alarm	
	④ Deviation/ absolute alarm selection	0 : deviation alarm 1 : absolute alarm	
SL4	Position of decimal point selection	000.0 is indicated when it is set as 2	When users want to display the decimal points on the first digit, set as 0002
SL5	Input compensation setting	±100 % of FS	
SL6	Alarm high (ALH) Hysteresis setting	0 ~ 10 % of FS	
SL7	Max temperature setting	Within Temperature setting but, SL7 〉 SL8	Refer to the range and input code
SL8	Min temperature setting		Refer to the range and input code
SL9	Output operation (control direction)	0 : reverse operation (heating operation) 1 : direct operation (cooling operation)	0 : reverse operation 1 : direct operation
SL10	Alarm Low (ALH) Hysteresis setting	0 ~ 10 % of FS	
SL11	Input filter	0 ~ 100 sec	
SL12	Max input scale setting	9999	Applied with voltage input
SL13	Min input scale setting	-1999	Applied with voltage input
SL14	Alarm High (ALH) delay time setting	0 ~ 100sec	
SL15	Alarm Low (ALL) delay time setting	0 ~ 100sec	

MC9

Multi channels digital temperature controller

- 4 channel / 8 channel control function
- Multi memory function (max 8 X 8)
- Heating / cooling control (4 channels)
- Contact input
- Communication function (RS485/422)

Suffix code (4 channel)

Model	Code						Description	
MC9-4	□	□	□	□	□	□	4 channels digital temperature controller dimension : 96(W) X 96(H) ㎜	
Control type	D						Universal type	Direct action (cooling action)
	R							Reverse action (heating action)
	W						Heating/Cooling control	Heating/Cooling (synchronous output)
Input type		□					Refer to the input type code	
Heating output (output 1~4)			M				Relay contact output	
			S				SSR operation output	
			T				Triac operation output	
			4				4 – 20 ㎃ DC (Current output)	
			5				0 – 20 ㎃ DC (Current output)	
Cooling output (output 5~8) (Only for MC9-4W mode)				N			NONE (Only control type D&R)	
				M			Relay contact output	
				S			SSR operation output	
				T			Triac operation output	
				4			4 – 20 ㎃ DC (Current output)	
				5			0 – 20 ㎃ DC (Current output)	
Optional					N		NONE	
					1		AL2, AL3	
					2		AL2, AL3 + RS232 + contact input	
					3		AL2, AL3 + RS485 / 422 + contact input	
					4		AL2, AL3 + heater break	
Power supply voltage						2	100 – 240 V AC 50 / 60 ㎐	

Suffix code (8 channel)

Model	Code						Description
MC9-8	□	□	□	□	□	□	8 channel digital temperature controller. Dimension : 96(W) X 96(H) X 100(D)
Control type	D						Direct action (cooling action)
	R						Reverse action (heating action)
Input type		□					Refer to "code" of the range and input code chart
Output 1 ~ 4			M				Relay contact output
			S				SSR operation output
			T				Triac operation output
			4				4 – 20 ㎃ DC (Current output)
			5				0 – 20 ㎃ DC (Current output)
Output 5 ~ 8				N			NONE (when selected, input channels 5 ~ 8 are for indication)
				M			Relay contact output
				S			SSR operation output
				T			Triac operation output
				4			4 – 20 ㎃ DC (Current output)
				5			0 – 20 ㎃ DC (Current output)
Optional					N		None
					2		RS232 + contact input
					3		RS485 / 422 + contact input
					4		Heater break
Power supply voltage						2	100 – 240 V AC 50/60 ㎐

Specification

Input

Thermocouple	K, J, R, S, B, E, N, T, W, PL2, U, L
RTD	Pt100 Ω, KPt100 Ω
DC voltage	0 – 5 V, 1 – 5 V, 0 – 10 V, 4 – 20 ㎃ (attach 250 Ω external resistance)
Sampling time	1 sec.
Input display resolution	Usually less than decimal points of the range
Input impedance	Min 1 ㏁ (thermocouple, DC voltage input)
Effect of Allowable input resistance	Approx. 0.2 ㎶/Ω
Allowable input leading wire resistance	RTD (max 10, but resistance among 3 wires should be same)
Allowable input voltage	-2 – 5 V (thermocouple, RTD), -5 – 12 V (DC voltage)
Scaling	0.0 % ~ 100.0 % of FS
Input compensation	±100 % of FS
Cold junction compensation error	±1.5 ℃ (between 0 ~ 50 ℃)
Input signal break detection	UP SCALE(reverse action), DOWN SCALE(forward action)

Performance

Display accuracy	Thermocouple	Bigger one between the (±0.3 % of FS ±1 Digit) or ±2 ℃
	RTD	Bigger one between the (±0.3 % of FS ±1 Digit) or ±0.8 ℃
	DC voltage	Bigger one between the ±0.3 % of FS ±1 Digit
Insulation resistance	Min 20 MΩ (500 V DC), measurement terminal – power terminal,	
Dielectric strength	2,300 V AC, 50 / 60 Hz, for 1 min measurement terminal – power terminal	

Control function and output

Control type	PID auto tuning
Setting all channels synchronously	Set the same value of 4 channel and 8 channel at the same time
Control operation	a) reverse action (heating)/forward action (cooling). by the "Suffix code". B) heating/cooling synchronous control (only with 4 channel)
Range setting	Same as range and input code
Contact input(DI)	Selection of RUN/STOP by contact input or control zone
Auto tuning	Auto tuning by parameter selection
Proportional band	0 (0.0) ~ max value of range
Integral time	1 ~ 3,600 sec
Differential time	1 ~ 3,600 sec
Anti Reset Wind-up	Auto, 0 ~ 100 % (Proportional band)
Slope setting	0(0.0) ~ max value of range/1min (set the slope regarding the target value)
Scan function	Display the measured value and set value depending on the channel in order
ON/OFF function	Set proportional band to "0"
Multi memory zone	Select among 8 zones within each channel
H.B.A(Heater Break Alarm)	0.0 – 100.0 A (possible to use with ON/OFF control and time proportional control output)
H.B.A dead zone setting	0 ~ 100 sec
LBA (Loop Break Alarm)	0.1 ~ 200.0 minute (Dead zone : 0 ~ 100 sec)
Alarm output	Max 3 contacts, parallel operation regarding all channels (Optional)
Alarm type	Selection by the parameters

● Output

Control output	Relay	Contact capacity : 1 a, 250 V AC, 3 A (Load resistance) Proportional cycle : 1 ~ 1,000 sec Time resolving power : smaller one between 0.1 % and 10 ㎳
	SSR	Voltage pulse : approx. more than 12 V DC (Load resistance min 600 Ω) Proportional cycle : 1 ~ 1,000 sec Time resolving power : smaller one between 0.1 % and 10 ㎳
	SCR	Current : 4 – 20 ㎃ DC, 0 – 20 ㎃ (Load resistance max 600 Ω) Accuracy : ±1.0 % of FS (4 – 20 ㎃ range)
	Triac	200 V AC. 0.5 A (ambient temperature less than 40C), has Zero crossing function
Alarm output (relay)	Temperature alarm (AL1,2,3)	1 a, 250 V AC, 1 A, 30 V DC 1 A (Load resistance) output point : max 3 contacts (Varies depends on optional spec)
	HBA (Heater Break Alarm)	1 a 1 contact, 250 V AC, 1 A, 30 V DC 1 A (load resistance) Measurement current : 1 – 100 A AC (Resolving power : 0.5 A, ± 5 % of FS ± 1 Digit) Heater break detection C.T : model JS81L (J&D Electronic.Co.Ltd) Accuracy : bigger one between the ±5 % of FS and ±2 A
	LBA (Loop Break Alarm)	1 a 1 contact, 250 V AC, 1 A, 30 V DC 1 A (Load resistance) Proportional cycle : 1 ~ 1,000 sec

General specification

Power Supply Voltage	100 – 240 V AC, 50 – 60 ㎐
Voltage fluctuation	±10 % of the Power Supply Voltage
Power consumption	12 VA
Ambient temperature	0 ~ 50 ℃
Ambient humidity	35 ~ 85 % RH (without dew condensation)
Storage temperature	–25 ~ 65 ℃
Vibration	10 – 55 ㎐, peak amplitude 0.75 ㎜ for 2 hrs each in 3 axis direction
Shock	300 ㎧, 3 times each in 3 axes direction
Weight	Approx. 700 g

Range and input code chart

Classification	Code	Input type	Range (℃)	Accuracy
Thermocouple	K0	K	−200 ~ 1,370	Bigger one between the ±(0.3 % of FS ±1 Digit) or ±2 ℃
	K1	K	−199.9 ~ 999.9	
	J0	J	−200 ~ 1200	
	J1	J	−199.9 ~ 999.9	
	E0	E	−199.9 ~ 999.9	
	E1	E	−199.9 ~ 999.9	
	T0	T	−199.9 ~ 400.0	
	R0	R	0 ~ 1700	
	R1	R	0.0 ~ 999.9	
	B0	B	0 ~ 1800	
	B1	B	0.0 ~ 999.9	
	S0	S	0 ~ 1700	
	S1	S	0.0 ~ 999.9	
	L0	L	−199.9 ~ 900.0	
	N0	N	−200 ~ 1300	
	N1	N	−199.9 ~ 999.9	
	U0	U	−199.9 ~ 400.0	
	W0	W	0 ~ 2300	
	A0	PL2	0 ~ 1390	
RTD	P0	Kpt100 Ω	−199.9 ~ 500.0	Bigger one between the ±(0.3 % of FS ±1 Digit) or ±0.8 ℃
	D0	Pt100 Ω	−199.9 ~ 600.0	
DC voltage	V0	0 – 5 V	−199.9 ~ 999.9	± (0.3 % of FS ± 1 Digit)
	V1	1 – 5 V	−199.9 ~ 999.9	
	V2	0 – 10 V	−199.9 ~ 999.9	

Dimension and panel cutout (unit : ㎜)

MC9

● Dimension

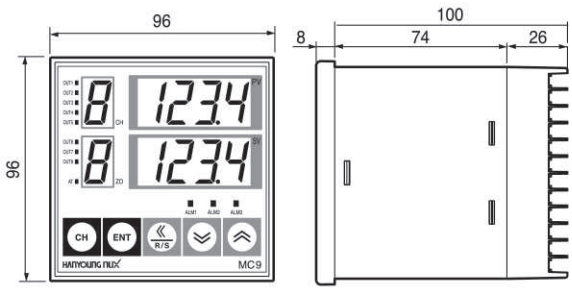

● Panel cutout

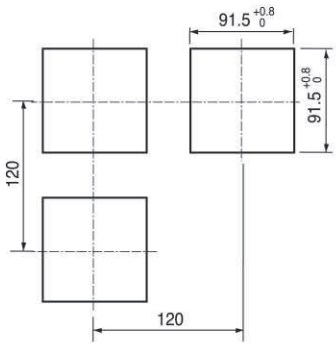

Connection diagram

■ Terminal arrangement plan

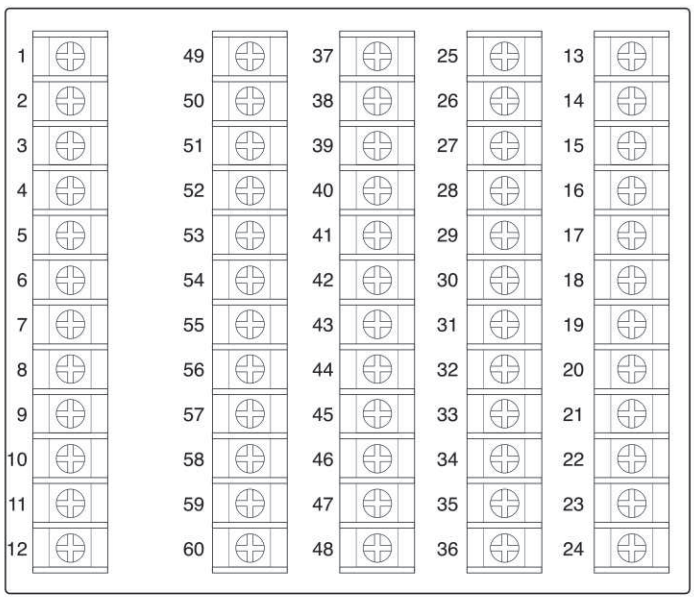

■ Output 1 ~ 4

Terminal number	Description	
1	L 100 – 240 V AC	Power input
2	N	
3	NO	Alarm 1 output
4		
5	NO + – (1) (2) (3)	Output 1 (1) relay (2)SSR/current output (3)Triac
6		
7	NO + – (1) (2) (3)	Output 2 (1) relay (2)SSR/current output (3)Triac
8		
9	NO + – (1) (2) (3)	Output 3 (1) relay (2)SSR/current output (3)Triac
10		
11	NO + – (1) (2) (3)	Output 4 (1) relay (2)SSR/current output (3)Triac
12		

■ Output 5 ~ 8

Terminal number	Description	
49	NO	Alarm 2 output
50		
51	NO	Alarm 3 output
52		
53	NO + –	Output 5 (1) relay (2)SSR/current output (3)Triac
54		
55	NO + –	Output 6 (1) relay (2)SSR/current output (3)Triac
56		
57	NO + –	Output 7 (1) relay (2)SSR/current output (3)Triac
58		
59	NO + –	Output 8 (1) relay (2)SSR/current output (3)Triac
60		

■ Option 1 (1)-DI/COM

Terminal number	Description	
37	DI	Contact input
38		(Run/Stop)
39	DI 1	Contact input
40	DI 2	
41	DI 3	(Memory Zone)
42	DI SET	
43	COM	
44	SG SG	Communication
45	TX(+) TX	(1)RS-422A
46	TX(-) RX (2)	/485
47	RX(+)	(2)RS-232C
48	RX(-) (1)	

■ Option 2 (2)-HBA

Terminal number	Description	
37	CT1	CT input
38	CT2	
39	COM	
40	CT3	
41	CT4	
42	COM	
43	CT5	
44	CT6	
45	COM	
46	CT7	
47	CT8	
48	COM	

■ Input 1 ~ 4 channel

Terminal number	Description	
13	RTD	Channel 1
14	TC + V DC	RTD
15	+ –	TC : Thermocouple
	–	V DC : voltage
16	RTD	Channel 2
17	TC + V DC	RTD
18	+ –	TC : Thermocouple
	–	V DC : voltage
19	RTD	Channel 3
20	TC + V DC	RTD
21	+ –	TC : Thermocouple
	–	V DC : voltage
22	RTD	Channel 4
23	TC + V DC	RTD
24	+ –	TC : Thermocouple
	–	V DC : voltage

■ Input 5 ~ 8 channel

Terminal number	Description	
25	RTD	Channel 5
26	TC + V DC	RTD
27	+ –	TC : Thermocouple
	–	V DC : voltage
28	RTD	Channel 6
29	TC + V DC	RTD
30	+ –	TC : Thermocouple
	–	V DC : voltage
31	RTD	Channel 7
32	TC + V DC	RTD
33	+ –	TC : Thermocouple
	–	V DC : voltage
34	RTD	Channel 5
35	TC + V DC	RTD
36	+ –	TC : Thermocouple
	–	V DC : voltage

SM100

Board type various channels temperature controller

- Less space occupied because of board layer type
- 20 channels single body type digital temperature controller
- ±0.5 % display accuracy of max range
- Various alarm function (contact output 3 contacts)
- Communication function built in (RS485 / 422)

Suffix code

Model	Code			Description
SM100-	□	□	□	Board type various channels temperature controller
Input type	K			K type thermocouple input
	P			Pt100 Ω RTD input
Output form		N		No control output (exclusive for measured value)
		A		Control output
Number of control contact			12	12 channel
			16	16 channel
			20	20 channel

Specification

Input

Model		SM100-□□ 12	SM100-□□ 16	SM100-□□ 20
Number of channels		12 channel	16 channel	20 channel
External connection structure		Connection by the terminal block		
Measurement input	Input type	Thermocouple(K type), RTD (Pt100 Ω IEC 751)		
	Display accuracy	±0.5 % of FS (※±0.5 % of max range)		
	R.J.C compensation accuracy	±3.5 ℃		
	Sampling time	1 sec		
	Input filter	0 ~ 120.0 sec		
	Burnout action	Thermocouple : Up Scale when break RTD: Up Scale when break		
	Input compensation	±1200.0 ℃		
Contact input	Internal switch	Internal switch : RUN/STOP selectable by the internal slide switch		

Setting and LED display specification

Model		SM100-□□ 12	SM100-□□ 16	SM100-□□ 20
Setting and LED display	Setting type	Communication program		
	High setting limitation	Thermocouple : -199.9 ~ 999.9 ℃, RTD : -199.0 ~ 640.0 ℃ But, low setting limitation 〈 high setting limitation		
	Low setting limitation			
	Number of setting contact	12	16	20
	Memory type	Non-volatile semi conductor memory		
	LED display	Power (PWR), Transmitting / Receiving (TX, RX), Control output (12~20 contacts), alarm output 3 contacts		

Control output specification

Control output	Output type	SSR driving voltage pulse output (min 12 V DC), resistive load (min 600 Ω)
	Control action	Time proportional PID or ON / OFF control
	Proportional cycle	1 ~ 100 sec
	Proportional band	0 ~ 1200.0 ℃
	Integral time	1 ~ 3600 sec
	Derivative time	1 ~ 3600 sec
	Over integral limitation (ARW)	0.1 ~100.0 %, ※ "0"setting (Auto)
	Hysteresis	0 ~ 120.0 ℃ (※ ON/OFF width when selecting ON/OFF control)
	Manual reset	0.0 ~ 100.0 % (※ when selecting ON/OFF control)
	Output amount in emergency situation	0.0 ~ 100.0 % (output amount)
	Output limit	0 ~ 100 %
	Output action change	Direct/Reverse action (selectable by internal parameter)

Event output (alarm output) spec

Event output	Number of output contact	1a (Normal Open) 3 contacts
	Number of setting contact	3 contacts (includes alarm, loop break)
	Output type	15 kinds (refer to the types of alarm action) Including the loop break alarm output, it is applied to the each channels commonly.
	Hysteresis	0 ~120.0 ℃ (※ ON/OFF width)
	Relay capacity	250 V AC 5 A (30 V DC 5 A)
	Contact life expectancy	100,000 times (electrical)

Communication spec

Communication spec	Communication rating	RS422/485 (4 wire type)
	Network	Multi-drop
	Synchronizing system	Half duplex
	Max number of connection	15 devices (Including host computer) ※ 1 ~ F, Address setting type by HEX BCD switch
	Transmitting code	ASCII
	Communication distance	1.2 ㎞ max
	Communication speed	19200 bps
	Data length	8 Bit, (Parity : Even, Stop bit : 1)
	Communication protocol	PC Link with SUM
	Response time	Receiving process time + (response setting time × 25 ㎳)

General specification

General specification	Power Supply Voltage	100 – 240 V AC (50 – 60 ㎐)
	Power consumption	25 VA max
	Insulation resistance	20 ㏁ min (500 V DC mega) between power terminal and earth terminal
	Dielectric strength	2000 V AC for 1 min, between power terminal and earth terminal
	Ambient temperature	0 ~ 50 ℃
	Ambient humidity	20 ~ 85 % RH (no dew condensation)
	Storage temperature	-20 ~ 70 ℃ (no dew condensation)
	Vibration resistance	10 ~ 55 ㎐ 19.6 ㎧
	Shock resistance	196 ㎧
	Weight	Approx. 800 g

Input range

General specification	Range	Reference
Thermocouple (K TYPE)	-199.9 ~ 999.9 ℃	Selectable by the suffix code
RTD (Pt100 Ω)	-199.0 ~ 640.0 ℃	

System composition

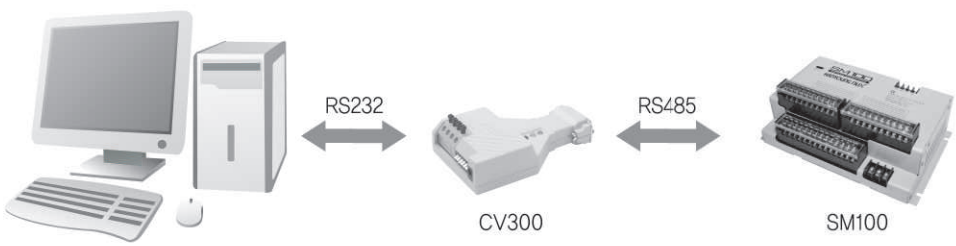

Connection diagram

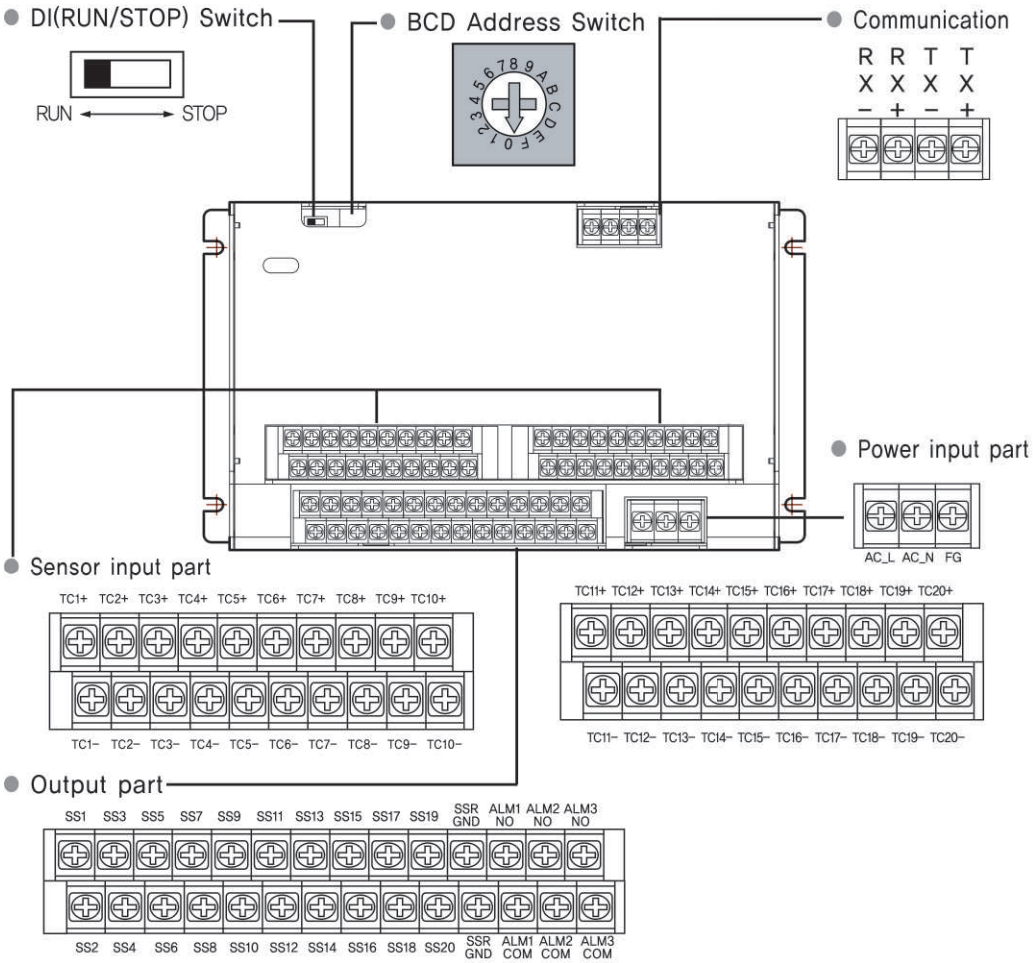

Dimension and panel cutout (unit : ㎜)

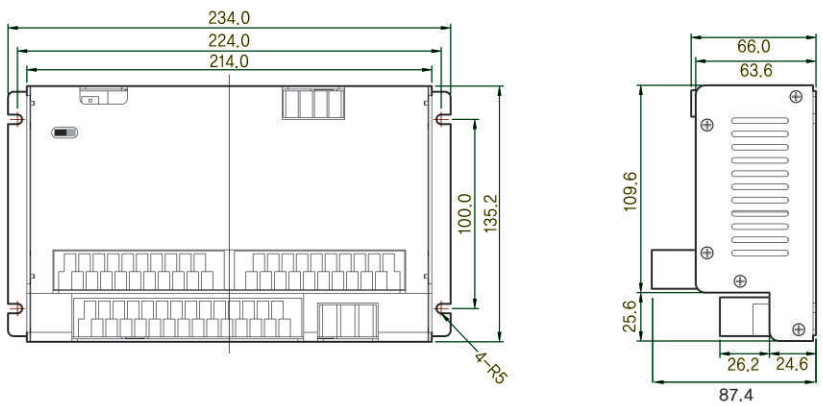

KF Series

Digital temperature controller

- Proportional control, or ON/OFF control selectable internally
- Simple temperature setting
- Deviation alarm setting
- Clear digital indication
- Direct action/reverse action selectable internally

Suffix code

Mode		Code						Description
KF	□ –	□	□	□	□	□	□	Digital temperature controller
Dimension	2							48(W) X 96(H) ㎜
	4							48(W) X 48(H) ㎜
	7							72(W) X 72(H) ㎜
	9							96(W) X 96(H) ㎜
Control type		P						Proportional control and ON/OFF control (selectable by internal switch)
		O						Indicator (Only for indication)
Input			K					K thermocouple
			J					J thermocouple
			R					R thermocouple
			D					RTD KPt100 Ω
			P					RTD Pt100 Ω (IEC)
			V					1 – 5 V DC
			C					4 – 20 ㎃ DC
Control output				M				Relay
				C				SCR (current output, 4 – 20 ㎃ DC)
				S				SSR (voltage pulse output, 12 V DC)
Alarm output (Model KF4 excluded)					N			None
					O			High alarm
					P			Low alarm
					W			High/Low alarm
Control action						R		Reverse action (heating control), ※ Selectable by the internal deep switch
						D		Direct action (cooling control) ※ KF4 need separate order
Range code								Refer to the range and input code

(Cautious) digital indicator (only for indication: KF4-O, KF7-O, KF9-O) selects range code just like KF□-O8

Specification

Input

Thermocouple	K, J, R
RTD input	KPt 100 Ω, Pt 100 Ω
DC rated voltage	1 – 5 V DC, 4 – 20 ㎃ DC
Input sampling time	500 ㎳
Input display resolution	Usually less than 1 ℃
Input impedance	Thermocouple min 1 ㏁, DC voltage input approx. 1 ㏁
Allowable signal source resistance	Thermocouple max 250 Ω. DC voltage Max 2 ㎏
Allowable wiring resistance	RTD max 10 Ω. (however resistance among 3 wires should be same)
Allowable input voltage	Within ±10 V (thermocouple, RTD), within ±20 V (DC voltage)
Cold junction compensation error	±2.0 ℃ (0 ~ 50 ℃)

Performance

Display accuracy	± 1 % of FS ± 1 Digit
Insulation resistance	Min 20 ㏁ (500 V DC)
Dielectric strength	2,000 V AC. 50 / 60 Hz, for 1 min (between the different recharging terminal from each other)

Control function and output

Control type	Proportional control, ON/OFF control (selection by internal deep switch, default value:proportional control)
Control action	Reverse action or direct action (selection by internal deep switch, but KF4 is depending on the suffix code)
Setting range	Same as the input range
Proportional band	0.1 ~ 10.0 % of FS
Manual reset(M.R)	±50 % of MV(amount of output)
Proportional cycle	Approx. 20 sec (relay output), approx. 2 sec (SSR output)
Hysteresis	1 ~ 20 ℃ (when performing ON/OFF control, it is due to the proportional band setting volume)
Input signal break detection	Output becomes OFF when exceeding 10 ℃ of range limit
Alarm type	High deviation alarm, low deviation alarm, high/low deviation alarm (due to the suffix code)
Alarm setting range	0 ~ 50 ℃ deviation alarm, but KF9 is within the range limit as an absolute alarm
Alarm hysteresis	Fix 1 ℃

● Output

Control output	Relay output	Contact capacity : 1 c, 250 V AC, 5 A (resistive load)
	SSR	Approx. more than 12 V DC (resistive load min 800) with disconnection, limits from approx 50 ㎃
	Current(SCR)	4 – 20 ㎃ DC (resistive load max 600 Ω)
Alarm output	Temperature alarm (relay)	Contact capacity : 1 c, 250 V AC, 5 A (resistive load) but Model KF7 is 1a contact (Model KF4 : No alarm output)

General specification

Power Supply Voltage	100 – 240 V AC, 50 – 60 Hz
Voltage fluctuation	±10 % of the Power Supply Voltage
Power consumption	3 VA max.
Ambient temperature	0 ~ 50 ℃
Ambient humidity	35 ~ 85 % RH (without dew condensation)
Storage temperature	–25 ~ 65 ℃
Vibration	10 – 55 ㎐, Peak amplitude 0.76 ㎜ for 2 min each in 3 axis direction.
Shock	300 ㎧, to direction 6 each 3 times
Weight	376 g(KF9), 256 g(KF7), 158 g(KF4), 276 g(KF2)

Range and input code

Classification	Code	Input type	Range (℃)	Accuracy
Thermocouple	8	K	0 ~ 399	±1 % of FS ±1 Digit
	11	K	0 ~ 999	
	12	K	0 ~ 1199 *	
	8	J	0 ~ 399	
	13	R	600 ~ 1699 *	
RTD	2	Pt100 Ω	–99 ~ 99	
	8	Pt100 Ω	0 ~ 399	
Voltage/current (DC)	4	1 – 5 V DC	0 ~ 99	
	4	4 – 20 ㎃ DC	0 ~ 99	

* KF2 and KF4 cannot select the code number 12 and 13

Dimension and panel cutout (Unit : ㎜)

KF4

● Dimension

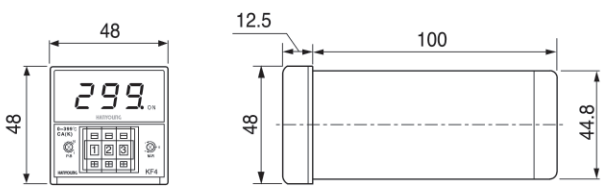

● Panel cutout

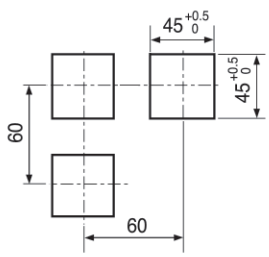

KF9

● Dimension

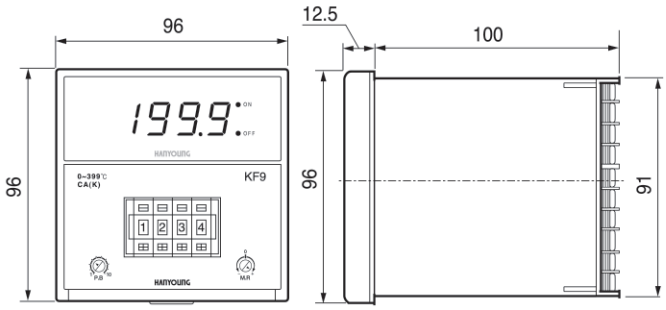

● Panel cutout

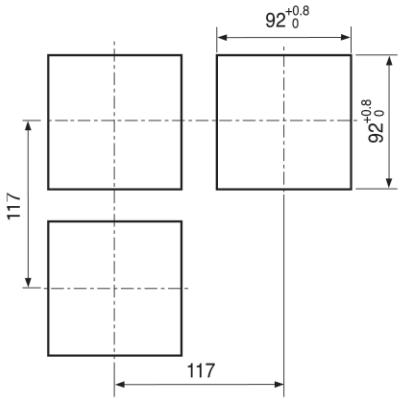

KF2

● Dimension

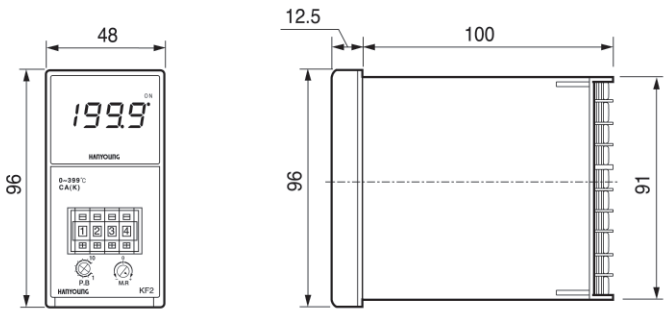

● Panel cutout

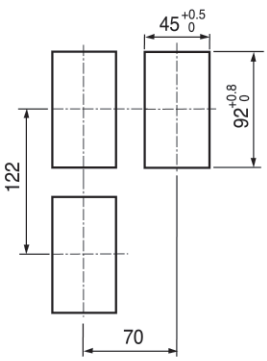

KF7

● Dimension

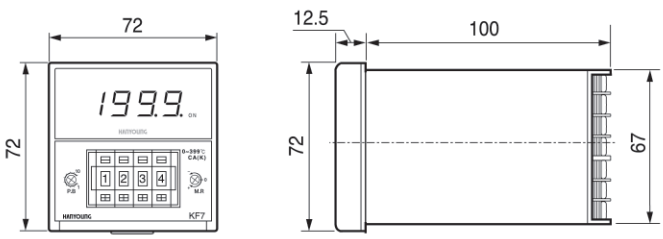

● Panel cutout

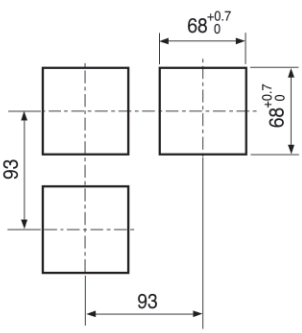

Connection diagram

■ KF4

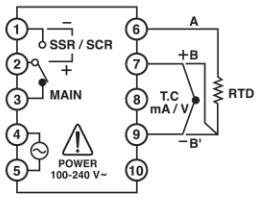

■ KF40

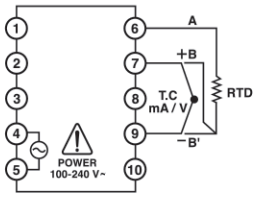

■ KF9

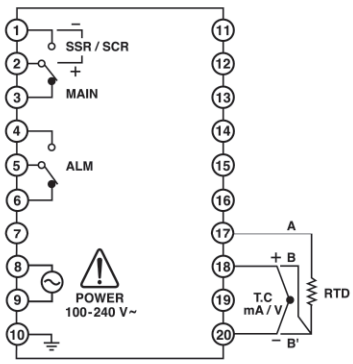

■ KF90

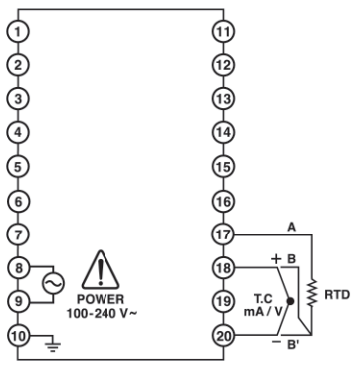

■ KF2

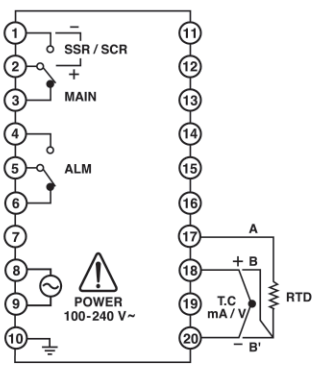

■ KF20

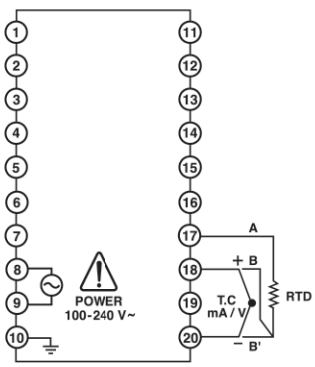

■ KF7

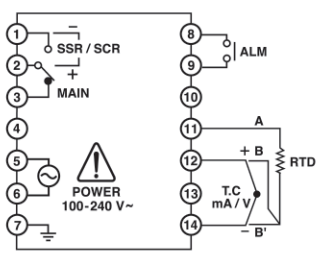

■ KF70

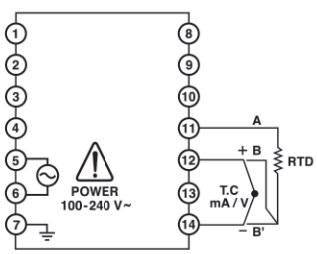

HY Series

Economical digital temperature controller

- Proportional control or ON/OFF control
- Simple temperature setting
- Alarm setting(HY-8200S)
- Clear digital indication

Suffix code

Model		Code						Description
HY-	□	□	□	□	□	□	□	Digital temperature controller
Dimension	8000S							96 X 96 ㎜
	8200S							96 X 96 (alarm setting general specification)
	72D							72 X 72
	48D							48 X 48
Control type		F						ON/OFF control
		P						Proportional control
Input			K					K thermocouple
			J					J thermocouple
			R					R thermocouple
			D					RTD KPt 100 Ω
			P					RTD Pt 100 Ω (IEC)
			V					1 – 5 V DC
			C					4 – 20 ㎃ DC
Control output				M				Relay
				C				Current output (4 – 20 ㎃ DC)
				S				SSR (voltage pulse output, 12 V DC)
Alarm output					N			None
					O			High alarm (HY-8200S)
Control action (internal selection)						R		Reverse action (heating control)
						D		Direct action (cooling control)
Range code								Refer to the range and input code

Specification

Input

Thermocouple	K, J, R
RTD input	Pt 100 Ω, KPt 100 Ω(139.16 Ω when temperature is 100 ℃)
DC rated voltage	1 – 5 V DC, 4 – 20 ㎃ DC
Input sampling time	500 ㎳
Input display resolution	Usually less than 1C
Input impedance	Thermocouple min 1 ㏁, DC rated voltage approx. 1 ㏁
Allowable signal source resistance	Thermocouple max 250 Ω. DC voltage max 2 ㎏
Allowable wiring resistance	RTD (max 10 Ω, however resistance among 3 wires should be same)
Allowable input voltage	Within ±10 V (thermocouple, RTD), within ±20 V (DC voltage)
Input compensation	Due to the internal volume
Cold junction compensation error	±2.0 ℃ (0 ~ 50 ℃)

Performance

Display accuracy	±1 % of FS ±1 Digit
Insulation resistance	Min 20 ㏁ (500 V DC)
Dielectric strength	2,000 V AC 50 / 60 ㎐, for 1 min (between the different recharging terminal from each other)

Control function and output

Control type	Proportional control, ON/OFF control (selected by the suffix code)
Control action	Reverse action or direct action (selected by the suffix code)
Range setting	Same as the input range
Proportional band	0.1 ~ 10.0 % of FS
Manual reset (M.R)	±50 % of ㎷ (amount of output)
Proportional cycle	Approx. 25 ~ 30 sec (relay output), approx. 2 ~ 4 sec (SSR output)
Hysteresis	0.2 % fixed (when performing ON/OFF control)
Input signal break detection	Output become OFF when exceeding 10 ℃ of range limit
Alarm type	High absolute alarm, only with Model HY-8200S
Alarm setting range	Within range limit
Alarm hysteresis	Fix 1 ℃

● Output

Control output	Relay	Contact capacity : 1 C, 250 V AC, 3 A (resistive load)
	SSR	Approx. more than 12 V DC (resistive load min 800 Ω)
	Current	4 – 20 ㎃ DC (resistive load max 600 Ω)
Alarm output	Relay	Contact capacity : 1 c, 250 V AC, 5 A (resistive load) ※only with Model HY-8200S

General specification

Power supply	110 – 220 V AC, 50 – 60 Hz dual usage but Model HY-48D selects 110/220V by using internal switch
Voltage fluctuation	± 10 % of the power voltage
Power consumption	3 VA max
Ambient temperature	0 ~ 50 ℃
Ambient humidity	35 ~ 85 % RH (without dew condensation)
Storage temperature	-25 ~ 65 ℃
Vibration	10 – 55 ㎐, peak amplitude 0.76 ㎜ for 2 hrs each in 3 axis direction
Shock	300 ㎧, to the direction 6 each 3 times
Weight	700 g (HY-8000S), 750 g (HY-8200S), 500 g (HY-72D), 450 g (HY-48D)

Range and input code

Classification	Code	HY-8000S, 8200S		HY-72D		HY-48D	
		Input type	Range (℃)	Input type	Range (℃)	Input type	Range (℃)
Thermocouple	4	–	–	–	–	K	0 ~ 299
	5	–	–	–	–		0 ~ 399
	6	K, J	0 ~ 199	K, J	0 ~ 199	–	–
	7		0 ~ 299		0 ~ 299		
	8		0 ~ 399		0 ~ 399		
	9		–		0 ~ 599		
	10		0 ~ 599		0 ~ 799		
	11	K	0 ~ 799	K	–		
	12		–		0 ~ 1199		
	13		0 ~ 1199	R	600 ~ 1699		
	14	R	600 ~ 1699	–	–		
RTD	1	–	–	–	–	Pt100 Ω	-49 ~ 49
	2	Pt100 Ω	-99 ~ 99	Pt100 Ω	-99 ~ 99		-99 ~ 99
	3		-99 ~ 199		-99 ~ 199		0 ~ 199
	4		0 ~ 99		0 ~ 99		0 ~ 299
	5		–		–		0 ~ 399
	6		0 ~ 199		0 ~ 199	–	–
	7		0 ~ 299		0 ~ 299		
	8		0 ~ 399		0 ~ 399		
Voltage/current (DC)	–	1 – 5 V	0 ~ 99	1 – 5 V	0 ~ 99	1 – 5 V	0 ~ 99
	–	4 – 20 ㎃	0 ~ 99	4 – 20 ㎃	0 ~ 99	4 – 20 ㎃	0 ~ 99

Dimension and panel cutout (Unit : ㎜)

HY-48D

● Dimension

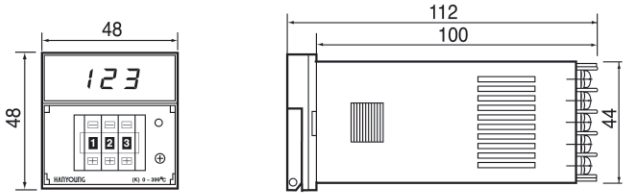

● Panel cutout

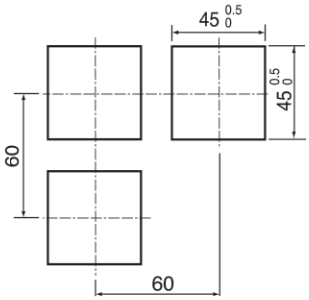

HY-72D

● Dimension

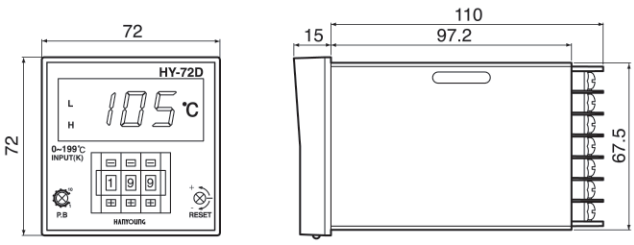

● Panel cutout

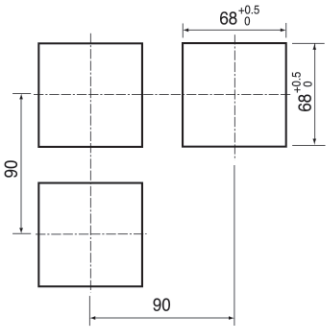

HY-8000S, 8200S

● Dimension

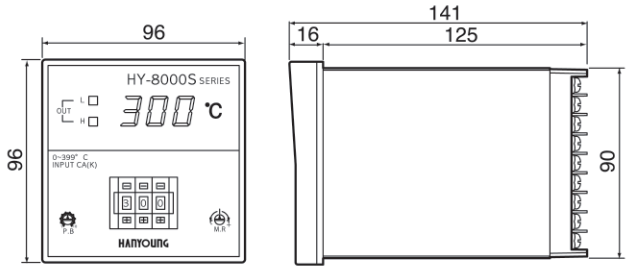

● Panel cutout

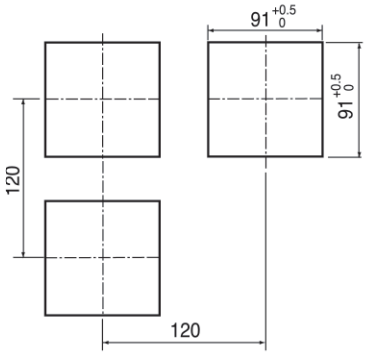

Connection diagram

HY-48D

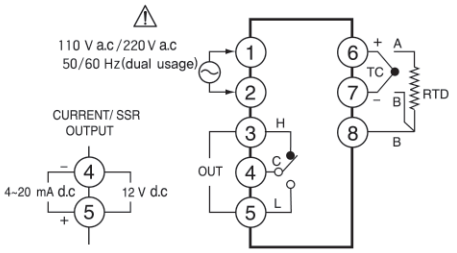

HY-72D

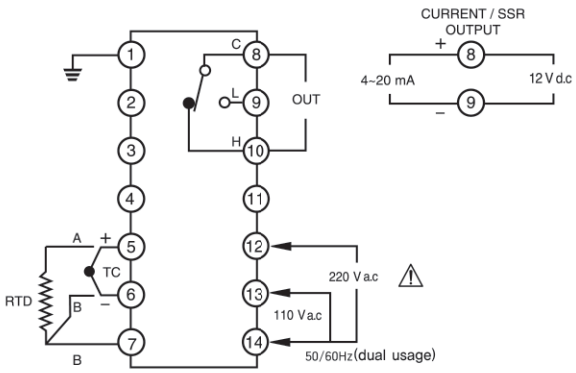

(Cautious) Model HY-48D can select 110 V AC or 220 V AC by using the internal deep switch
(default : 220 V AC)

HY-8000S

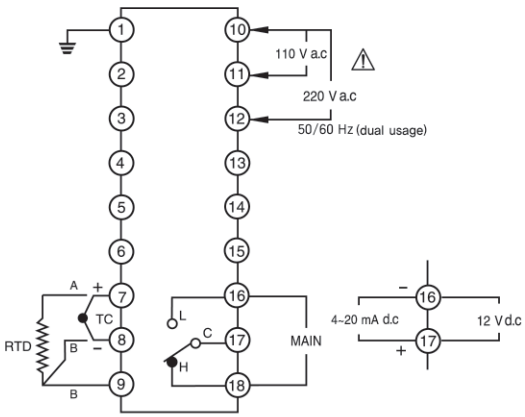

HY-8200S

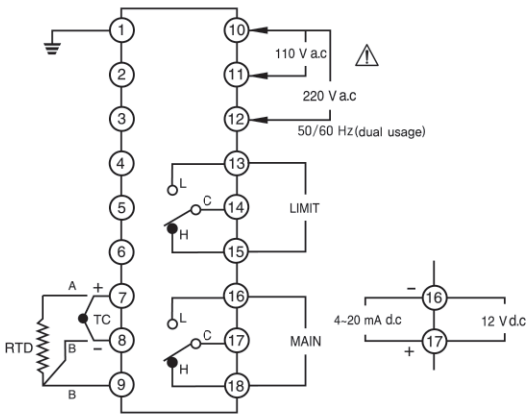

DF Series

Economical digital temperature controller

- Proportional control or ON/OFF control
- Simple temperature setting
- Auxiliary output setting (SUB)
- Clear digital indication
- Simple 8 pin socket type (DF4)

Suffix code

Model		Code					Description
DF	□–	□	□	□	□	□	Economical digital temperature controller
Dimension	2						48(W) X 96(H) ㎜
	4						48(W) X 48(H) ㎜ (socket type, 8 pin)
Control type		F					ON/OFF control
		P					Proportional control
Input			K				K thermocouple
			J				J thermocouple
			D				RTD KPt100 Ω
			P				RTD Pt100 Ω (IEC)
			V				1 – 5 V DC
			C				4 – 20 ㎃ DC
Control output				M			Relay
				C			Current output (4 – 20 ㎃ DC)
				S			SSR (voltage pulse output, 12 V DC)
Auxiliary output (SUB) ※ only with DF2					N		None
					O		High deviation
					P		Low deviation
					W		High/Low deviation
Control action (internal selection)						R	Reverse action (heating control)
						D	Direct action (cooling control)
Range code							Refer to the range and input code

※ Model DF4 selects proportional control/ON–OFF control by using internal deep switch.

※ Model DF4 requires displaying voltage power such as for 220V and for 110V.

Specification

Input

Thermocouple	K, J
RTD input	KPt100 Ω, Pt100 Ω
DC rated voltage	1 – 5 V DC, 4 – 20 ㎃ DC
Input sampling time	500 ㎳
Input display resolution	Usually less than 1 ℃
Input impedance	Thermocouple and DC voltage input (㎷) : min 1 ㏁, DC voltage input (V) : approx. 1 ㏁
Allowable signal source resistance	Thermocouple (max 250 Ω). DC voltage (max 2 ㎏)
Allowable wiring resistance	RTD max (10 Ω however resistance among 3 wires should be same)
Allowable input voltage	Within ±10 V (thermocouple, RTD, DC voltage (㎷)), within ±20 V (DC voltage(V))
Input compensation	Due to the internal volume
Cold junction compensation error	±2.0 ℃ (0 ~ 50 ℃)

Performance

Display accuracy	±1 % of FS ±1 Digit
Insulation resistance	Min 20 ㏁ (500 V DC)
Dielectric strength	2,000 V AC, 50 / 60 ㎐, for 1 min (between the different recharging terminal from each other)

Control function and output

Control type	Proportional control and ON/OFF control (selected by suffix code)
Control action	Reverse action or direct action (selected by suffix code)
Range setting	Same as the range and input code
Proportional band	1 ~ 10 % of FS
Manual reset(M.R)	±3 % of ㎷ (amount of output)
Proportional cycle	Approx. 20 sec (relay output), approx. 2 sec (SSR output)
Hysteresis	0.2 % fixed (when performing ON/OFF control)
Input signal break detection	Output become OFF when exceeding 10 ℃ of range limit
Auxiliary output (SUB)	By suffix code (only with Model DF2)
Auxiliary output setting range	Within the range
Auxiliary output hysteresis	Fix 1 ℃

● Output

Control output	Relay	Contact capacity : 1 C, 250 V AC, 3 A (resistive load)
	SSR	Approx. more than 12 V DC (resistive load min 800 Ω)
	Current	4 – 20 ㎃ DC (resistive load max 600 Ω)
Alarm output	Relay	Contact capacity : 1 C, 250 V AC, 3 A (resistive load)

General specification

Model	DF2	DF4(8 pin type)
Power Supply Voltage	110 / 220 V AC, 50 / 60 Hz	220 V AC, 110 V AC, 50 / 60 Hz. (Order separately)
Voltage fluctuation	±10 % of the Power Supply Voltage	
Power consumption	3 VA max	
Ambient temperature/humidity	0 ~ 50 ℃, 35 – 85 % RH (without dew condensation)	
Storage temperature	–25 ~ 65 ℃	
Vibration	10 – 55 Hz, peak amplitude 0.76 ㎜ for 2 min each in 3 axis direction	
Shock	300 ㎧, to the direction 6 each 3 times	
Weight	Approx. 450g	Approx. 200g

※ Power supply voltage for DF4 is divided into 110 V and 220 V

Range and input code

Classification	Code	DF2		DF4 / DF4T	
		Input type	Range (℃)	Input type	Range (℃)
Thermocouple	4	K, J	–	K, J	0 ~ 199
	5		0 ~ 199		0 ~ 299
	6		0 ~ 299		0 ~ 399
	7		0 ~ 399		0 ~ 599
	8		–	K	0 ~ 799
RTD	1	Pt100 Ω	–99 ~ 99	Pt100 Ω	–
	2		–		–99 ~ 99
	3		–		0 ~ 99
	4		0 ~ 99		0 ~ 199
	5		0 ~ 199		0 ~ 299
	6		0 ~ 299		0 ~ 399
	7		0 ~ 399		–
DC voltage	–	1 – 5 V DC	0 ~ 99	1 – 5 V DC	0 ~ 99
DC current	–	4 – 20 ㎃ DC	0 ~ 99	4 – 20 ㎃ DC	0 ~ 99

Dimension and panel cutout (Unit : ㎜)

DF2

● Dimension

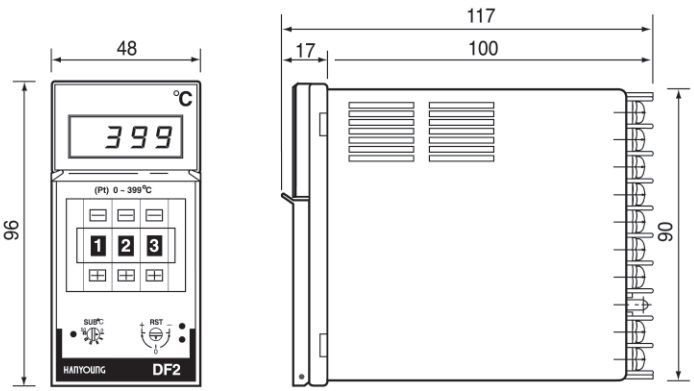

● Panel cutout

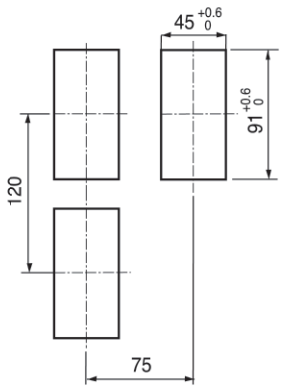

DF4

● Dimension

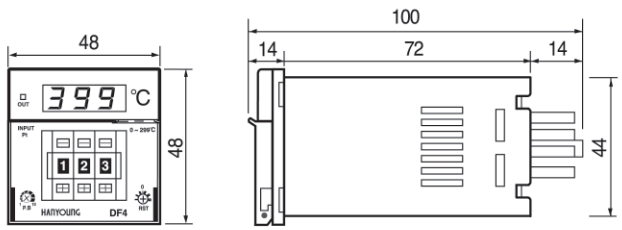

● Panel cutout

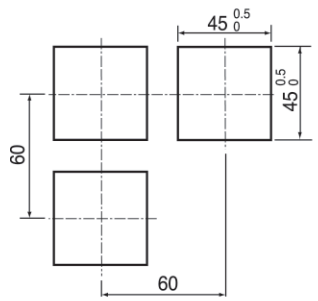

Connection diagram

■ DF2 (alarm output built in)

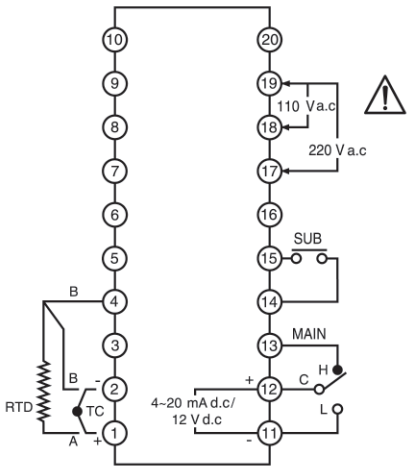

■ DF2

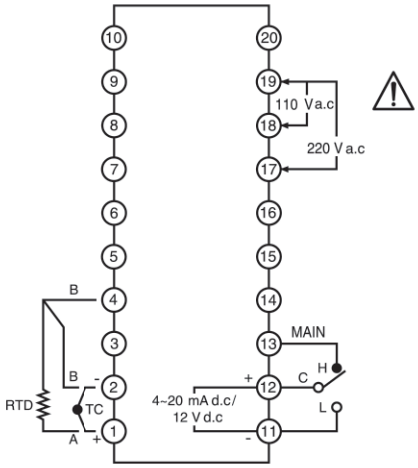

■ DF4

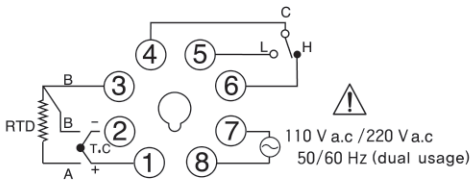

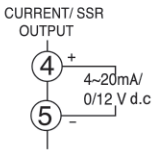

※ Power supply voltage is divided into 110 V and 220 V.

BR6

Digital temperature controller

- Cooling control and heating control selection
- Alarm output and timer output selection
- ON / OFF and proportional control selection
- 0.1 ℃ / 1 ℃ selection
- Delay output time setting

Suffix code

Model	Code				Description
BR6-	□	□	□	□	Digital temperature controller 72(W) × 35(H)
Control type	F				ON/OFF control
	P				Proportional control
Input		D			HANYOUNG NUX exclusive sensor (TH-540D) *Diode
		N			HANYOUNG NUX exclusive sensor (TH-540N) *Thermistor
Control output			M		Relay
			S		SSR (voltage pulse output 5 V DC)
Power Supply Voltage				P3	10 - 24 V DC / AC, 50 - 60 Hz
				P4	100 - 240 V AC, 50 - 60 Hz

Specification

Input

Input type (sensor)	HANYOUNG NUX exclusive sensor (TH-540D), (TH-540N)
Input sampling time	500 ㎳
Input display resolution	1 ℃ / 0.1 ℃ display selection (usually less than the minimum indicated value)
Input impedance	TH-540D (84 KΩ), TH-540N (5 KΩ)
Input compensation	±30 ℃ (±30.0 ℃)
Input signal break detection	When exceeding 5 ℃ from the max or min range, control output becomes OFF

Performance

Display accuracy	±1 % of FS ±1 Digit
Insulation resistance	Min 20 MΩ (500 V DC)
Dielectric strength	2,000 V AC, 50 / 60 Hz, for 1 min (between the different recharging terminal from each other)

Control function and output

Control type	ON/OFF or proportional control
Control action	Reverse action (heating) or direct action (cooling)
Manual reset	1 ~ 100 % (proportional band)
ON/OFF control hysteresis	1 ~ 50 ℃ (1.0 ~ 50.0 ℃)
ON/OFF control output delay time	0 ~ 240 sec
Proportional band	1 ~ 100 ℃
Proportional cycle	Relay output (fixed with 20 sec), SSR output (fixed with 2 sec)
1 ℃ / 0.1 ℃ display	Selected by the internal parameter
Auxiliary output	Select either alarm or defrosting timer function
Alarm type	High alarm (absolute value) with heating control and low alarm (absolute value) with cooling control
Alarm setting range	−50 ~ 150 ℃ (−50.0 ~ 150.0 ℃)
Alarm hysteresis	1 ~ 50 ℃ (0.2 ~ 50.0 ℃)
Alarm output delay time	0 ~ 240 sec
Defrosting timer unit selection	Select minute or second by internal parameter
Defrosting output time setting	ON time (0 ~ 3600 minute(sec)), OFF time(0 ~ 3600 minute(sec))

● Output

Control output	Relay output	Contact composition : S.P.D.T, 250 V AC, 5 A (resistive load)
	SSR	Approx 5 V DC (resistive load min 500 Ω), approx. 50 mA max
Alarm output (alarm/defrost)	Relay	Contact composition : 1 c, 250 V AC, 5 A (resistive load)

General specification

Power Supply Voltage	100 – 240 V AC, 50 – 60 Hz 10 – 24 V DC / AC, 50 – 60 Hz
Voltage fluctuation	±10 % of the Power Supply Voltage
Power consumption	max 5 VA (220 V AC 60 Hz)
Ambient temperature	0 ~ 50 ℃
Ambient humidity	35 ~ 85 % RH (without dew condensation)
Storage temperature	-25 ~ 65 ℃
Vibration	10 – 55 Hz, peak amplitude 0.76 ㎜ for 2 min each in 3 axis direction
Shock	300 ㎧, to the direction 6 each 3 times
Weight	116 g

Range and input code chart

Classification	Code	Input type	Range (℃)	Accuracy
HANYOUNG NUX exclusive sensor	D	TH-540D	-50.0 ~ 150.0	±2 ℃
	N	TH-540N	-40.0 ~ 90.0	±1.5 ℃

Dimension and panel cutout (unit : ㎜)

● Dimension

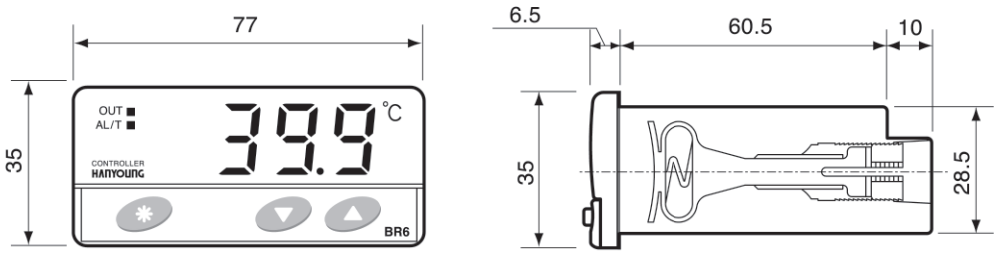

● Panel cutout

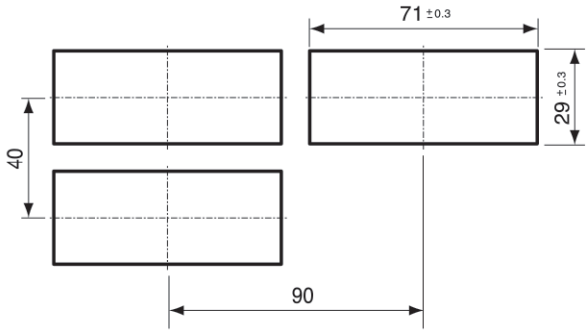

● Sensor (TH540D/TH540N)

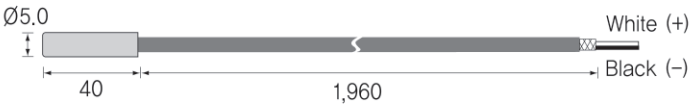

(Caution) In case of using Diod sensor, the max temperature error may be ±4 ℃
(Sensor error ±2 ℃ and controller error ±2 ℃)

Connection diagram

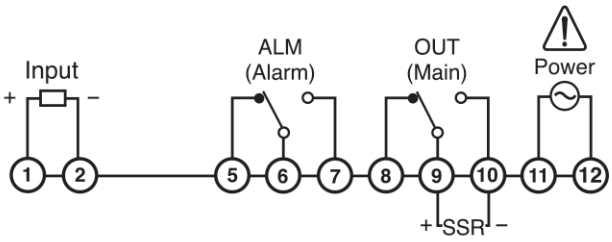

ED6

Digital temperature controller

- Cooling control and heating control selection
- Alarm output and timer output selection
- ON/OFF and proportional control selection
- 0.1 ℃ / 1 ℃ selection
- Delay output time setting

Suffix code

Model	Code					Description
ED6 –	□	□	□	□	□	Digital temperature controller
Control type	F					ON/OFF control
	P					Proportional control
Input		K				Thermocouple K
		P				RTD Pt100 Ω (IEC)
		C				4 – 20 ㎃ DC (attach 250 Ω of external resistance), 1 – 5 V DC
Control output			M			Relay
			S			SSR (voltage pulse output 5 V DC)
Optional				A		Alarm or defrosting timer
				N		NONE
Power Supply Voltage					P3	10 – 24 V DC / AC, 50 – 60 ㎐
					P4	100 – 240 V AC, 50 – 60 ㎐

Specification

Input

Thermocouple input	K
RTD input	Pt100 Ω
DC rated voltage	1 – 5 V DC (4 – 20 ㎃ DC, 250 Ω attach external resistance)
Input sampling time	500 ㎳
Input display resolution	1 ℃ / 0.1 ℃ display selection (usually less than the min indication value)
Input impedance	Thermocouple 10 ㎆, RTD 200 ㎏, DC voltage 200 ㎏
Allowable signal source resistance	Thermocouple max 100 Ω, DC voltage max 2 ㎏
Allowable wiring resistance	RTD max 10 Ω (however resistance among 3 wires should be same)
Input compensation	±30 ℃ (±30.0 ℃)
Input scaling	–1,000 ~ 5,000 (–199.9 ~ 999.9) (TSL ~ TSH within the range)
Input signal break detection	Exceeding 10 ℃ from the max or min range will turn OFF the control output

Performance

Display accuracy	±0.5 % of FS ±1 Digit
Insulation resistance	Min 20 MΩ (500 V DC)
Dielectric strength	2,000 V AC, 50 / 60 Hz, for 1 min (between the different recharging terminal from each other)

Control function and output

Control type	Select ON/OFF or proportional control
Control action	Select reverse action (heating) or direct action (cooling)
Manual reset	1 ~ 100 % (amount of output)
ON/OFF control hysteresis	1 ~ 50 ℃ (1.0 ~ 50.0 ℃)
ON/OFF control output delay time	0 ~ 240 sec
Proportional band	1 ~ 100 ℃
Proportional cycle	Relay output (fix with 20 sec), SSR output (fix with 2 sec)
Position of decimal point selection	0 ~ 2 (with setting 0 : 200, with setting 1 : 20.0, with setting 2 : 2.00)
Auxiliary output function selection	Select alarm or defrosting timer
Alarm type	High alarm (absolute value) with heating control and low alarm (absolute value) with cooling control
Alarm setting range	-100 ~ 400 ℃ (-100.0 ~ 400.0 ℃)
Alarm hysteresis	1 ~ 50 ℃ (1.0 ~ 50.0 ℃)
Alarm output delay time	0 ~ 240 sec
Defrosting output time setting	ON time (0 ~ 999 minute), OFF time (0 ~ 999 minute)

● Output

Control output	Relay output	Contact composition : S.P.D.T, 250 V AC, 5 A (resistive load)
	SSR	Approx. 5 V DC (resistive load min 500 Ω), approx. 50 mA max
Alarm output (alarm/defrost)	Relay	Contact composition : 1 c, 250 V AC, 5A (resistive load)

General specification

Power Supply Voltage	100 – 240 V AC, 50 – 60 ㎐. 10 – 24 V DC / AC, 50 – 60 ㎐
Voltage fluctuation	±10 % of the power supply voltage
Power consumption	Max 5 VA (220 V AC 60 ㎐)
Ambient temperature	0 ~ 50 ℃
Ambient humidity	35 ~ 85 % RH (without dew condensation)
Storage temperature	–25 ~ 65 ℃
Vibration	10 – 55 ㎐, peak amplitude 0.76 ㎜ for 2 min each in 3 axis direction
Shock	300 ㎧, to the direction 6 each 3 times
Weight	116 g

Range and input code chart

Classification	Code	Input type	Range (℃)	Accuracy
Thermocouple	K	K	–80.0 ~ 999.9	± 0.5 % of FS ± 1 Digit
RTD	P	Pt100 Ω	–100.0 ~ 400.0	
Voltage/current (DC)	C	1 – 5 V	–1,000 ~ 5,000 (scaling)	
		4 – 20 ㎃		

※ Attach ±0.1 % of 250 Ω external resistance at the ends input terminal (both side) when input is within the range of 4 – 20 ㎃.

Dimension and panel cutout (unit : ㎜)

● Dimension

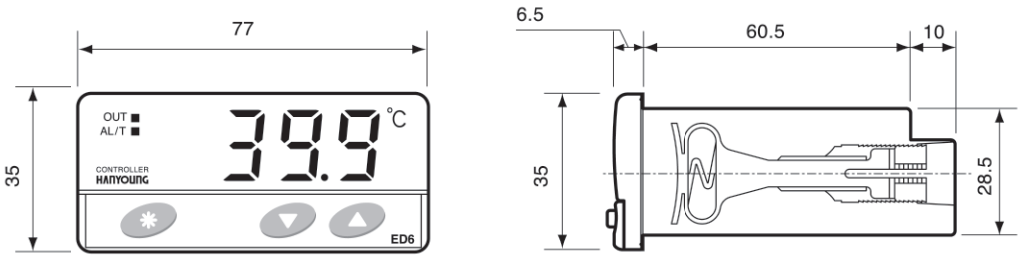

● Panel cutout

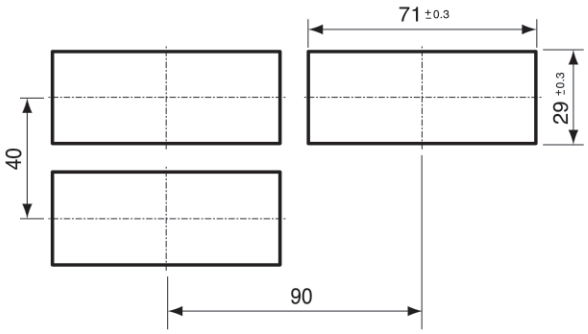

Connection diagram

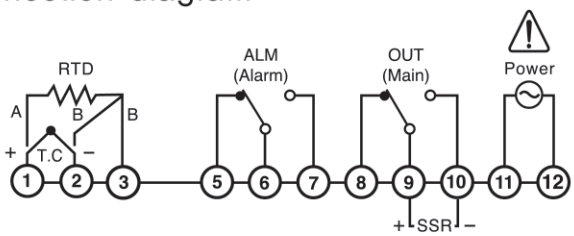

HD6

Digital temperature controller

- Exclusive use for vinyl house open/close motor control
- 1 stage and 2 stage control operation by the set value
- Hysteresis setting by ON/OFF control
- Operation by temperature and time setting
- 0.1C display function

Suffix code

Model	Code				Description
HD6-	□	□	□	□	Economical digital temperature controller
Control type	F				ON/OFF control
Input		N			HANYOUNG NUX exclusive sensor (TH-540N) *Thermistor
Control output			M		Relay
Power Supply Voltage				P4	100 – 240 V AC, 50 – 60 ㎐

Specification

Input

Input type (sensor)	HANYOUNG NUX exclusive sensor (TH-540D), (TH-540N).
Input sampling time	500 ㎳
Input display resolution	1 ℃ / 0.1 ℃ indication selection (usually less than the min displaying value)
Input impedance	TH-540D (84 ㎏), TH-540N (5 ㎏)
Input signal break detection	Control output becomes OFF when exceeding 5 ℃ from the max or min range

Performance

Display accuracy	±1 % of FS ±1 Digit
Insulation resistance	20 ㎆ min (500 V DC)
Dielectric strength	2000 V AC 50 / 60 ㎐ for 1min (between the different recharging part)

Control function and output

Control type		ON/OFF control
Control action		Measured temperature 〉 set temperature then Close output Measured temperature 〈 set temperature then Open output
Temperature setting		Open 1 action temperature setting : -40.0 ~ 100.0 ℃ (1 temperature set value 〈 measured value) Close 1 action temperature setting : -40.0 ~ 100.0 ℃ (1 temperature set value 〉 measured value) Open 2 action temperature setting : -1.0 ~ 100.0 ℃ (1 temperature + 2 temperature set value 〈 measured value) Close 2 action temperature setting : -1.0 ~ 40.0 ℃ (1 temperature + 2 temperature set value 〉 measured value)
Time setting		open 1 action ON time : 1 ~ 999 minute(sec) open 1 action OFF time : 1 ~ 999 minute(sec) close 1 action ON time : 1 ~ 999 minute(sec) close 1 action OFF time : 1 ~ 999 minute(sec) open 2 action ON time : 1 ~ 999 minute(sec) open 2 action OFF time : 1 ~ 999 minute(sec) close 2 action ON time : 1 ~ 999 minute(sec) close 2 action OFF time : 1 ~ 999 minute(sec)
Program setting		Control type selection : 1 action control/1action + 2 action control selection Input compensation : ±10.0 ℃ Hysteresis : 0.1 ~ 25.0 ℃ Output ON time unit selection : min/sec selection Output OFF time unit selection: min/sec selection
Output	Open	Contact composition : 1 a Contact × 2, 250 V AC, 5 A (resistive load)
	Close	

General specification

Power Supply Voltage	100 – 240 V AC 50 – 60 ㎐, 10 – 24 V DC/AC 50 – 60 ㎐
Voltage fluctuation	±10 % of the power supply voltage
Power consumption	5 VA max (220 V AC 60 ㎐)
Ambient temperature	0 ~ 50 ℃
Ambient humidity	35 ~ 85 % RH (without dew condensation)
Storage temperature	–25 ~ 65 ℃
Vibration resistance	10 – 55 ㎐, peak amplitude 0.76 ㎜ for 2 min each in 3 axis direction
Shock resistance	300 ㎧, 6 each in 6 axis direction, 3 times
Weight	116 g

Range and input code

Classification	Code	Input type	Range(℃)	Accuracy
HANYOUNG NUX exclusive sensor	D	TH–540D	–50.0 ~ 150.0	±1 % of FS ±1 Digit
	N	TH–540N	–40.0 ~ 90.0	

Dimension and panel cutout (Unit : ㎜)

● Dimension

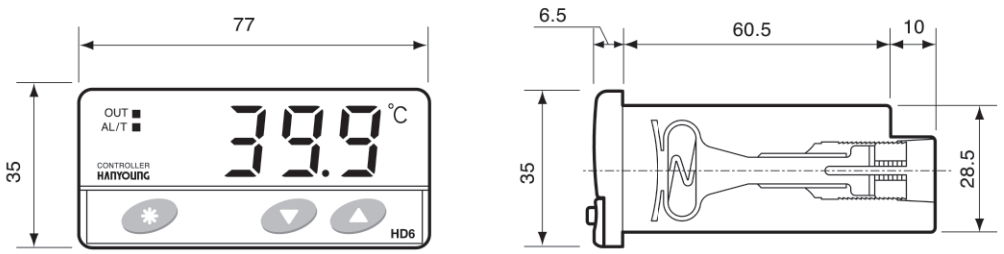

● Panel cutout

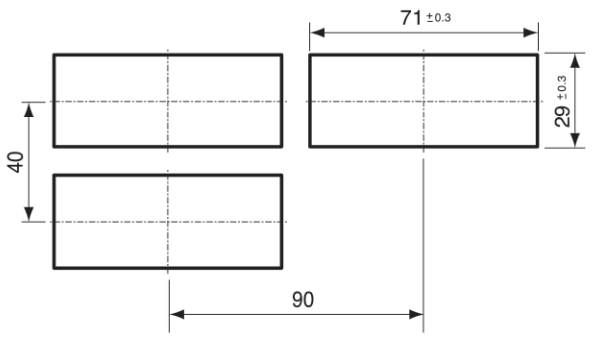

● Sensor (TH540D/TH540N)

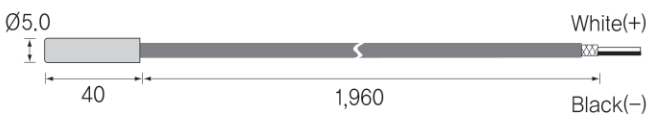

Connection diagram

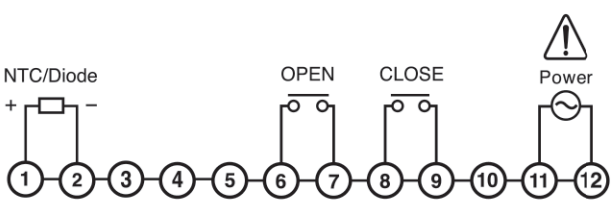

RS6

Digital temperature controller

- Cooling control, heating control selection
- Alarm output 2 contacts
- For ON/OFF control only
- 0.1C display
- Set the time of delay output

Suffix code

Model	Code	Description
RS6 –	□	Digital temperature controller
Input	K	K thermocouple
	P	RTD Pt100 Ω (IEC)
	N	HANYOUNG NUX exclusive NTC (TH746)

Specification

Input

Thermocouple input	K
RTD input	Pt100 Ω, NTC(HANYOUNG NUX exclusive)
Input sampling time	500 ㎳
Input display resolution	Select 0.1 ℃ indication (normally less than the min indication value)
Input impedance	Thermocouple (10 MΩ), RTD (200 KΩ)
Allowable signal source resistance	Thermocouple (250 Ω max). DC voltage(2 KΩ max)
Allowable wiring resistance	RTD (10 Ω max. but resistance among 3 wires should be same)
Input compensation	±9.9 ℃
Input signal break detection	When exceeding the max or min range, control output becomes OFF

Performance

Display accuracy	±1 % of FS ±1 Digit
Insulation resistance	20 MΩ min (500 V DC)
Dielectric strength	2000 V AC 50 / 60 Hz for 1 min, (between the different recharging part from each other)

Control function and output

Control type	Only for ON/OFF control
Control action	Reverse action (heating) or direct action (cooling) selection
ON/OFF control hysteresis	0.0 ~ 9.9 ℃
ON/OFF control output delay time	0 ~ 9 minute
Alarm type	High alarm, low alarm, hold high alarm, hold low alarm
Alarm setting range	Input range limit

● Output

Control output	Relay	Contact composition : 1 c contact. 250 V AC, 3 A (resistive load)
Alarm output	Relay (AL-1, AL-2)	Contact composition : 1 a contact. 250 V AC, 3 A (resistive load)

General specification

Power Supply Voltage	12 V AC 60 Hz
Voltage fluctuation	±10 % of the power supply voltage
Power consumption	5 VA max
Ambient temperature	0 ~ 50 ℃
Ambient humidity	35 ~ 85 % RH (without dew condensation)
Storage temperature	-25 ~ 65 ℃
Vibration	10 - 55 Hz, peak amplitude 0.76 ㎜ for 2 min each in 3 axis direction
Shock	300 ㎧, 6 each, 3 times

Range and input code chart

Classification	Code	Input type	Range(℃)	Accuracy
Thermocouple	K	K	-50.0 ~ 199.9	±1 % of FS ±1 Digit
RTD	P	Pt100	-199.9 ~ 199.9	
HANYOUNG NUX exclusive	N	NTC	-40.0 ~ 80.0	

Dimension and panel cutout (Unit : ㎜)

● Dimension

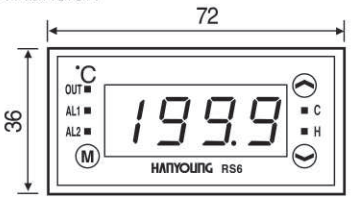

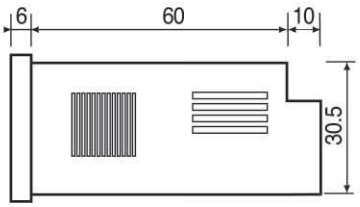

● Panel cutout

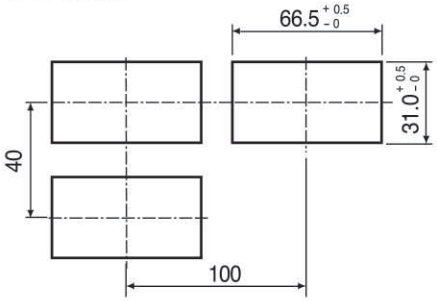

● Sensor (TH746)

Connection diagram

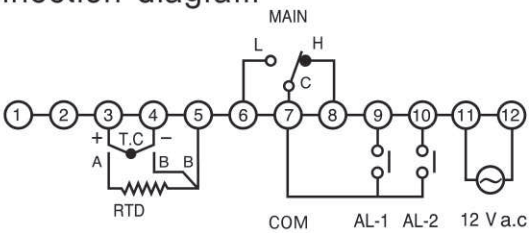

Accessory

● Power transformer

	Model	TR-6
	Capacity	3 VA
	Primary voltage	110 / 220 V AC (dual usage), 60 ㎐
	Secondary voltage	12 V AC

● Dimension (Unit : ㎜)

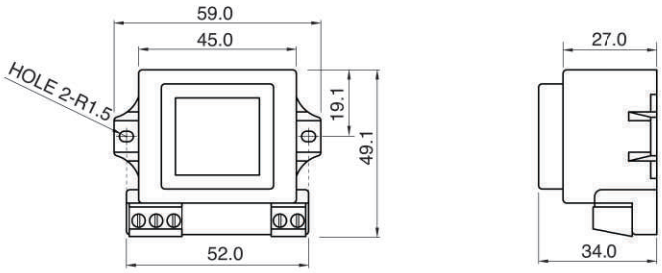

TP3

5 channel digital indicator

- Indicates 5 contacts temperature with 1 instrument
- Temperature deviation compensation function in each channel
- Channel fix/channel automatic switch selection
- Automatic switching time selection in each channel

Suffix code

Model	Code		Description
TP3-	□	□	5 channel indication thermometer 96(W) X 48(H)
Input	K		K thermocouple
	J		J thermocouple
	P		Resistance Temperature Detector(RTD) Pt 100 Ω (IEC)
Power supply voltage	P4		100 – 240 V AC 50 – 60 ㎐

Specification

Input

Input	by the suffix code (same input 5 contacts)
Thermocouple	K, J
RTD	Pt100 Ω(IEC)
Input sampling time	500 ㎳
Input display resolution	Usually less than 1 ℃
Input impedance	Thermocouple and DC voltage input (㎷) : 1 ㎆ min. DC rated voltage(V) : approx. 1 ㎆
Allowable signal source resistance	Thermocouple (250 Ω max). DC voltage (2 ㎏ max)
Allowable wiring resistance	RTD 10 Ω max (but resistances among 3 wires should be same)
Allowable input voltage	Within ±10 V (thermocouple, RTD, DC voltage(㎷)), within ±20 V (DC voltage(V))
Input compensation	Compensation by internal parameter
Cold junction compensation error	±2.0 ℃ (0 ~ 50 ℃)

Performance

Display accuracy	Thermocouple	±(0.5% of indicated value ±1 Digit) or ±3 ℃ (bigger one)
	RTD	±(0.5 % of indicated value ±1 Digit) or ±2 ℃ (bigger one)
Insulation resistance	20 ㎆ min(500 V DC)	
Dielectric strength	2000 V AC 50 / 60 ㎐ for 1 min (between the different recharging part) from each other	

General specification

Power Supply Voltage	100 – 240 V AC 50 – 60 ㎐
Voltage fluctuation	±10 % of power supply voltage
Power consumption	5 VA max
Ambient temperature	0 ~ 50 ℃
Ambient humidity	35 ~ 85% RH (without dew condensation)
Storage temperature	–25 ~ 65 ℃
Vibration resistance	10 – 55 ㎐, peak amplitude 0.76 ㎜ for 2 min each in 3 axis direction
Shock resistance	300 ㎧, to the 6 direction each 3 times
Weight	400 g

Range and input code chart

Classification	Code	Input type	Range(℃)	Accuracy
Thermocouple	K	K	–50 ~ 1,200	±(0.5% of indicated value ±1 Digit) or ±3 ℃ (bigger one)
	J	J	–50 ~ 800	
RTD	P	Pt100 Ω	–100 ~ 400	±(0.5% of indicated value ±1 Digit) or ±2 ℃ (bigger one)

Dimension and panel cutout (Unit : ㎜)

● Dimension

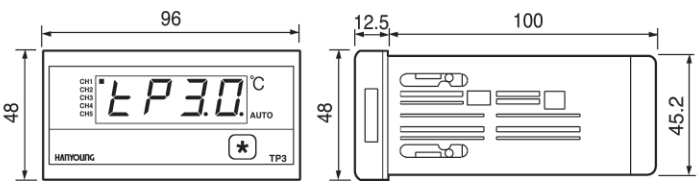

● Panel cutout

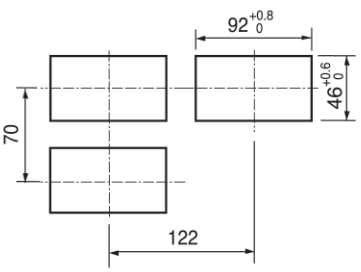

Connection diagram

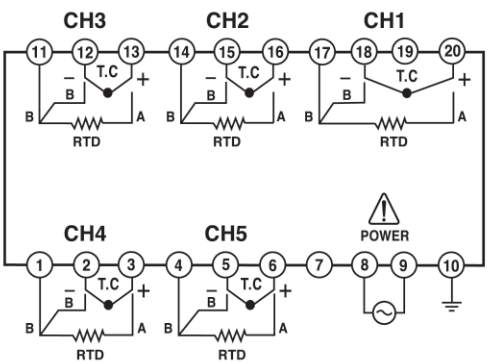

BK6-M

Multi input digital indicator

- Multi input (thermocouple, RTD, voltage/Current)
- Retransmission output (4 - 20 mA DC)
- Temperature unit selection
- Measured value compensating function

Suffix code

Model	Code	Description
B K 6 - M	□	Multi input digital indication thermometer 72(W) X 36(H) ㎜
Optional	0	None
	1	RET (Retransmission output 4 - 20 ㎃ DC)

Specification

Input

Input	Multi input (select by using the parameter)
Thermocouple	K, J, E, T, R, B, S, L, N, U, W, PL2
RTD	Pt100 Ω(IEC), KPt100 Ω
Input sampling time	500 ㎳
DC voltage	1 - 5 V (4 - 20 ㎷), -10 - 20 ㎷, 0 - 100 ㎷
Input impedance	Thermocouple and DC voltage input(㎷) : 1 ㎆ min. DC voltage input(V) : approx 1 ㎆
Allowable signal source resistance	Thermocouple (100 Ω max). DC voltage (2 ㎏ max)
Allowable wiring resistance	RTD 10 Ω max (but resistances among 3 wires should be same)
Allowable input voltage	Within ±10 V (thermocouple, RTD, DC voltage(㎷)). within ±20 V (DC voltage(V))
Input compensation	Compensation by internal parameter
Standard contact compensation error	±2.0 ℃ (0 ~ 50 ℃)

Performance

Display accuracy	Thermocouple	±0.5 % of FS ±1 Digit)
	RTD	±0.5 % of FS ±1 Digit)
	DC voltage, current	±0.5 % of FS ±1 Digit)
Insulation resistance	20 ㎆ min (500 V DC)	
Dielectric strength	2000 V AC 50 / 60 ㎐ for 1 min, (between the different recharging part from each other)	

※ Please refer to the range and input code chart for detailed display accuracy

General specification

Power Supply Voltage	100 – 240 V AC 50 – 60 ㎐
Voltage fluctuation	±10 % of power supply voltage
Power consumption	4 VA max
Ambient temperature	0 ~ 50 ℃ (without dew condensation)
Ambient humidity	35 ~ 85% RH
Storage temperature	–25 ~ 65 ℃ (without dew condensation)
Vibration resistance	10 – 55 ㎐ peak amplitude 0.76 ㎜ for 2 hours each in 3 axis direction
Shock resistance	300 ㎧ to the 6 direction each 3 times
Weight	120 g

Range and input code

Classification	Code	Input	Range (℃)	Accuracy
Thermocouple (TC)	1	K	–200 ~ 1,370 *2	±0.5 % of FS ± 1 digit
	2	K	–199.9 ~ 999.9 *2	
	3	J	–199.9 ~ 999.9 *2	
	4	E	–199.9 ~ 999.9 *2	
	5	T	–199.9 ~ 400.0 *2	
	6	R	0 ~ 1700 *2	
	7	B	0 ~ 1800 *1	
	8	S	0 ~ 1700	
	9	L	–199.9 ~ 900.0 *2	
	10	N	–200 ~ 1300	±1.0 % of FS ± 1 digit
	11	U	–199.9 ~ 400.0 *2	±0.5 % of FS ± 1 digit
	12	W	0 ~ 2300	
	13	PL2	0 ~ 1390	
RTD	20*	KPt100 Ω	–199.9 ~ 500.0 *3	±0.5 % of FS ± 1 digit
	21*	Pt100 Ω	–199.9 ~ 640.0 *3	
DC voltage	30	1 – 5 V	Scaling set (–1999 ~ 9999)	
	32	–10 – 20 ㎷		
	33	0 – 100 ㎷		
DC current	30*	4 – 20 ㎃		

*1 range 0 ~ 400 ℃ : ±10 % of FS ±1 Digit

*2 less than 0 ℃ : ±1.0 % of FS ±1 Digit

*3 –150.0 ~ 150.0 ℃ max : ±1.0 % of FS ±1 Digit

※ When using DC current input, please attach 0.1 % of 250 Ω resistance in between the input terminals after selecting the code number "30".

Dimension and panel cutout (Unit : ㎜)

● Dimension

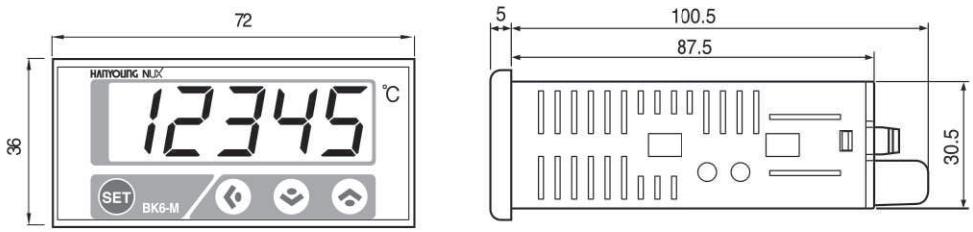

● Panel cutout

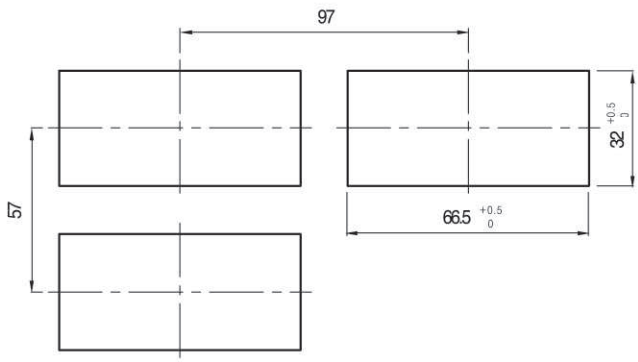

Connection diagram

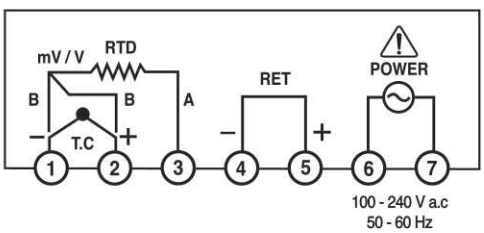

Parameter composition and initial setting value

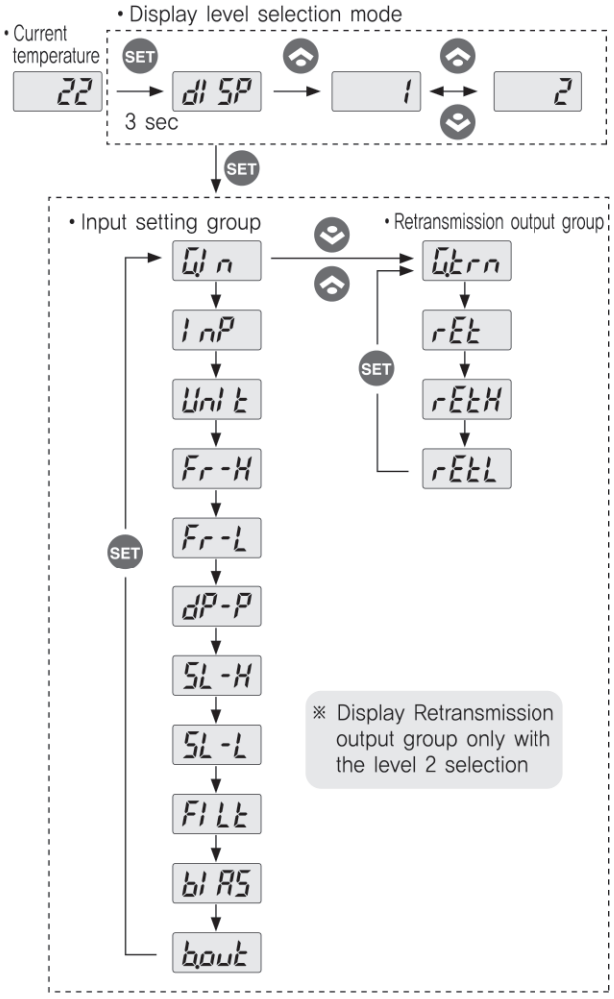

Meaning	Set information	Display condition	Default value
① Input group display	select the input types and set the mode that is related to the inputs.	–	–
② Input type selection	select the input signal and measurement range number (refer)	display at all times	selection number 1
③ Unit selection	℃ / ℉	thermocouple and RTD	℃
④ High range	Within the range limit (refer to the input types and range) FR-H 〉 FR-L	display at all times	1370
⑤ Low range			– 200
⑥ Position of decimal point selection (with voltage input)	DC voltage : 0 – 3 select the position with 0-3 setting	with voltage input (㎷, V)	1
⑦ High scale	–1 999 – 9 999 but SL-H 〉 SL-L position of decimal point is selected by DP-P	with voltage input (㎷, V)	100.0
⑧ Low range			0.0
⑨ Process value filter setting	Select the Process value filter	display at all times	OFF
⑩ Process value compensation setting	Measured value compensation setting	display at all times	EUS(0.0 %)
⑪ Burn-out	Burn-out	display at all times	ON

HN100

Digital indicator

- Large size LED display (font 34 x 56mm)
- IP57 water proof type
- Stainless external case
- Suitable for Sauna, sports center, vinyl house, green house and etc

Suffix code

Model	Code		Description
HN100–	□	□	Digital temperature indicator 275(W) X 170(H)
Input	1		Resistance Temperature Detector(RTD) Pt100 Ω(IEC)
	2		4 – 20 ㎃ DC (measurement range 0 ~ 100 ℃ fixed)
Measurement range		1	–100 ~ 400 ℃
		2	–19.9 ~ 99.9 ℃

Specification

Input

Input sensor	RTD : Pt100 Ω(IEC)
Input sampling time	500 ㎳
Input display resolution	Normally less than 1 ℃ of indication value .
Allowable wiring resistance	RTD (max 10 Ω, but resistances among 3 wires should be same)
Allowable input voltage	Within ±10 V (thermocouple, RTD, DC voltage(㎷)), within ±20 V (DC voltage(V)).

Function

Display accuracy	RTD	±(0.5 % of process value ±1 Digit) or ±2 ℃ (bigger one)
	4 – 20 ㎃ DC	
Insulation resistance	20 MΩ min (500 V DC)	
Dielectric strength	2,000 V AC 50/60 ㎐, for 1 min (between the different recharging part from each other)	

General specification

Power Supply Voltage	12 V DC (length of power line: standard 1.8m)
Voltage fluctuation	±10 % of power supply voltage
Power consumption	5 VA max
Ambient temperature	−10 ~ 70 ℃
Storage temperature	−25 ~ 80 ℃
Vibration resistance	10 − 55 ㎐, peak amplitude 0.76 mm for 2 min each in 3 axis direction
Shock resistance	300 ㎧, to the direction 6 each 3 times
Weight	1,900 g

Range and input sensor

Input sensor		Range(℃)
RTD	Pt100 Ω (IEC)	−100 ~ 400
		−19.9 ~ 99.9
DC current	4 − 20 ㎃ DC	0 ~ 100
Length of sensor	Standard 1.5 m	

Dimension and panel cutout (Unit : ㎜)

● Dimension

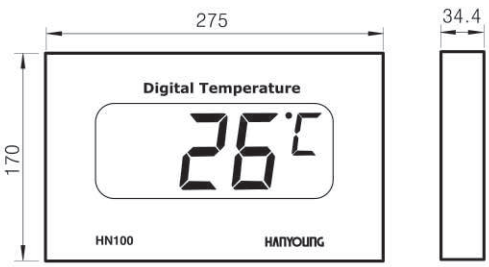

● Panel cutout

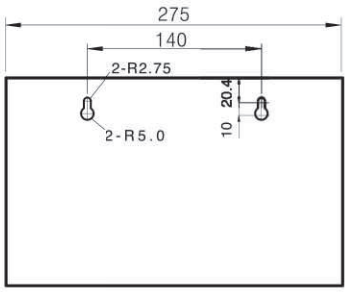

AT6

Digital indicator

- 0.5 % high accuracy indicator
- Simple exclusive indication
- Free voltage (100 – 240 V AC)
- Font height 11 ㎜, LED applied

Suffix code

Model	Code	Description
AT6 –	□	Digital temperature indicator 72(W) X 36(H) X 94.5(D) ㎜
Input	K	K thermocouple
	J	J thermocouple
	P1	Resistance Temperature Detector(RTD) Pt100 Ω(–199 ~ 600 ℃ Range)
	P2	Resistance Temperature Detector(RTD) Pt100 Ω(–199.9 ~ 199.9 ℃ Range)
	G	0 – 5 V DC
	V	1 – 5 V DC
	F	0 – 10 V DC
	C	4 – 20 ㎃ DC

Specification

Input

Thermocouple	K, J
RTD	Pt100 Ω (IEC)
DC voltage	0 – 5 V, 1 – 5 V, 0 – 10 V
DC current	4 – 20 ㎃ DC
Input sampling time	500 ㎳
Input display resolution	Usually less than indication value 1 ℃ (0.1 ℃)
Input impedance	1 MΩ (thermocouple and DC voltage)
Allowable signal source resistance	Thermocouple (100 Ω max), DC voltage (2 KΩ max)
Allowable wiring resistance	RTD (10 Ω max) but resistances among 3 wires should be same
Allowable input voltage	Within ±10 V (thermocouple, RTD, DC voltage)

Performance

Display accuracy	±0.5 % of FS
Insulation resistance	20 MΩ min (500 V DC)
Dielectric strength	2,000 V AC 50/60 Hz, for 1min, (between the different recharging part from each other)

General specification

Power Supply Voltage	100 – 240 V AC 50 – 60 Hz
Voltage fluctuation	±10 % of power supply voltage
Power consumption	5 VA max
Ambient temperature	0 ~ 50 ℃
Storage temperature	–25 ~ 65 ℃
Vibration resistance	10 – 50 Hz, peak amplitude for 2 h each in X, Y and Z direction
Shock resistance	300 m/s²
Weight	150 g

Range and input code chart

Classification	Code	Input	Range(℃)
Thermocouple	K	K thermocouple	0 ~ 1,200 ℃
	J	J thermocouple	0 ~ 600 ℃
RTD	P1	Pt100 Ω	–199 ~ 600 ℃
	P2		–199.9 ~ 199.9 ℃
DC voltage	G	0 – 5 V DC	0 ~ 100 ℃
	V	1 – 5 V DC	0 ~ 100 ℃
	F	0 – 10 V DC	0 ~ 100 ℃
DC current	C	4 – 20 mA DC	0 ~ 100 ℃

Dimension and panel cutout (Unit : mm)

● Dimension

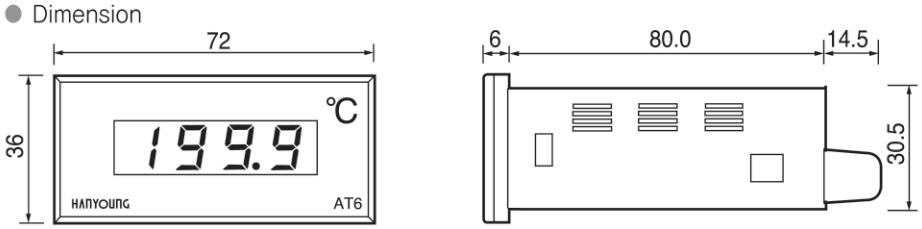

● Panel cutout

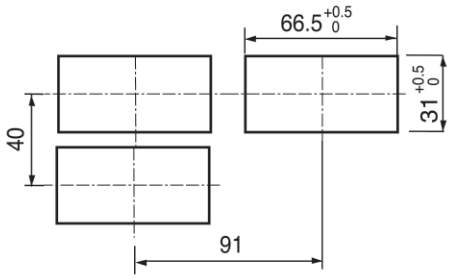

Connection diagram

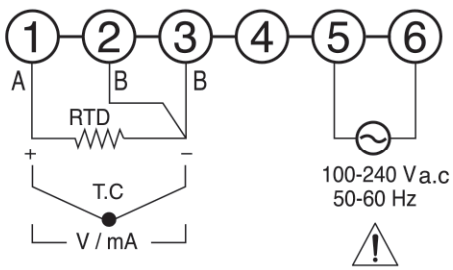

AT3

Digital indicator

- 0.5 % high accuracy indicator
- Simple exclusive indication
- Font height 14.2 ㎜, LED applied

Suffix code

Model	Code	Description	
AT3 -	□	Digital temperature indicator. 96(W) × 48(H) ㎜	
Input	KP	K thermocouple RTD Pt100 Ω	Select K or RTD by internal dip switch
	R	R thermocouple	

Specification

Input

Thermocouple	K, R
RTD	Pt100 Ω (IEC).
Input sampling time	500 ㎳
Input display resolution	Usually less than indication value 1 ℃ (0.1 ℃)
Input impedance	1 ㏁ (thermocouple and DC voltage)
Allowable signal source resistance	Thermocouple (100 Ω max)
Allowable wiring resistance	RTD (10 Ω max) but resistances among 3 wires should be same
Allowable input voltage	Within ±10 V (thermocouple, RTD, DC voltage)

Performance

Display accuracy	±0.5 % of FS
Insulation resistance	20 ㏁ min (500 V DC)
Dielectric strength	2,000 V AC 50/60 ㎐, for 1min, (between the different recharging part from each other)

General specification

Power Supply Voltage	110/220 V AC 50/60 ㎐ (Dual usage)
Voltage fluctuation	±10 % of power supply voltage
Power consumption	4 VA max.
Ambient temperature	0 ~ 50 ℃
Storage temperature	-25 ~ 65 ℃
Vibration resistance	10 - 50 ㎐, peak amplitude for 2 hrs each in X, Y and Z direction
Shock resistance	300 ㎧, direction to 6, each 3 times
Weight	Approx. 282 g

Range and input code chart

Classification	Code	Input	Range(℃)
Thermocouple	R	R	599 ~ 1699
	K	K (front panel deep switch)	0 ~ 1,300
			0.0 ~ 200.0
RTD	P	Pt100 Ω (front panel deep switch)	-199 ~ 600
			-199.9 ~ 199.9

Dimension and panel cutout (Unit : ㎜)

AT3

● Dimension

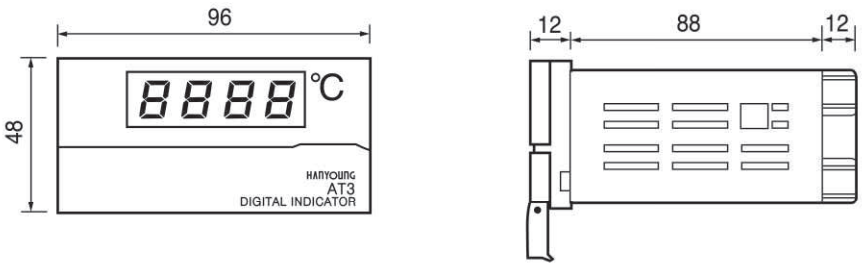

● Panel cutout

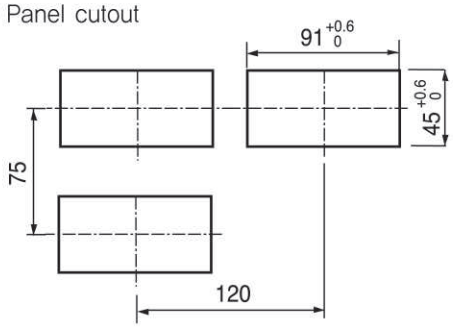

Connection diagram

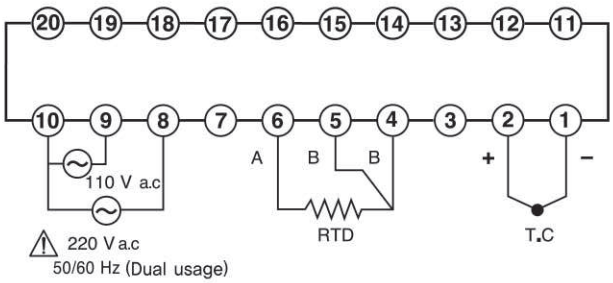

K/P mode selection

K(CA) ⟺ Pt100 Ω

※ K type : K thermocouple
P type : Pt100 Ω Resistance Temperature detector

BK3

Digital indicator

- 0.5 % high accuracy indicator
- Simple exclusive indication
- Power supply voltage 110/220V AC
- Font height, 14.2/20.0 ㎜ LED applied

Suffix code

Model	Code	Description
BK3-	□	Digital Temperature Indicator 96(W) X 48(H) ㎜
Input	K	K thermocouple (refer to the range and input code chart)
	K1	
	J	J thermocouple
	R	R thermocouple
	P1	Resistance Temperature Detector(RTD)
	P2	Pt100 Ω (refer to the range and input code chart)
	G	0 – 5 V DC
	V	1 – 5 V DC
	F	0 – 10 V DC
	C	4 – 20 V DC

Specification

Input

Thermocouple	K, J, R
Input sensor	RTD : Pt100 Ω(IEC)
DC voltage	0 – 5 V DC, 1 – 5 V DC, 0 – 10 V DC
DC current	4 – 20 ㎃ DC
Input sampling time	500 ㎳
Input display resolution	Usually less than indication value 1 ℃ (0.1 ℃)
Input impedance	1 ㏁ (thermocouple and DC voltage)
Allowable signal source resistance	Thermocouple (100 Ω max), DC voltage (2 ㏀ max)
Allowable wiring resistance	RTD (10 Ω max) but resistances among 3 wires should be same
Allowable input voltage	Within ±10 V DC (thermocouple, RTD, DC voltage)

Performance

Display accuracy	±0.5 % of FS ±1 Digit (but, if less than 599 ℃ with R input, warranty not applied)
Insulation resistance	20 MΩ min (500 V DC)
Dielectric strength	2,000 V AC 50/60 Hz, for 1 min, (between the different recharging part)

General specification

Power Supply Voltage	110/220 V AC 50/60 Hz (Dual usage)
Voltage fluctuation	±10 % of power supply voltage
Power consumption	4 VA max
Ambient temperature	0 ~ 50 ℃
Storage temperature	-25 ~ 65 ℃
Vibration resistance	10 - 50 Hz, Peak amplitude for 2 hrs each in X, Y and Z direction
Shock resistance	300 m/s² each in X, Y and Z direction for 3 times
Weight	350 g

Range and input code chart

Classification	Code	Input	Range(℃)
Thermocouple	K	K Thermocouple	0 ~ 1,300 ℃
	K1		0.0 ~ 200.0
	J	J Thermocouple	0 ~ 400
	R	R Thermocouple	599 ~ 1,699
RTD	P1	Pt100 Ω	-199 ~ 600 ℃
	P2		-199.9 ~ 199.9 ℃
DC voltage	G	0 - 5 V DC	0 ~ 100
	V	1 - 5 V DC	
	F	0 - 10 V DC	
DC current	C	4 - 20 mA DC	

Dimension and panel cutout (Unit : ㎜)

BK3

● Dimension

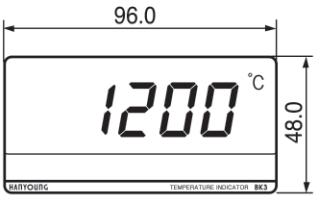

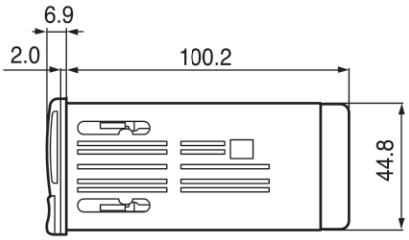

● Panel cutout

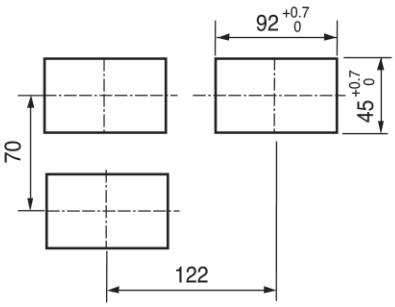

Connection diagram

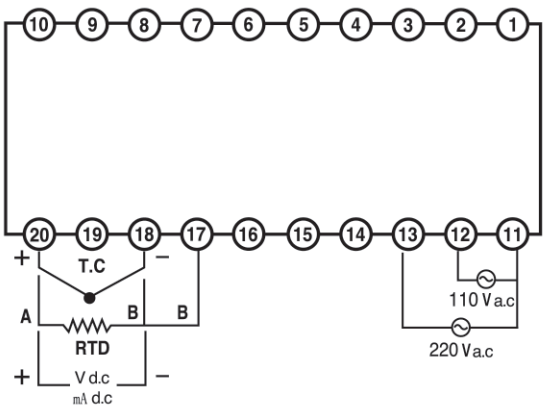

HY-4500S/4700S/5000

Analog indication temperature controller

- Proportional control or ON/OFF control
- Simple temperature setting
- Built-in auxiliary output (HY-4700)
- Plug in type
  (convenient repairing, inspecting and exchanging)
- Burn out function (output OFF with sensor break)
- Control action does not get influenced even with the break down of indicator

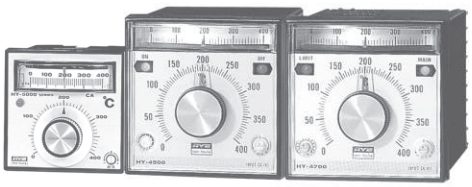

Suffix code

Model		Code						Description
HY-	□	□	□	□	□	□	□	Analog indication temperature controller
Dimension	4500S							96(W) X 96(H)
	4700S							96(W) X 96(H) (auxiliary output: L.M)
	5000							72(W) X 72(H)
Control type		F						ON/OFF control (2 position control)
		P						Proportional control
Input			K					K thermocouple
			J					J thermocouple
			R					R thermocouple
			D					Resistance Temperature Detector(RTD) KPt100 Ω
			P					Resistance Temperature Detector(RTD) Pt100 Ω(IEC)
			V					1 - 5 V DC
			C					4 - 20 ㎃ DC
Control output				M				Relay
				C				Current output (4 - 20 ㎃ DC)
				S				SSR (12 V DC voltage pulse output)
Sub output(L.M) (apply only with the model HY-4700)					N			NONE
					O			Low action
					P			High action
					W			Low/High action
Control operation						R		Reverse action (heating control)
						D		Direct action (cooling control)
Range code								Select the standard range code

Specification

Input

Thermocouple	K, J, R
RTD	Pt100 Ω, K Pt100 Ω(139.6 Ω when temperature is 100 ℃)
DC voltage input	1 – 5 V DC, 4 – 20 ㎃ DC
Input impedance	Thermocouple and DC voltage input(V) : approx. 1 ㏁
Allowable signal source resistance	Thermocouple (100 Ω max). DC voltage(2 ㏀ max)
Allowable wiring resistance	RTD 10 Ω max. (but resistances among 3 wires should be same)
Allowable Input voltage	Within ±10 V (thermocouple, RTD, DC voltage)
Cold junction compensation error	±2.0 ℃ (0 ~ 50 ℃)

performance

Display accuracy	±2 % of FS ±1 Digit
Insulation resistance	20 ㏁ min (500 V DC)
Dielectric strength	2,000 V AC. 50/60 ㎐, for 1min, (between the different recharging part from each other)

Control function and output

Control type	Proportional control, ON/OFF control (selected by the composition of suffix code)
Control action	Reverse action or direct action (selected by composition of suffix code)
Range setting	Same as the input range chart
Proportional band	1 ~ 10 % of FS (HY-4500 variable) (Model HY-4700, and HY-5000 are fixed with 3 % of FS)
Manual reset (M.R)	±10 % of M.V(amount of output)
Proportional cycle	Approx. 25 ~ 30 sec(relay output), approx. 2 ~ 4 sec(SSR output)
Hysteresis	Fixed to approx. 2 % of FS, (ON/OFF control)
Input signal break detection	When exceeding 10 ℃ from the range limit, output becomes OFF.
Auxiliary output (L.M)	Only with the Model HY-4700. High, low, high/low action (refer to suffix code)
Auxiliary output setting range	approx. 50 ℃ regarding the main setting (400 ℃ range standard)
Auxiliary output hysteresis	1 ℃ fixed

● Output

Control output	Relay output	Contact : 1 c, 250 V AC. 3 A (resistive load)
	SSR	Approx. 12 V DC (resistive load min 800 Ω)
	Current	4 – 20 ㎃ DC(resistive load max 600 Ω)
Sub output(L.M)	Relay	Only with Model HY-4700. contact : 1 c, 250 V AC 3 A (resistive load)

General specification

Power Supply Voltage	110/220 V AC 50/60 ㎐
Voltage fluctuation	±10 % of power supply voltage
Power consumption	3 VA max
Ambient temperature	0 – 50 ℃
Ambient humidity	35 ~ 85 % RH (without dew condensation)
Storage temperature	-25 ~ 65 ℃
Vibration resistance	10 – 55 ㎐, peak amplitude 0.76 ㎜, for 1 hr each in 3 axis direction
Shock resistance	300 ㎧, direction to 6 each 3 times
Weight	HY-5000 : 450 g, HY-4500S : 600 g, HY-4700S : 800 g

Range and input code chart

Code	HY-4500S, HY-4700S		HY-5000	
	Input	Range(℃)	Input	Range(℃)
1	Pt100 Ω	-50 ~ 50	Pt100 Ω	-50 ~ 50
3	Pt100 Ω	-50 ~ 100	Pt100 Ω	-0 ~ 100
5	Pt100 Ω	0 ~ 100	K, Pt100 Ω	0 ~ 200
6	–	–	K, Pt100 Ω	0 ~ 300
7	K, Pt100 Ω	0 ~ 200	K, Pt100 Ω	0 ~ 400
8	K, Pt100 Ω	0 ~ 300	K	0 ~ 600
9	K, J, Pt100 Ω	0 ~ 400	K	0 ~ 800
10	K	0 ~ 600	K	0 ~ 1200
11	K	0 ~ 800	–	–
13	K	0 ~ 1200	–	–
14	R	0 ~ 1600	–	–

Dimension and panel cutout (Unit : ㎜)

HY-4500S, 4700S

● Dimension

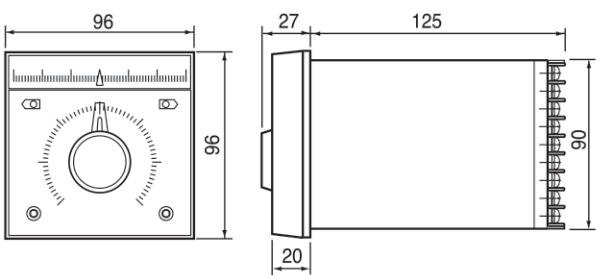

● Panel cutout

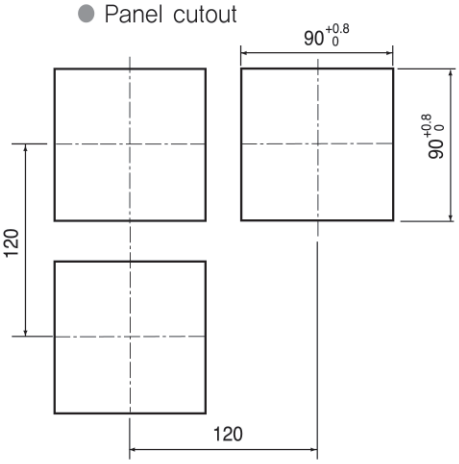

HY-5000

● Dimension

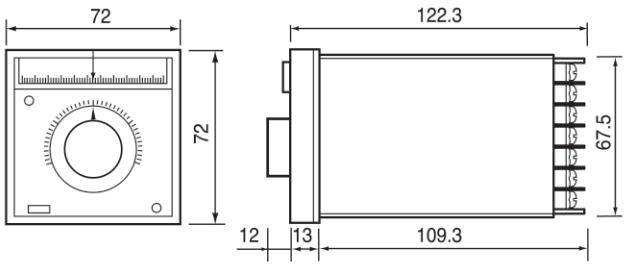

● Panel cutout

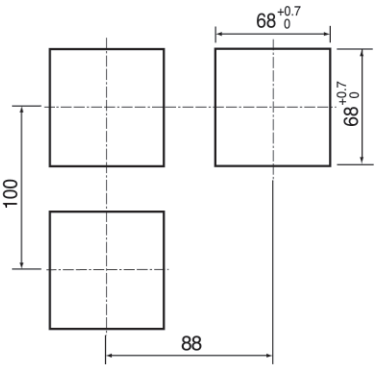

Connection diagram

HY-4500S

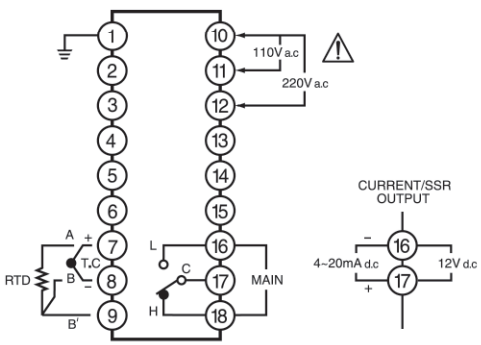

HY-4700S

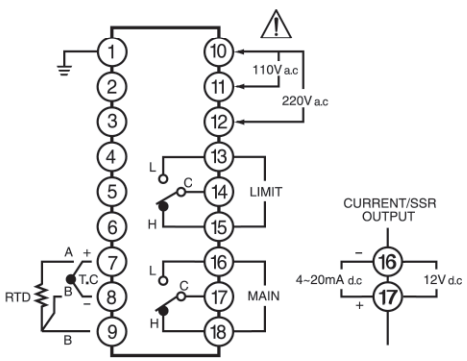

HY-5000

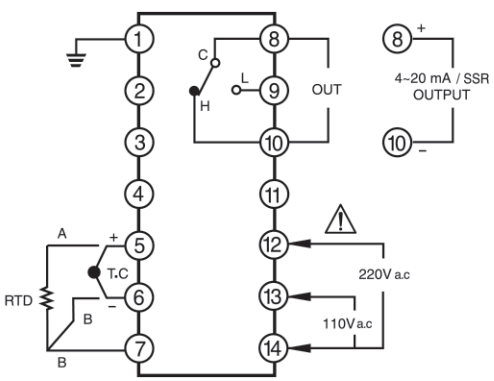

HY-3000 / AF1

Deviation indicating temperature controller

- Proportional control or ON/OFF control
- Simple temperature setting
- Burn out function
  (output OFF with sensor break)
- Control action does not get influenced by the break down of indicator

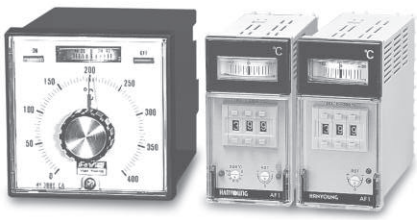

Suffix code

Model		Code						Description	
Dimension	HY-3000	□	□	□	□	□	□	96X96	Deviation indicating temperature controller
	AF1-							48X96	
Control type		F						ON/OFF control (2 position control)	
		P						Proportional control	
Input			K					K thermocouple	
			J					J thermocouple	
			P					Resistance Temperature Detector(RTD) Pt100 Ω(IEC)	
			V					1 – 5 V DC	
			C					4 – 20 ㎃ DC	
Control output				M				※ Relay	
				C				※ Current output (4 – 20 ㎃ DC)	
				S				SSR (12 V DC voltage pulse output)	
Sub output(SUB) (only with model AF1)					N			※ NONE	
					O			※ High action	
					P			Low action	
					W			※ High/Low action	
Control operation						R		※ Reverse action (heating control)	
						D		※ Direct action (cooling control)	
Range code								Select the standard range code	

※ Applied only to the AF1

Specification

Input

Thermocouple	K, J
RTD	Pt100 Ω, KPt100 Ω(139.6 Ω when temperature is 100 ℃)
DC voltage input	1 – 5 V DC 4 – 20 ㎃ DC (only with AF1)
Input impedance	Thermocouple and DC voltage input approx. 1 ㏁
Allowable signal source resistance	Thermocouple (100 Ω max). DC voltage (2 ㎏ max)
Allowable wiring resistance	RTD 10 Ω max. (but resistances among 3 wires should be same)
Allowable input voltage	Within ±10 V (thermocouple, RTD, DC voltage).
Cold junction compensation error	±2.0 ℃ (0 ~ 50 ℃)

Performance

Display accuracy	±2.5 % of FS (HY-3000), ±1.0 % of FS (AF1)
Insulation resistance	20 ㏁ min (500 V DC)
Dielectric strength	2,000 V AC 50/60 ㎐, for 1min, (between the different recharging part from each other)

Control function and output

Control type	Proportional control, ON/OFF control (selected by composition of suffix code)
Control action	Reverse action or direct action (selected by composition of suffix code)
Range setting	Same as the input range chart
Proportional band	HY-3000 : ±2.5 % of FS (Fixed), AF1 : ±3 % of FS (Fixed)
Manual reset(M.R)	±10 % of M.V (amount of output). only with Model AF1
Proportional cycle	Approx. 25 ~ 30 sec (relay output), approx. 2 ~ 4 sec (SSR output)
Hysteresis	Fixed to approx. 2 % of FS, (ON/OFF control, 400 ℃ standard)
Input signal break detection	When exceeding the range limit, output becomes OFF.
Sub output (SUB)	Only with Model AF1. High, low, high/low action (refer to suffix code)
Sub output setting range	Approx. 50 ℃ regarding main setting (400 ℃ range standard)
Sub output hysteresis	1 ℃ fixed

● Output

Control output	Relay output	Contact : 1 a, 1 b, 250 V AC. 3 A(resistive load) (HY-3000), 5A (AF1)
	SSR	Approx. 12 V DC (resistive load min 800 Ω)
	Current	4 – 20 ㎃ DC (resistive load max 600 Ω)
Sub output	Relay	Only with Model AF1. contact : 1a, 250 V AC. 3 A (resistive load)

General specification

Power Supply Voltage	110/220 V AC 60 ㎐
Voltage fluctuation	±10 % of the power supply voltage
Power consumption	3 VA max
Ambient temperature	0 ~ 50 ℃
Ambient humidity	35 ~ 85 % RH (without dew condensation)
Storage temperature	-25 ~ 65 ℃
Vibration resistance	10 - 55 ㎐, peak amplitude 0.76 ㎜, for 1hr each in 3 axis direction
Shock resistance	300 ㎧
Weight	400 g (HY-3000), 350 g (AF1)

Range and input code chart

Code	HY-3000		AF1	
	Input	Range(℃)	Input	Range(℃)
1	-	-	Pt100 Ω	-99 ~ 99
3	Pt100 Ω	-50 ~ 100	-	-
4	K, J, Pt100 Ω	0 ~ 100	Pt100 Ω	0 ~ 99
5	K, J, Pt100 Ω	0 ~ 200	K, Pt100 Ω	0 ~ 199
6	K, J, Pt100 Ω	0 ~ 300	K, Pt100 Ω	0 ~ 299
7	K, J, Pt100 Ω	0 ~ 400	K, Pt100 Ω	0 ~ 399
8	K	0 ~ 600	-	-
9	K	0 ~ 800	-	-
11	K	0 ~ 1200	-	-

Dimension and panel cutout (Unit : ㎜)

AF1

● Dimension

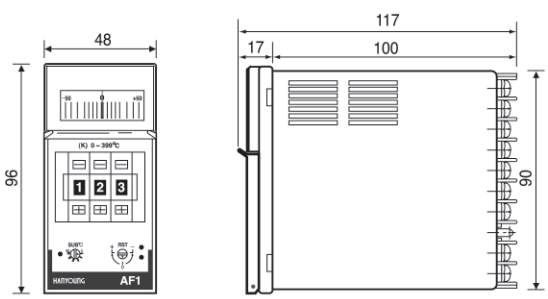

● Panel cutout

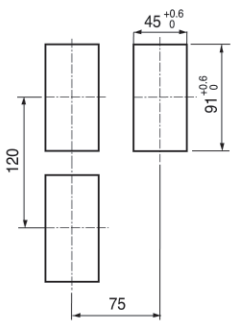

HY-3000

● Dimension

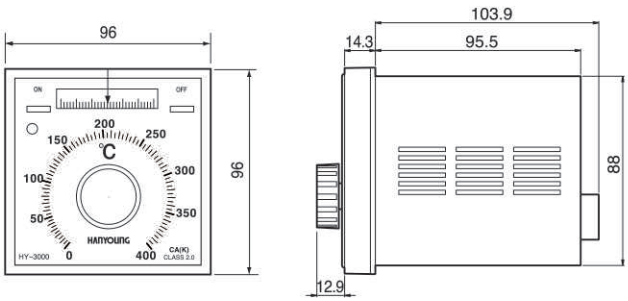

● Panel cutout

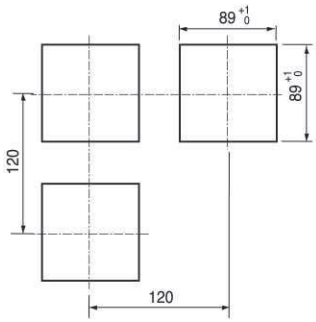

Connection diagram

AF1(built in alarm output)

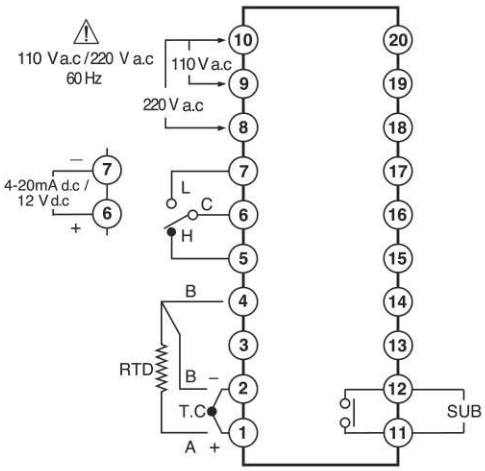

AF1

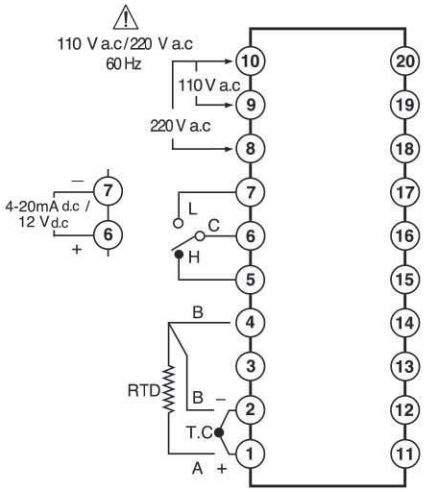

HY-3000

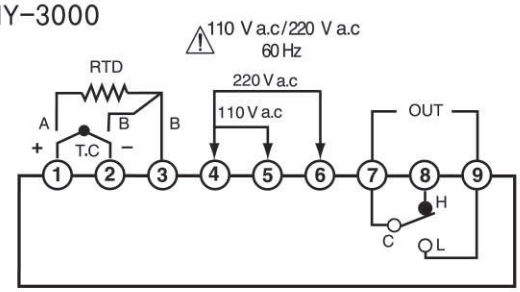

HY-1000/2000/ND4

Non-indicating temperature controller

- Proportional control or ON/OFF control
- Simple temperature setting
- Plug in type
  (convenient repairing, inspecting and exchanging)
- Burn out function (output OFF with sensor break)
- Strong durability from the vibration and shock so possible to install directly to the machine

Suffix code

Model	Code							Description
HY-1000	□	□	□	□	□	□	□	72(W) X 72(H) ㎜
HY-2000								96(W) X 96(H) ㎜
ND4								48(W) X 48(H) ㎜
Control type	F							ON/OFF control (2 position control)
	P							Proportional control
Input		K						K thermocouple
		J						J thermocouple
		P						Resistance Temperature Detector(RTD) Pt100 Ω(IEC751)
Control output			M					Relay
Alarm output				N				None (*.Model ND4 does not display)
Control action					R			Reverse action (heating control)
					D			Direct action (cooling control)
Range code								Select the standard range code
Terminal							T	ND4 terminal type

※ ND4 : Please select power voltage (110 V AC or 220 V AC)

Specification

Input

Thermocouple	K, J (J type only for HY-2000)
RTD	Pt100 Ω(IEC751)
Input impedance	Approx. 1 MΩ (thermocouple input)
Allowable signal source resistance	100 Ω max (thermocouple input)
Allowable wiring resistance	RTD 10 Ω max. (but resistances among 3 wires should be same)
Allowable input voltage	Within ±10 V (thermocouple, RTD, DC voltage)
Cold junction compensation error	±2.0 ℃ (0 ~ 50 ℃)

Control function and output

Control type	Proportional control, ON/OFF control (selected by the composition of suffix code)
Control action	Reverse action or direct action (selected by composition of suffix code)
Range setting	Same as the input range chart
Proportional band	3 % of FS (Fixed)
Proportional cycle	Approx. 25 ~ 30 sec (relay output), approx. 2 ~ 4 sec (SSR output)
Hysteresis	Fixed to approx. 2 % of FS, (ON/OFF control, 400 ℃ Standard)
Input signal break detection	When exceeding the range limit, output becomes OFF.
Control output	Relay (1 c, 250 V AC 3 A resistive load)

General specification

Power supply voltage	110 / 220 V AC 60 ㎐ (ND4 : 110 V AC or 220 V AC).
Voltage fluctuation	±10 % of power voltage
Power consumption	3 VA max
Insulation resistance	Min 20 ㏁ (500 V DC)
Dielectric strength	2,000 V AC 50/60 ㎐, for 1 min (between the different recharging part from each other)
Ambient temperature	0 ~ 50 ℃
Ambient humidity	35 ~ 85 % RH (without dew condensation)
Storage temperature	-25 ~ 65 ℃
Vibration resistance	10 - 55 ㎐, peak amplitude 0.76 ㎜, for 1hr each in 3 axis direction
Shock resistance	300 ㎧
Weight	HY-1000 : 400 g, HY-2000 : 400 g, ND4 : 200 g

Range and input code chart

Code	HY-2000		HY-1000		ND4	
	Input	Range(℃)	Input	Range(℃)	Input	Range(℃)
1	-	-	Pt100 Ω	-50 ~ 50	Pt100 Ω	-50 ~ 50
2	Pt100 Ω	-50 ~ 100	-	-	Pt100 Ω	-100 ~ 100
3	-	-	Pt100 Ω	0 ~ 100	Pt100 Ω	0 ~ 100
4	K, J, Pt100 Ω	0 ~ 100	-	-	-	-
5	K, J, Pt100 Ω	0 ~ 200	K, Pt100 Ω	0 ~ 200	K, Pt100 Ω	0 ~ 200
6	K, J, Pt100 Ω	0 ~ 300	K, Pt100 Ω	0 ~ 300	K, Pt100 Ω	0 ~ 300
7	K, J, Pt100 Ω	0 ~ 400	K, Pt100 Ω	0 ~ 400	K, Pt100 Ω	0 ~ 400
8	K	0 ~ 600	K	0 ~ 600	-	-
9	K	0 ~ 800	K	0 ~ 800	-	-
10	-	-	K	0 ~ 1200	-	-
11	K	0 ~ 1200	-	-	-	-

Dimension and panel cutout (Unit : ㎜)

HY-1000

● Dimension

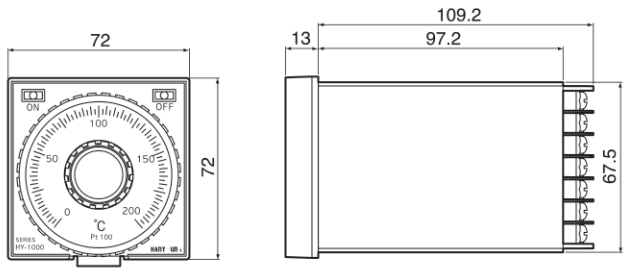

● Panel cutout

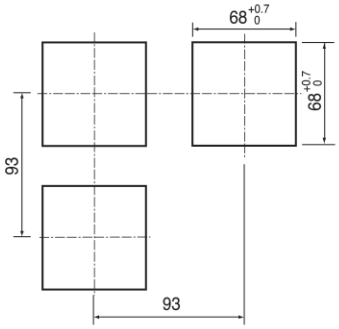

HY-2000

● Dimension

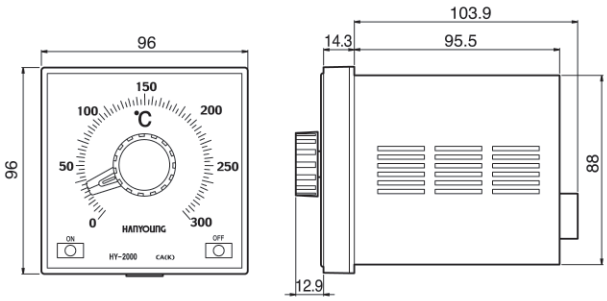

● Panel cutout

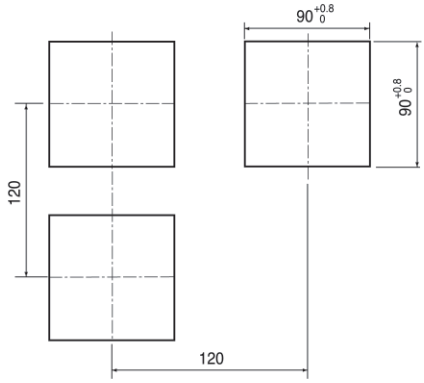

ND4 (Socket type)

● Dimension

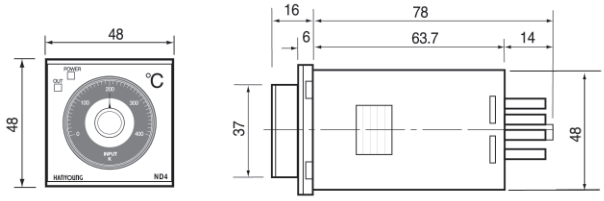

● Panel cutout

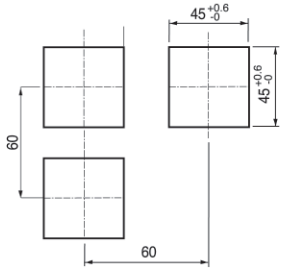

ND4 (Terminal type)

● Dimension

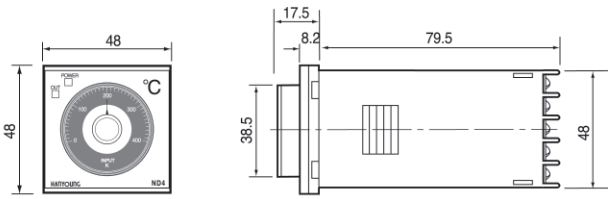

● Panel cutout

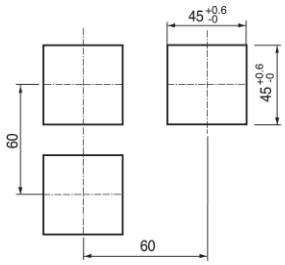

Connection diagram

HY-1000

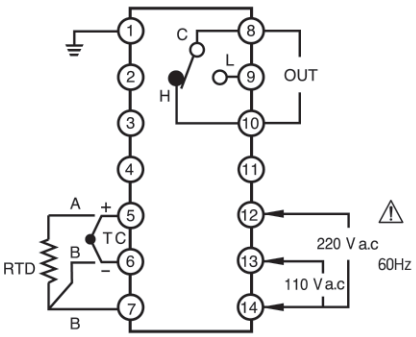

HY-2000

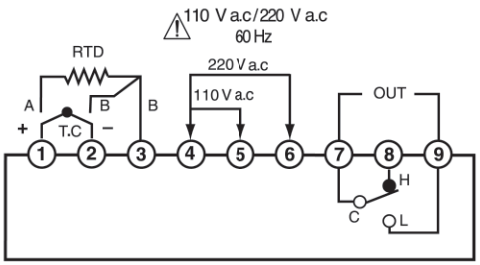

ND4 (Terminal type)

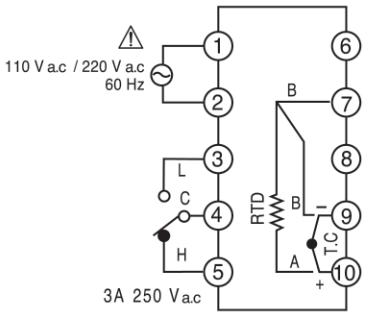

ND4 (Socket type)

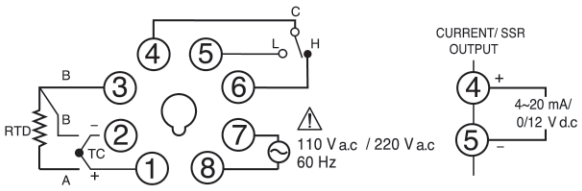

D55

Portable thermometer

- Temperature indication by large LCD
- Temperature unit selection
- Thermocouple selecting function (K, J)
- Indication value hold, max value/min value indication
- Display the individual temperature and temperature difference by using 2 contacts measurement input

Suffix code

Model	Description
D55	Portable indication thermometer

Specification

Input

Thermocouple	K, J		
Thermocouple spec	If purchased model D55, K type sensor is included (Model: TC-POP)		
Sensor type and measurement range	Input	K type thermocouple	J type thermocouple
	Resolving power	-100 ~ 1300 ℃	-50 ~ 760 ℃
		0.1 ℃, -50 ~ 1200 ℃ 1 ℃ (beyond the range of-50 ℃ ~ 1200 ℃)	0.1 ℃, -50 ~ 760 ℃ 1 ℃, -100 ~ -50 ℃
	Accuracy	±(0.1 % of indication value + 0.7 ℃)	±(0.1 % of indication value+ 0.8 ℃)

Function

Display	Display the temperature and function in the large LCD
Measurement of temperature display	Display the measured temperature value of thermocouple which is connected to the input
Temperature unit display	Select Celsius or Fahrenheit by using front key button
Hold mode	Display the measured temperature which is the value right before performing the hold function.
Max/min value selection	Display the max and min value alternatively by using the front panel key button
Battery replacing	Display the shortage of battery on the screen
Thermocouple selection	Display the type of thermocouple which has been set in the instrument
Auto selection	This instrument is 2 contact inputs which automatically display T1, T2 and T1-T2 temperatures in order by pressing "AUTO" button.
Individual temperature selection	Display each temperatures by selecting T1, T2 and T1-T2 button
Thermocouple breaks and exceeded temperature indication	Thermocouple OPEN or temperature range exceeded (------) indication.
Self diagnosis	Diagnosis itself by pressing the ON/OFF switch (thermocouple must be disconnected at this state)
Normal deviation adjustment	Press the "℃" button for more than 3 seconds and adjust the deviation by using HOLD or max/min button

General specification

Power	9 V battery (6F22, 006P).
Battery life	Approx 200 hours
Ambient temperature	0 ~ 50 ℃
Ambient humidity	0 ~ 90 %RH (without dew condensation).
Effect of electric field	During low frequency and high frequency of strong electric field, measurement of error may occur.
Storage temperature	-40 ~ 60 ℃
Weight	Approx. 216 g

Thermocouple

TC-PJP

TC-PIP

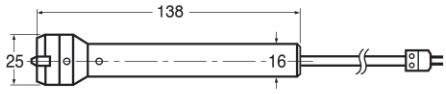

TC-PLP

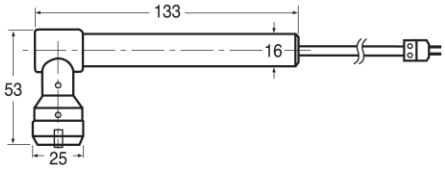

TC-POP

CV300

Communication converter

- Convert RS232 signal to RS422 / 485 signal
- RS422/485 Line Drive auto control
- RS232 and RS422 / 485 electrical insulation (2.5KV) and protective device built in
- Possible to set as various operation modes through the switch setting (2 wires, 4 wires, full duplex, half duplex, terminating resistance activation/deactivation)
- 1.5 km max, 256 node connections possible
- For the power state indication and data communication state displaying LED

Rating and function

Power	9 V, 300 mA DC Adapter (1.3 Ø DC Jack)
Communication speed	2400 ~ 115200 bps
Communication distance	1.5km max and possible to connect max 256 devices
Safety	1/2 circuit insulation, built in the surge protective device, automatically forms ± 15 KV ESD Protection Line Drive signal
Function setting	2 wires/4 wires, usage of the built in terminating resistance, full duplex/half duplex setting Possible
Connection method	RS232 -> DB-9 Female (possible to connect directly to the serial port of PC), RS422/485 -> method of inserting communication wire to the 4 pin terminal block.
Switch setting	6 Pin Piano Type Dip-Switch
Case material	Made of plastic
Weight	Body : 60 g, Adapter 300 g
Dimension	52 x 90 x 20 ㎜

Name and function of each part

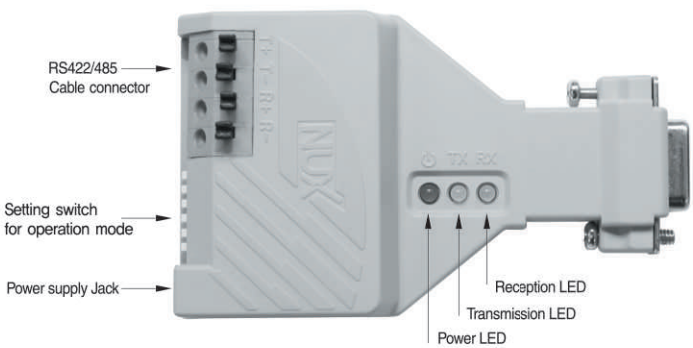

Function setting (DIP S/W)

1. ON → T+ and R+ internal connection (when communicating as 2 wire type)
2. ON → T− and R− internal connection (when communicating as 2 wire type)
3. ON → Enable the built in terminating resistance (when installing at the end of communication line (both side))
4. Empty terminal to keep the gap between 1/2 circuit insulation(No function)
5. ON → half duplex communication (2 wire or 4 wire half duplex)
   OFF → full duplex communication (4 wire point to point or multi drop master, 2 wire echo mode)
6. Delay time selection of Line Drive signal automatic creation (When transmitting the data, run the communication line for a certain period of fixed time with standardizing the start bit. Response Delay setting required at the opposite side of device in order to prevent the data crash when performing the 2 wire communication)
   ON → with high speed communication(19200 ~ 115200 bps), communication line run time is 0.6 msec/byte
   OFF → with low speed communication(2400 ~ 9600 bps), communication line run time is 5msec/byte

Dimension (Unit : ㎜)

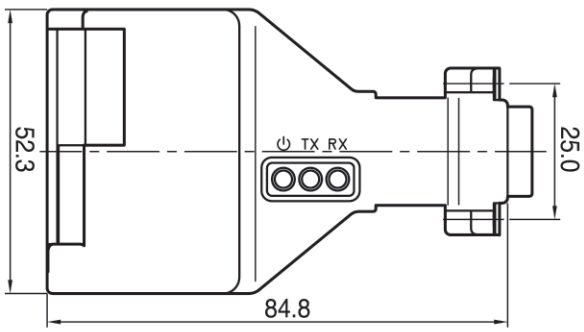

Connection diagram

■ 2 wires half duplex

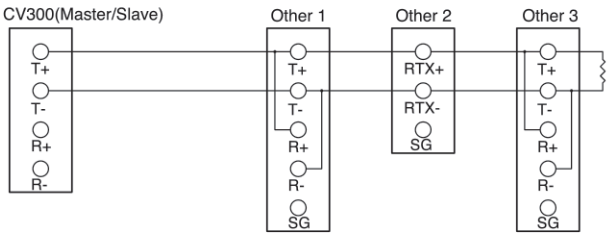

Dip S/W

1	2	3	4	5	6
ON	ON	ON/OFF		ON	ON/OFF

■ 2 wires full duplex (echo mode)

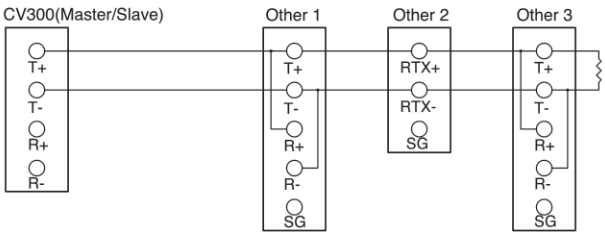

Dip S/W

1	2	3	4	5	6
ON	ON	ON/OFF		OFF	ON/OFF

■ 4 wires full duplex

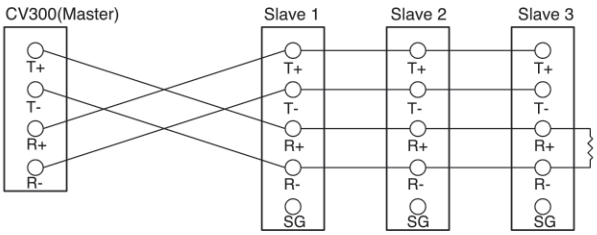

Dip S/W

1	2	3	4	5	6
OFF	OFF	ON/OFF		OFF	ON/OFF

■ 4 wires half duplex

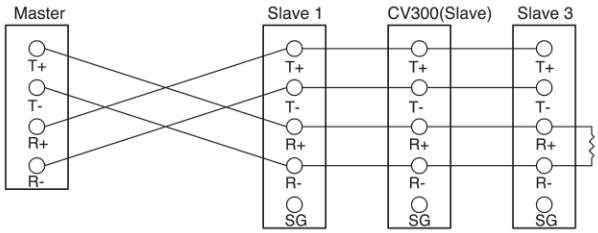

Dip S/W

1	2	3	4	5	6
OFF	OFF	ON/OFF		ON	ON/OFF

■ RS232 extending cable connection method

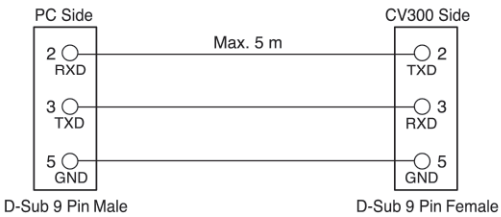

FS-3A

Floatless level switch

- Recommendable for water level control for irrigation, water purification
- Compact size and simple installation
- Operation state is indicated by the LED

Specification

Model	FS-3 A (High sensitivity)	FS-3 A (Low sensitivity)
Power Supply Voltage	110 V AC / 220 V AC 50/60 Hz	
Allowable voltage fluctuation range	± 10 % of the power supply voltage	
Voltage between the electrodes secondary voltage	24 V AC	8 V AC
Power consumption	Approx. 3.2 VA	
Response time	Max 80 ㎳ when operating, max 160 ㎳ when returning	
Operation resistance between electrodes	0 – approx. 27 KΩ	0 – approx. 7 KΩ
Return resistance between electrodes	Approx. 38 KΩ – ∞Ω	Approx. 15 KΩ – ∞Ω
Control output	Relay contact output (1c) : 250 V AC 5 A (Resistive load)	
Insulation resistance	100 MΩ min (measured with 500 V DC) between electricity conduction part and exposed non-charged metal part	
Dielectric strength	2000 V AC (50 – 60 Hz) for 1 minute between the two charged terminals	
Vibration resistance	10 – 55 Hz per 1 minute, with 0.76 mm amplitude, for 2 hours in each of X, Y and z directions	
Shock resistance	300 m/s^2	
Durability	Mechanically more than 5 million times (relay type), electrically more than 500 thousand times (load resistance)	
Ambient temperature	-10 ~ 50 ℃ (Under the condition of no ice formation)	
Ambient humidity	35 ~ 85 % RH	

Dimension (Unit : ㎜)

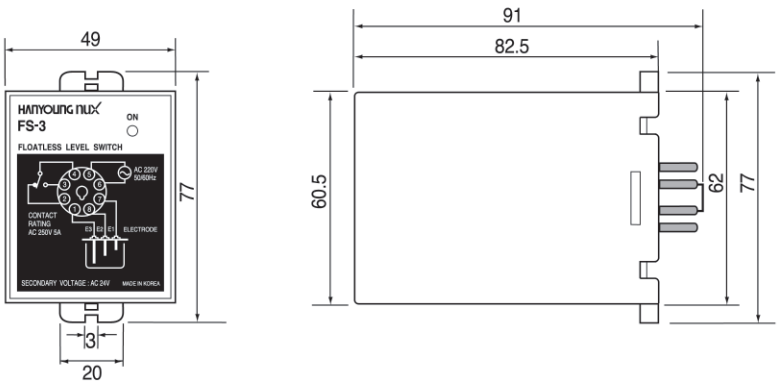

Connection diagram

■ External connection diagram

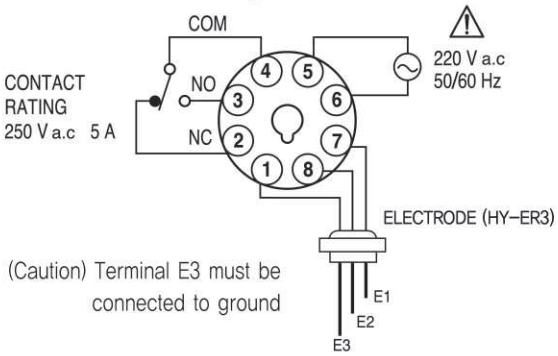

■ Internal connection diagram

① High sensitivity

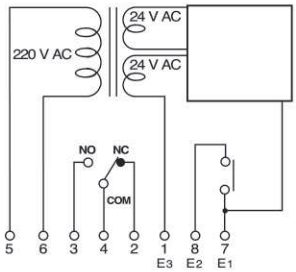

② Low sensitivity

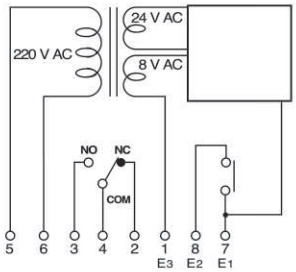

■ Regarding the connection of load

· Attaching the surge observer at each end of inducible load (motor, solenoid and etc) as shown on the right side will prevent noise

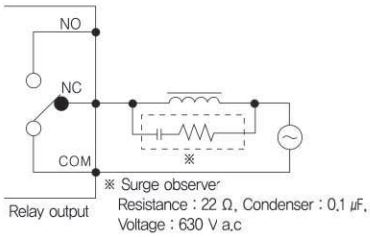

■ HY-ER3

Appearance	Dimension
	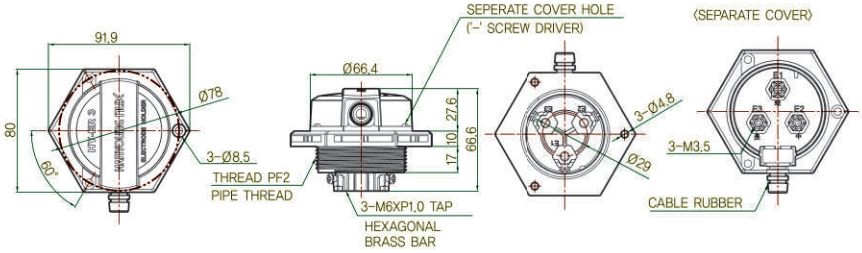

CV250

Dry/wet type temperature/humidity converter

- DIN rail and volt fixing installation type
- DC signal only
- Relative humidity operation by the dry temperature and wet temperature
- Simple system composition
- 2 wires type so simple transmission line
- Simple signal distribution (Low output resistance)
- Linear type signal

Suffix code

Model	Code	Description
CV250 -	□	Temperature/Humidity converter
Output signal	C	4 - 20 ㎃ DC
	V	1 - 5 V DC

Specification

Power Supply Voltage	100 - 240 V AC, 50/60 ㎐
Power consumption	Approx. 3 VA
Input signal	Resistance Temperature Detector(RTD) : Pt100 Ω (IEC751), dry/wet each 1 example ※Dry/Wet transmitter (Company model HY-PT230)
Measurement range	Temperature : 0 ~ 100 ℃, Humidity : 0 ~ 100 % RH
Accuracy	Temperature : ±0.5 %, Humidity : ±1 %
Output signal	Temperature/humidity yields 1 output individually (current by the suffix code/voltage output selectable) 4 - 20 ㎃ DC (resistive load max 600 Ω), 1 - 5 V DC (resistive load min 1 KΩ)
Output compensation	±5 % (Off-set compensation by the variable resistance)
Insulation resistance	Min 20 MΩ (500 V DC)
Dielectric strength	2500 V AC (power terminal-signal input/output terminal)
Ambient temperature	0 ~ 50 ℃
Ambient humidity	35 ~ 85 % RH (without dew condensation)
Storage temperature	-25 ~ 65 ℃
Vibration resistance	10 - 55 Hz, peak amplitude 0.76 ㎜, for 1 min each in 3 axis direction
Shock resistance	300 ㎧, 6 directions each 3 times
Weight	Approx. 300 g

Dimension & Panel cutput (unit: mm)

■ Dimension

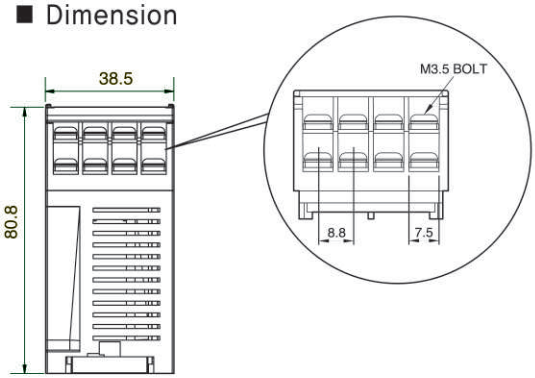

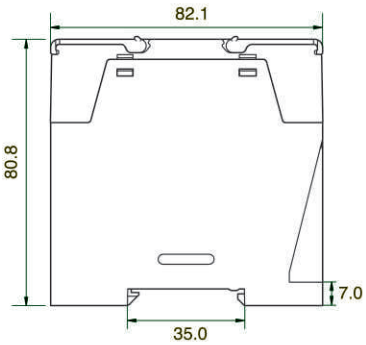

※35 mm DIN rail

■ Panel cutput

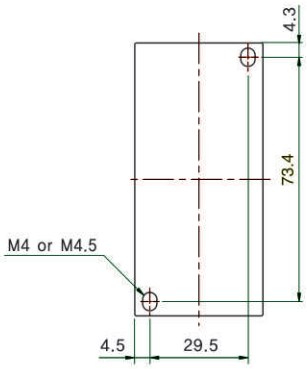

Connection diagram

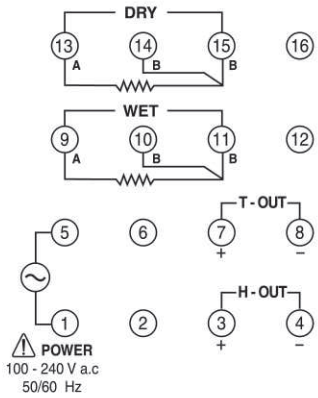

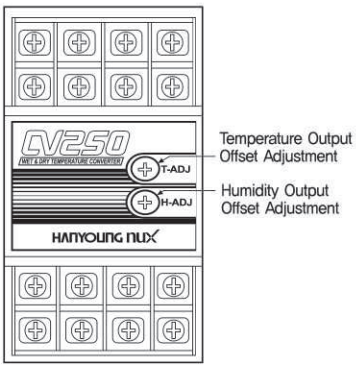

EM310

Data storage device

- 32Mbyte data storage device
- Simple panel installation type (72 x 36 mm)
- Memory stick USB port

Summary

• Use RS232C communication type to connect the body (TH500, TD500) and EM310 (Data storage device). After that, users can save the data into the memory stick in real time. Also, users can save the data into the internal non-volatile memory after circulating the data without USB memory stick

Specification

Model	EM310
Power voltage	24 V DC, 500 ㎃
Communication type	Asynchronous type serial communication (RS232C)
Communication speed	Max 38400 bps
Communication distance	Max 5 m
Setting type	Set by front switch
Saving media	USB MEMORY STICK
File system	Support FAT16, 32
Internal memory	32 Mbyte (non-volatile)

Name of each parts

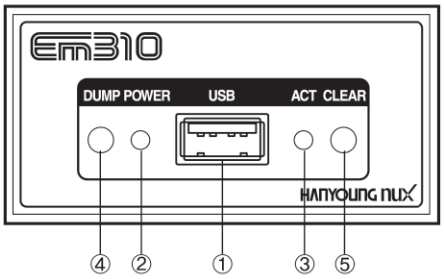

NO.	Name	Description
①	USB	Connect the USB stick here
②	POWER	Power indicating RED LED (Flickers when records the internal memory)
③	ACT	Data recording status indicator GREED LED (Flickers when records the USB memory stick)
④	DUMP	Copy button (Pressing DUMP button for 3 sec will copy the data inside the internal memory into the USB memory stick)
⑤	CLEAR	Internal memory Delete button (Pressing CLEAR button for 3 sec will delete the data inside the internal memory)

Dimension and panel cutout (unit: mm)

- dimension

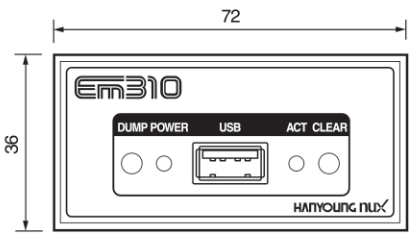

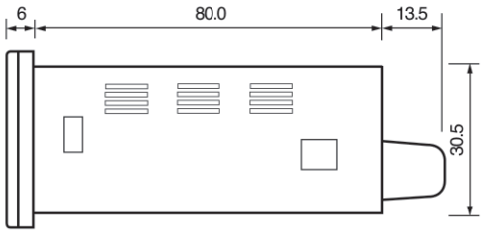

- panel cutout

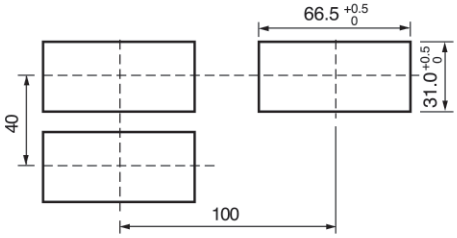

Connection diagram

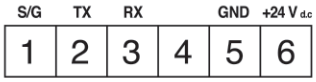

- Example of connection (Connection between TH500 and EM310)

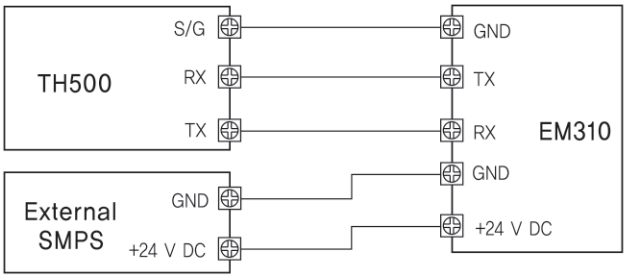

Technical Explanation

What is temperature control?

Temperature control means the activity of operating the temperature of the subject material to reach desired level. The method of control is divided into Feed back and Sequence. Sequence control means the way to carry out each stage of control in sequence in accordance with pre-determined order, which is applicable to the control of time, quantity, existence, etc. On the contrary, Feed back control means the way to detect the result of control and then carry out corrective action after comparing the process value with the targeted value, which is mainly applicable to the control of pressure, flow, temperature, etc.

What is Ideal temperature control?

The result of change in temperature obtained from the control of the subject material is called "Result of Control" Ideal temperature control is how close one makes the result of control to ideal response related with the change (change in set value, initial action when power is input) in set value (target temperature). As shown in (Fig. a), ideal response against the change in the step of set value (target temperature) will be the control shown in (Fig. b)

But, in reality, there exists time delay in the subject material of control, detecting element, operating element, etc., and therefore the controlling element conducts corrective action against the feedback signal (controlled temperature) that returned due to such delay. For this reason, the result of control causes either over shoot or cycling as shown in (Fig. c).

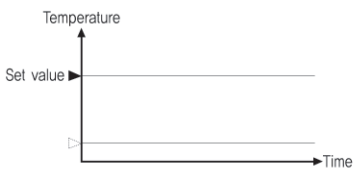

(Fig. a)

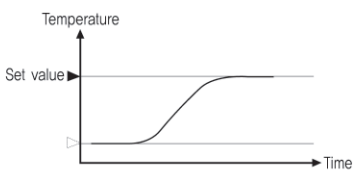

(Fig. b)

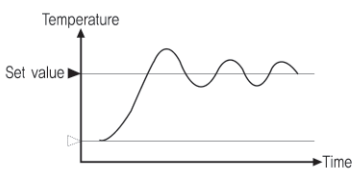

(Fig. c)

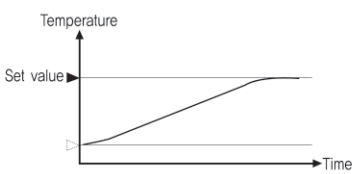

(Fig. d)

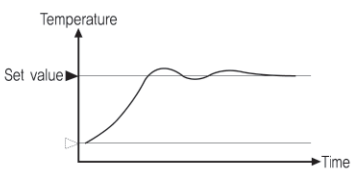

(Fig. e)

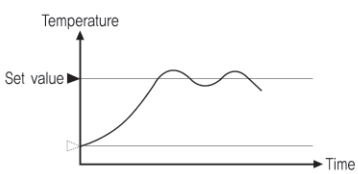

(Fig. f)

However, once control action is conducted slightly in excessive amount of gain (Kp), it badly affects the accessibility (time to reach target value) to set value (target value) as shown in (Fig. d). Besides, cycle may get larger instead of attenuation as shown in (Fig. f). For the question which would be the best response out of realistic control results (c), (d), (e) of (Fig. b), it depends on the purpose of control. In general, however, it is appropriate if the response is quick to some degree with rare vibration without "Normal deviation" (offset) like (Fig. e). To obtain good control result, it is necessary to select proper control action with thorough knowledge of dynamic characteristics of subject material or the elements constituting the controlling system such as detecting element, operating element, etc.

Considerations for Temperature Control

(1) No Over-shoot, No Hunting.

The phenomenon that actual temperature exceeds set value (target temperature) is called Over-shoot. In the mean time, the phenomenon that actual temperature varies up and down constantly against set value is called Hunting.

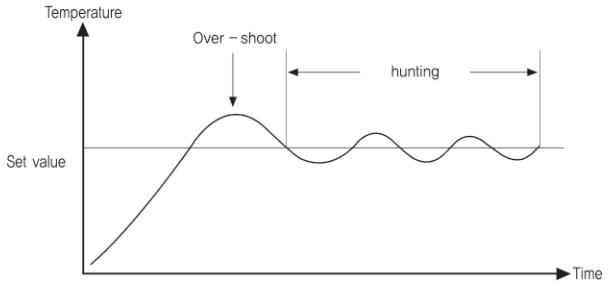

(2) Desirable Response and Stability.

When temperature immediately follows set value upon variation of set value, it is called desirable response. In the meantime, when there occurs any change in actual temperature due to disturbance, etc. which is, then, returned to normal state with subsequent transient state (hunting) removed quickly, it is called desirable stability.

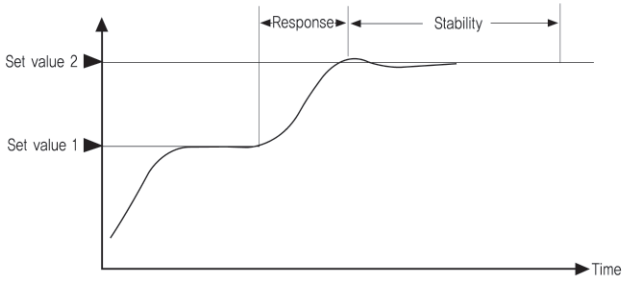

(3) No normal deviation (Offset).

The difference between actual temperature and set value under normal state is called "Normal deviation" or Offset.

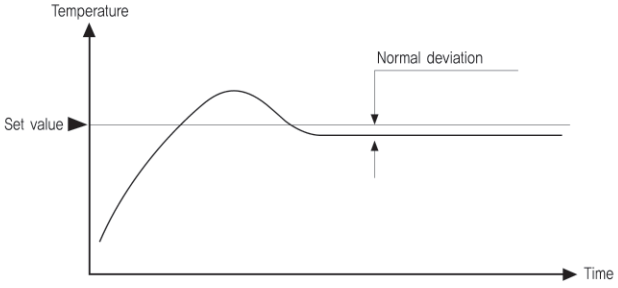

(4) Transient State and Normal State.

The period of initial transient state where actual temperature varies due to the influence of disturbance or change in set value, etc. is called transient state. As this transient state is over, the value becomes stable at a certain value, which is called "Normal state". However there are so many contradictions in general so eliminating all of them are just impossible in reality. Moreover, controlling each of information within Tolerable range regarding corresponding controller is normal in reality.
range in the relevant controller.

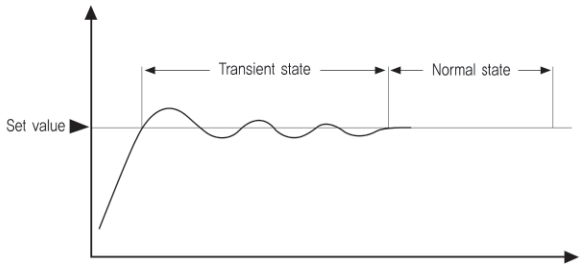

Characteristic of Subject Material of Control (Response)

To have good result of control, it is necessary to be well aware of disturbance or temperature characteristic of the subject material of control, and then conduct temperature control suitable for the subject material.

- Dynamic characteristic : Static characteristic: Relation between input and output under a stable state with a certain value. (Elemental characteristic in normal state)
- Static characteristic : Relation between input and output under a stable state with a certain value. (Elemental characteristic in normal state)
- Secondary delay element : The appearance of response from the subject material of control, that is, the appearance of response in S-character form as initial rise is delayed
- Dead time element : The element such as the input signal being delayed in transmission for a certain period
- Thermal capacity : The subject material of heating control is divided into heater itself and the material heated by the heater. In this case, the maximum thermal force heated by the heater is "heater capacity" while the thermal magnitude of the subject material heated by the heater is "thermal capacity". In the Figure, the magnitude of volume heated is the thermal capacity of electric furnace. The time constant in case heater capacities are same and thermal capacity is larger (primary delay or secondary delay) is not high. For example, the delay of thermal response is divided.

In the case heater capacities are same and thermal capacities (magnitude) of electric furnace are different		In the case heater capacities are different and thermal capacities (magnitude) of electric furnace are same	
A	Small-size electric furnace	D	Small-capacity heater
B	Medium-electric furnace	E	Medium-capacity heater
C	Large-size electric furnace	F	Large-capacity heater

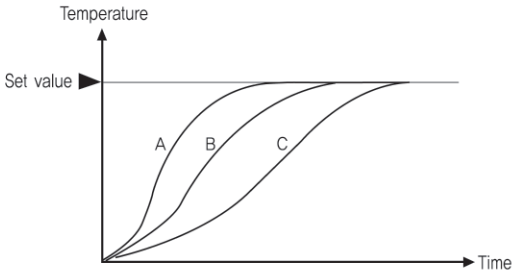

In the case of different thermal capacity

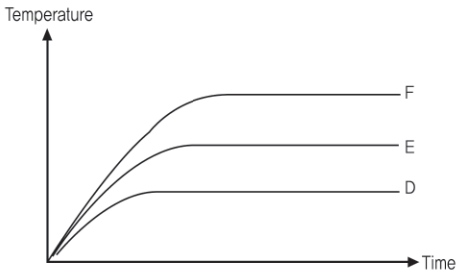

In the case of same heater capacity

● Disturbance: External action that changes temperature in stable state

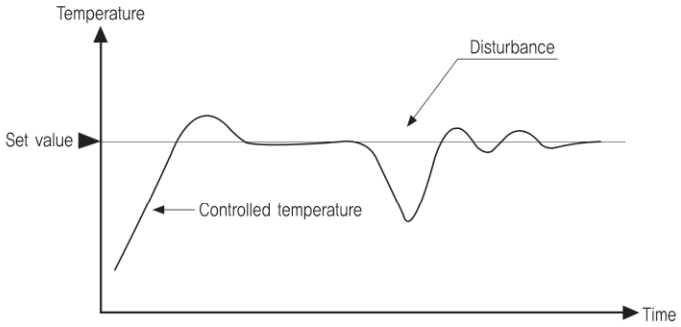

Kind of Temperature Control

Temperature control is broadly divided into two types.

Sequence Control

Control performed in predetermined order is called sequence control. In addition, it is called open loop control as the control on the whole consists of open circuit. Normally open loop is simpler and less expensive in its equipment than closed loop, and therefore open loop is popular where there is no disturbance.

Feedback control

Closed circuit can be constructed to make operations of measurement, comparison, judgment, manipulation, measurement. The operation of control in such a closed circuit is called closed loop control. It is also called feedback control as the controlled result is returned to the side of input.

- Classification by subject material of control
  ① Process control : Control in process type such as temperature, pressure, flow, etc.
  ② Servo control : Control that follows any arbitrary change in target value such as location, angle, etc.
- Classification by target value
  ① Fixed control : Control the target value of which is constant. This is mainly used for process control
  ② Program control : Control of change that is carried out with target value pre-determined

Construction of Temperature Control

General temperature control is comprised of feed back control as shown in the Figure.

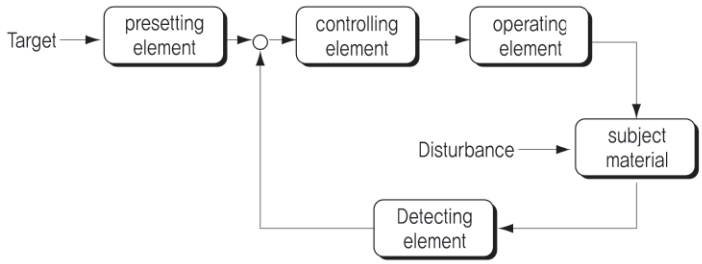

- Detecting element (Temperature sensor) : This is formed of the structure that protects the diode that converts temperature into electric signal with pipe tube. This diode is installed on the subject place requiring temperature detection for usage.
- Operating element (Magnet, Valve) : This is the device for cooling or heating electric furnace, etc. that includes electronic switch that intermits the current applied to heater, valve that conducts supply and suspension of fuel, etc.
- Presetting element, controlling element (Thermostat) : This is a device that sends adjusted signal to controller after receiving electric signal of detector and then comparing it with target (preset) temperature.
- Subject material (Electronic furnace, dryer, etc.) : Electronic furnace, dryer, etc.

Control operation

Controlling action means the detailed contents of controlling element out of temperature controlling gauges. Please select proper control operation after fully understanding the temperature characteristics of the subject material of control. Control system has always consumption time where temperature may not be immediately controlled at new target value. In general, the quick response results in over shoot and hunting, and therefore the response time is delayed when these are removed. There are On/Off Operation, Proportional Operation, PID Operation, Proactive integration PID. Operation, Proactive proportion PID Operation, etc. in principal temperature control.

How to tune PID constant

To acquire most appropriate PID control result, it is necessary to take each constant of proportional band, integral time, and derivative time in appropriate value. The recent thermostat has the function of automatically calculating each constant of these. There are step response and marginal sensitivity, etc. in the method of seeking each constant manually (tuning).

Step Response

The input that has "0" until a given time, but a certain value thereafter is called step input, and the response attributable to such step input is called step response or initial response.

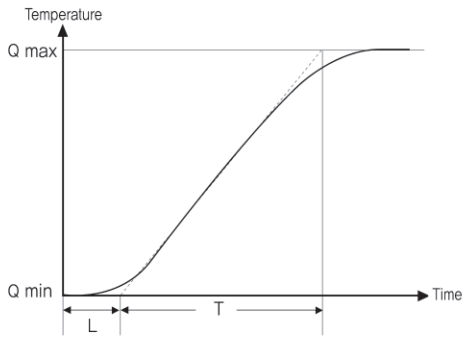

Give step MV to the subject material of control using control system. Then record the response with recording system, from which delay time L, time constant T, starting point Q min, end point Q max. Finally PID constant can be obtained.

Controlling Method	Proportion Coefficient	Integral time I	Derivative time D
P	$KpK = \frac{T}{L}$		
PI	$KpK = 0.9 \frac{T}{L}$	$I = 3.3\ L$	
PID	$KpK = 1.2 \frac{T}{L}$	$I = 2\ L$	$D = 0.5\ L$

Limited Sensitivity Method

Change P value in proportional band so as to have continuous vibration as shown in the Figure using proportional control only in the subject material of control. Then calculate PID constant using proportional band Pc and cycle Tc at this time.

P = 1.7*Pc

I = 0.5*Tc

D = 0.125*Tc

Example) Pc = 10℃, Tc = 540 sec.

P = 1.7*10 = 17 ℃

I = 0.5*540 = 270 sec.

D = 0.125*540 = 67.5 sec.

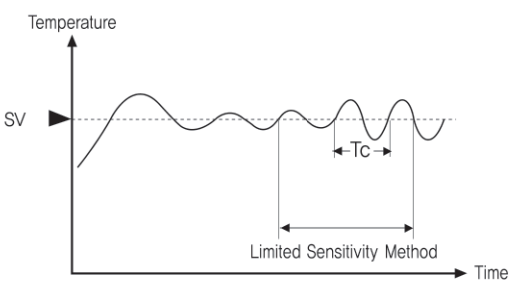

Glossary of terms

■ Input

Signal going into an electronic system such as sensor and etc.

■ Set

Different setting lists depending on the different types of temperature controller. Most basic setting is a setting value (target value) of control.

■ Thermocouple

Temperature sensor which is composed of two different metals. Each sensor is rated with KS (Korea industrial standard), IEC (international electric community) and etc.

■ Thermo electromotive force

The measurement principle of thermocouple which attaches 2 different kinds of metallic line and maintains those 2 contacts with different temperature. Here, electromotive force that is generated in the circuit is known as thermo electromotive force.

■ Compensation cable

Compensation cable is used to exceed the cold ends of the thermocouples in the temperature testing system and low temperature acid, corrosion, aging as well as oil and water. The thermocouple terminal is connected to the reference junction to compensate for error caused by the temperature of the thermocouple terminal section.

■ Resistance temperature detector

Temperature sensor which detects the variation of temperature by changing the electrical resistance.

■ Three wire type

Connect 2 wires at the end of resistance device of RTD and at the other end, connect 1 wire so when extending the lead wire, this method will eliminate the effect of leading wire resistance. HANYOUNG NUX uses the 3 wires type for the Input type of RTD thermometer.

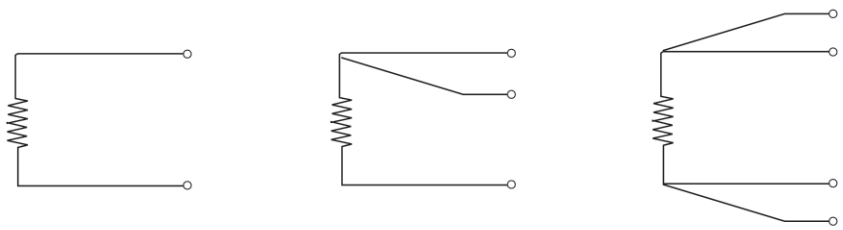

2 wires type　　3 wires type　　4 wires type

■ Process value bias function

Add or subtract an amount of set value from the actual measured value

Process value of temperature controller =actual measured value +set value of PV bias

■ Signal source resistance

Allowable leading wire when input is thermocouple or RTD. But in case of RTD input, it is referring to the resistance value per 1 leading wire and the resistance values among 3 wires must be same.

■ Full Scale

Range of the min/max value within the input range

Example) In case of −200~1300℃, it will become | −200 | +1300=1500℃

■ Cold junction compensation error

The thermo-electromotive force of the thermocouple is generated according to the temperature difference between the hot and cold junctions. If the cold junction temperature fluctuates, the measurement data will fluctuate even if the hot junction temperature remains stable. For this reason, a separate sensor built into the controller is used to monitor any changes in the cold junction (terminal connected to the thermocouple), and the controller automatically compensates for these changes to keep the cold end of the device at 0C. This is called cold junction compensation error.

■ Sampling time

The time between successive measurements of a physical quantity such as input signal and etc.

■ Accuracy

The ability of a measurement to match the actual value of the quantity being measured. Indication accuracy, measurement accuracy, setting accuracy and etc

(Without the accuracy indication, ambient temperature is approved within 23C+ −5)

■ Display Accuracy

The allowable range of error in the indicated value for an input from a sensor. For a thermocouple input, the indication accuracy includes the cold junction compensation accuracy.

■ Measuring Accuracy

Measuring accuracy is same as the display accuracy except this one excluded the cold junction compensation accuracy. Operating manual for the products with the thermocouple input will usually indicate either "cold junction compensation accuracy" or "cold junction compensation error" only when they are displayed with the "measuring accuracy."

■ Setting Accuracy

Setting accuracy is an allowable range regarding the actual value of setting value.

■ Cold junction compensation Accuracy

Terminal temperature measurement accuracy of the instrument which occurred only with the thermocouple input.

■ +1 Digit

The minimum resolving power of digital display.

■ Alarm function

Alarm starts to run when present value (PV) or deviation reaches the alarm setting value. Apply to operate the warning signal of device or safety device.

■ Deviation alarm

A type of alarm setting. The deviation alarm turns ON according to the deviation from the set value in the Temperature Controller. For example, when setting 5C for alarm setting value in the deviation alarm and when setting value of the temperature controller is set as 100C then alarm output will be operated with measurement temperature equal to or more than 105C or equal to or less than 95C. In other words, alarm output will be operated with [control temperature setting value + alarm setting value] of the temperature controller.

■ Process alarm

A Process alarm turns ON according to the alarm temperature regardless of the set value of the Temperature Controller. For example, when alarm setting value of the absolute alarm is set as 100C then alarm output will be operated only when the measurement temperature is equal to, more than or less than 100C.

■ Alarm with standby sequence

When power is ON and if the input value is within the alarm range, this function invalidates the alarm function until the value exceeds the alarm range. In other words, this function does not generate the output (alarm state) when supplying in the power so it is used with the low alarm and etc frequently.

■ Remote input

Set or change the temperature setting value externally by the signal of DC voltage or DC current.

■ Auto/Manual

Automatic operation is used to output the results of internal processing as the manipulated variable. Manual operation is used to output the manipulated variable that is manually input from front-panel keys.

■ Ramp function

Amount of changed (slope) target setting value regarding the initial setting value per unit time. In other words, when turning ON the power, it eliminates the thermal shock which is caused by the sudden temperature change due to the change of setting value per unit time.

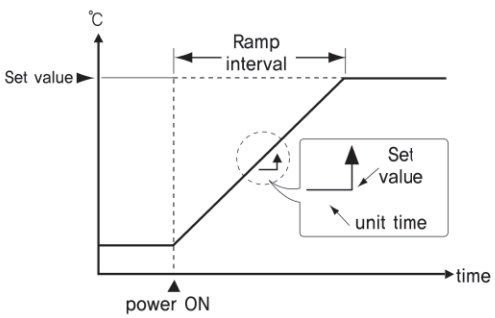

■ 히터 단선경보 기능 (H.B.A : Heater break alarm)

온도조절계에 있어서 전류검출기(C.T)를 사용하여 부하전류를 검출, 그 값이 제어출력이 ON 상태에서 "H.B.A"에 미리 설정되어 있는 전류값 이하가 되거나, 제어출력이 OFF 상태에서 전류 설정값 이상이 되면 H.B.A 출력이 ON 되는 경보출력을 말합니다.

※ 출력이 ON 되었을 때 전류 값이 낮으면 히터 단선으로 판단.

※ 출력이 OFF 되었을 때 전류 값이 높으면 조작기 용착으로 판단.

■ Loop Break Alarm

A function for outputting a loop break alarm when the process value does not change by a specified amount (LBA dead band) after the manipulated variable has reached the max or min value

■ Direct action

Operation in which the output value changes in direct proportion to the process value. For example, the output value becomes larger as the process value increases. Generally used for the cooling control

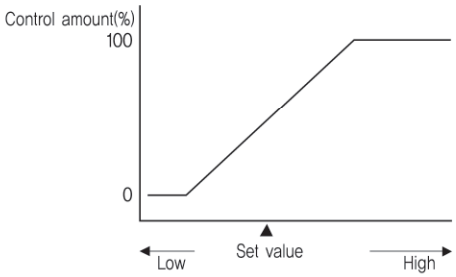

■ Reverse action

Operation in which the output value changes in a reverse proportion to the process value. For example, the output value becomes smaller as the process value increases. Generally used for the heating control.

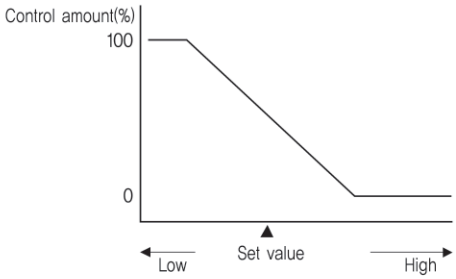

■ Heating and cooling control

When it is hard to control the controlling object only with the heating control then there is a case where users can use cooling control synchronously. This is a control where adding the cooling control output to the heating control output within the single temperature controller.

■ Setting limit

Range of setting value is decided by the type of temperature sensor. Setting limitation limits the allowable setting temperature range. Also, this limitation is related to the retransmission output.

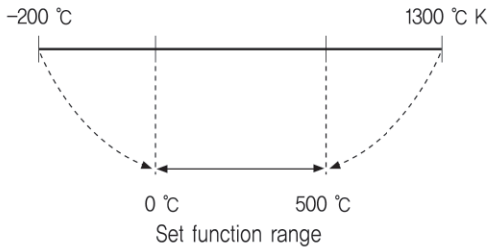

■ ON/OFF action

A control action with two output states, ON and OFF. It is sometimes called "Two-position control." Heating (Reverse action) if the process value is higher than the set value, the output is turned OFF it the process value is lower than set value, the output is turned ON.

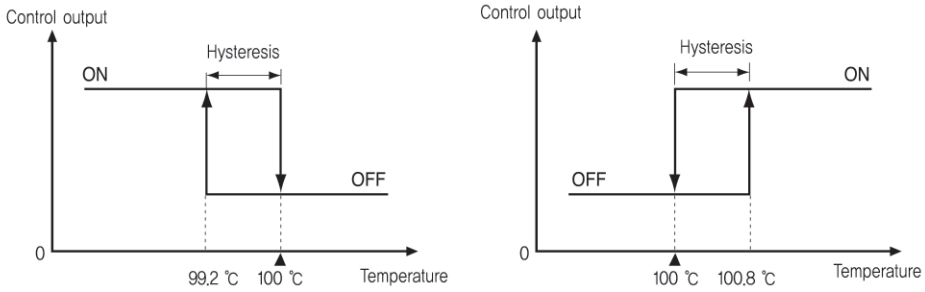

■ Hysteresis

Difference between the value becoming ON and OFF within 2 position action.

■ PID action

Generally control action known as PID refers to the application of integral action and derivative action to the proportional action.

■ Proportional action

Manufacture volume of the controller operates by proportioning to the size of deviation. When present value enters in the range of the proportional band with the set value being centered, manufacture volume will become smaller. Therefore, temperature will become stabilized within the proportional band but offset will be occurred. In order to eliminate this offset, manual reset (MR) has to be performed. Also, there are two kinds of proportional actions which are continuous proportional action and time proportional action.
Continuous proportional action is usually used with the current output and it can cope with the temperature alternation quickly since the manufacture volume continuously varies. Time proportional action is usually used with the relay output or voltage (current) output.

Continuous proportional action (Current output)

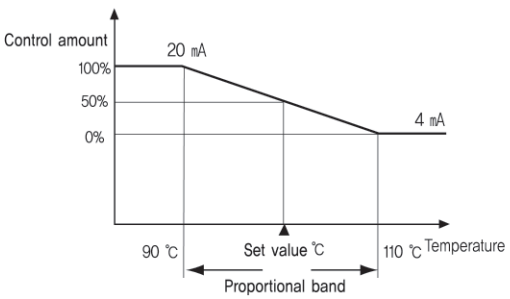

Time sharing proportional control

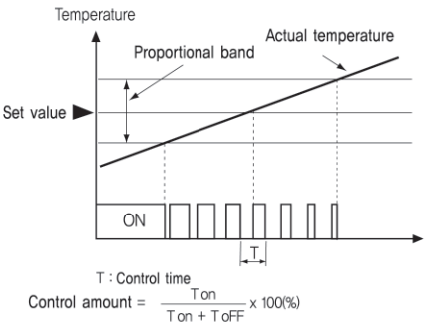

■ Proportional band

An amount of deviation of the controlled variable required to move the final control element through the full range. Often abbreviated Pb, this is the band where proportional gain acts upon. To get smaller MV (manufacture volume), we increase Pb and to get larger MV, we decrease Pb.

■ Cycle time

This is the time usually expressed in seconds for a controller to complete the one on/off cycle. Generally relay output uses 20~30sec and voltage output uses 1~2sec. MV yields the output in percentage according to the corresponding proportional cycle.

■ Offset

Generally the meaning of "Offset" refers to the deviation but the meaning of offset in the control instrument is the difference between the actual temperature value and the set value with MV being stabilized state.

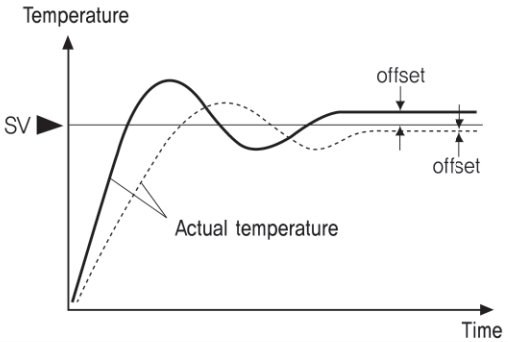

■ Integral action

The integral is the area bounded by the size of the deviation and the time over which the deviation occurred. The integral action changes the manipulated variable in proportion to the integral of the deviation. Generally, the integral action is used together with the proportional action to correct the offset caused by the proportional action.

■ Integral time

Integral time is the time of obtaining MV (manufacture volume) just like proportional action only by using integral time. Short integral time will make integral effect stronger and this can be reason for the hunting occurrence.

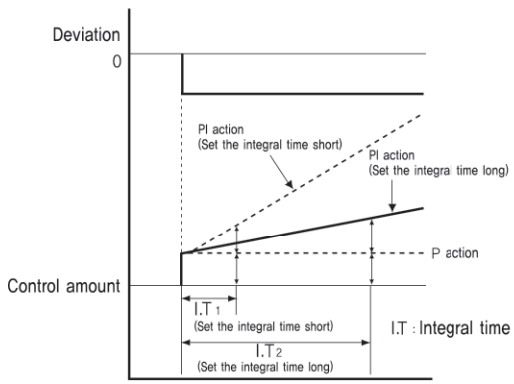

■ Derivative action

Proportional action or integral action is the revision action of the control result so response will become delayed. Derivative action operates by proportioning to the derivative value (velocity) of the corresponding deviation. Non-derivative action prevents the deviation to occur.

■ Derivative time

The time required when the derivative changes by a specific amount to obtain the same manipulated variable as for the proportional action when using only a derivative action. The longer the derivative time is, the stronger the derivative action will be

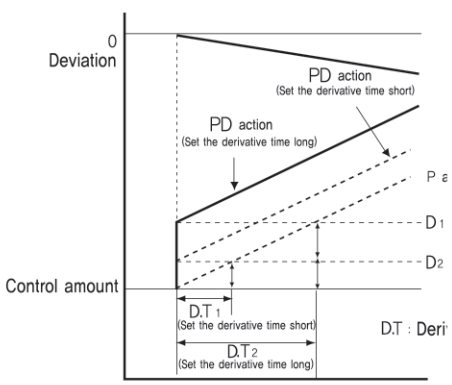

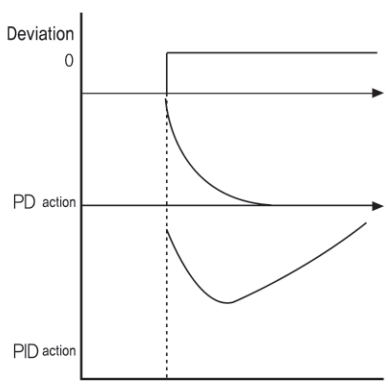

■ ARW : anti reset windup

This is a feature in a three-mode PID controller which prevents the integral (auto reset) circuit from functioning when the temperature is not within the proportional band. (Suppress over-shoot) Performing I action when the temperature of controlling object starts to increase, it will become over-integrated and considerable over-shoot will occur. Because I action is used when eliminating the offset, please limits range as a minimum including the area where offset will occur. Generally set the corresponding range "percentage of proportional band"

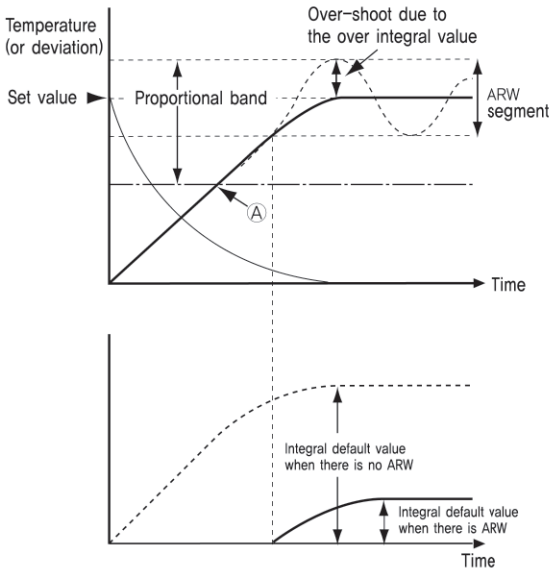

■ Dead band when performing heating/cooling control

Space (range) between the heating proportional band and cooling proportional band when performing heating/cooling operation

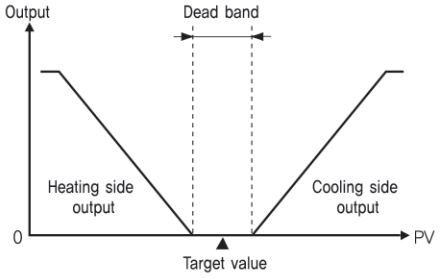

■ Over lap when performing heating/cooling control

Overlap of the heating proportional band and cooling proportional band when performing heating/cooling operation

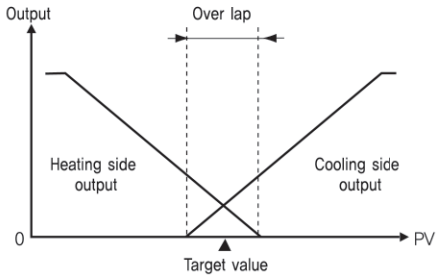

■ Relay contact output

Generally, contact capacity of relay used in temperature controller is small so it cannot operate with huge load such as heater and etc. Therefore, it is required to install electronic contractor (magnet) on the outside of the machine.

■ Voltage pulse output

Voltage pulse output yields 0/12V or 0/24V voltage pulse signal output. Install SSR on the outside and use it. Although SSR operation by voltage pulse output is time proportional control, controlling large load by making ON/OFF cycle short does not affect anything on the operation because it is non-contact.

■ Current output

General current output is 4 ~ 20 mA. It does not operate the load directly. It is used with the attachment of TPR and etc.

■ Triac operation output

Triac drive output drives thyristor device directly and purpose is to perform electric control. Generally the electric output is designed as zero cross operation.

■ Zero cross method

SSR, thristor, triac and etc are one of the ON/OFF selection method and it selects ON/OFF by setting boundary in 0 level of AC current.

■ Retransmission output

Function which yields output as an analog signal such as PV, SV, MV and etc unlike the control action. By using corresponding output signal, it is possible to record as an input signal of recorder.

■ Power supply voltage

Power supply voltage is the supplied power voltage in order to operate the temperature controller.

■ Ambient temperature

Allowable ambient temperature of the temperature controller and etc

■ Ambient humidity

Allowable ambient humidity of the temperature controller and etc

■ Universal input

Function of selecting a signal among various types of input signals. Users can select and set necessary signal input among various thermocouple, RTD, voltage and current signal.

■ Digital filter function

This is a software filter which purpose is to decrease the fluctuation caused by noise of the digital filter present value (PV). It can inhibit effect of the input noise by setting a time constant of corresponding filter suitable to characteristic of the controlling object and level of the corresponding noise. However, if time constant becomes too small then it is impossible to obtain efficiency of the filter and if time constant becomes too big then response of input will go bad.

■ Balance less bumpless

When changing from a certain mode to other certain mode, level of before and after changing may be different. In this case, balance less bumpless function automatically fits to the suitable level. Limiting the sudden output alternation due to the control mode alternation is called "output balance less bumpless" and limiting the sudden set value alternation due to the setting mode alternation is called "setting balance less bumpless."

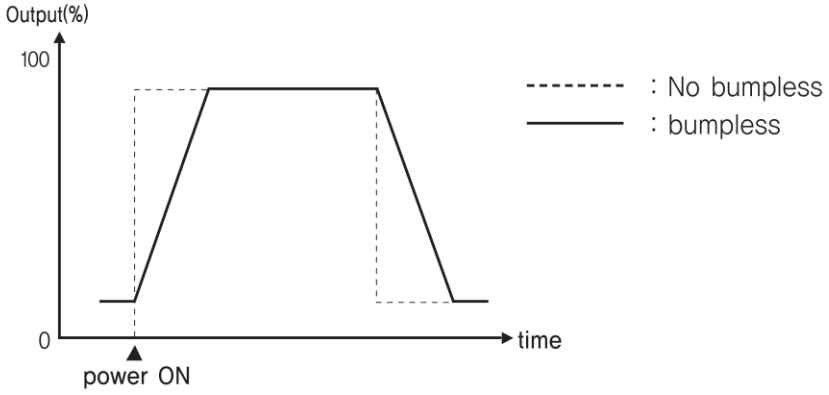

■ Position proportional

This is called ON/OFF servo type. When performing the temperature control with the control motor or the control motor with valve attachment, it will read in the angle of valve by using the potentian meter and generate the Open/Close signal output and control the MV. Output of the temperature controller will yield 2 types of signal which are open and close.