CONTENTS

Product	Type/Series	Part Numbers	Page
Common	Index / Glossary of words and Terms / RoHS Directive		ES4
Push Switches	Contents / Quick Selection Guide		ES7
	Checklist / Application Notes / Common Specifications / Minimum Quantity/Packing Unit		ES9
	ESB33 Vertical Push Switches	ESB33	ES13
	ESB30 Push Switches	ESB30	ES15
	ESE20C / 20D Momentary Push Switches	ESE20C/20D	ES17
Detector Switches	Contents / Quick Selection Guide		ES19
	Checklist / Application Notes / Common Specifications / Minimum Quantity/Packing Unit		ES21
	09HL Detector Switches	ESE58	ES25
	1VR Detector Switches	ESE16	ES28
	1VL Detector Switches	ESE13	ES30
	1HL Detector Switches	ESE18	ES33
	2HL Detector Switches	ESE31	ES38
	2N Detector Switches	ESE22	ES40
	5N Detector Switches	ESE11	ES43
	1HW Detector Switches	ESE23	ES49
	2W Detector Switches	ESE24	ES51

CONTENTS

Product	Type/Series	Part Numbers	Page
Multi Function Switches	Contents / Quick Selection Guide / Minimum Quantity/Packing Unit		ES54
	Jog Ball	EVQWJN	ES57
Light Touch Switches	Contents / Quick Selection Guide		ES59
	Checklist / Application Notes / Common Specifications / Minimum Quantity/Packing Unit		ES62
	4 mm Square SMD Light Touch Switches	EVQP6/6P6/7P6/9P6	ES66
	4.5 mm Square SMD Light Touch Switches	EVQPQ	ES70
	4.9 mm Square SMD Light Touch Switches	EVQPL/3PL/5PL/PT	ES73
	6 mm Square Thin Type SMD Light Touch Switches	EVQP0/Q2	ES76
	3.0 mm×2.0 mm SMD Light Touch Switches	EVPAW	ES80
	3.0 mm×2.6 mm SMD Light Touch Switches	EVPAF	ES83
	3.5 mm×2.9 mm SMD Light Touch Switches	EVPAA	ES86
	4.7 mm×3.5 mm SMD Light Touch Switches	EVQP2/P9/3P2	ES89
	6.0 mm×3.5 mm SMD Light Touch Switches	EVQPE1/PN/5P	ES93
	3.5 mm×2.9 mm Side-operational SMD Light Touch Switches	EVQP7/P3/9P7	ES95
	3.5 mm×2.9 mm Side-operational Half Dive / SMD Light Touch Switches	EVPAN	ES99
	Small-sized Side-operational SMD Light Touch Switches	EVQPU	ES102
	2.8 mm×2.3 mm Side-operational Edge Mount Light Touch Switches	EVPAV	ES106
	4.5 mm×2.2 mm Side-operational Edge Mount Light Touch Switches	EVPAE	ES108
	6.2 mm×2.5 mm Side-operational Edge Mount Light Touch Switches	EVQP4	ES110
	6.1 mm×4.0 mm Side-operational SMD Light Touch Switches	EVQPS	ES113
	5N Type Light Touch Switches	EVQPA/PB	ES117
	5N Type Side-operational Light Touch Switches	EVQPF	ES120
	5N Type 2R Light Touch Switches	EVQ2	ES122
	5N Type Side-operational 4R Light Touch Switches	EVQPC	ES124
	Round Type 2R Light Touch Switches	EVQ11	ES126
	6.0 mm×3.5 mm Light Touch Switches	EVQPE	ES128
	6.0 mm×3.5 mm 2R Light Touch Switches	EVQPJ	ES130
	Over Travel Light Touch Switches	EVQP0	ES132
	4 mm Square Double-action SMD Light Touch Switches	EVPAH	ES134
	6 mm Square Thin Type Double-actionl SMD Light Touch Switches	EVQPR/Q0/3PR	ES137
	4.7 mm×3.5 mm Double-action Side-operational SMD Light Touch Switches	EVPAJ	ES140
	6.2 mmx3.7 mm Double-action Side-operational Edge Mount / SMD Light Touch Switches	EVQQ0	ES143
	6 mm Square Long Travel SMD Light Touch Switches	EVQP0/P1/9P	ES146
	6 mm Square Long Travel 2 terminals SMD Light Touch Switches	EVPAS	ES149
	6 mm Square Long Travel 2R Light Touch Switches	EVQPV	ES152
	8 mm Square Long Travel SMD Light Touch Switches	EVQQ1	ES154
	8 mm Square Long Travel 2R Light Touch Switches	EVQQJ	ES156
	10 mm Square Center Space Long Travel SMD Light Touch Switches	EVPAD	ES158

00 Oct. 2012

Index

ES13 ESB33 Vertical Push Switches (ESB33)	ES15 ESB30 Push Switches (ESB30)	ES17 ESE20C/20D Momentary Push Switches (ESE20C/20D)	ES25 09HL Detector Switches (ESE58)
ES28 1VR Detector Switches (ESE16)	ES30 1VL Detector Switches (ESE13)	ES33 1HL Detector Switches (ESE18)	ES38 2HL Detector Switches (ESE31)
ES40 2N Detector Switches (ESE22)	ES43 5N Detector Switches (ESE11)	ES49 1HW Detector Switches (ESE23)	ES51 2W Detector Switches (ESE24)
ES57 Jog Ball (EVQWJN)	ES66 4 mm Square SMD Light Touch Switches (EVQP6/6P6/7P6/9P6)	ES70 4.5 mm Square SMD Light Touch Switches (EVQPQ)	ES73 4.9 mm Square SMD Light Touch Switches (EVQPL/3PL/5PL/PT)
ES76 6 mm Square Thin Type SMD Light Touch Switches (EVQP0/Q2)	NEW ES80 3.0 mm×2.0 mm SMD Light Touch Switches (EVPAW)	ES83 3.0 mm×2.6 mm SMD Light Touch Switches (EVPAF)	ES86 3.5 mm×2.9 mm SMD Light Touch Switches (EVPAA)
ES89 4.7 mm×3.5 mm SMD Light Touch Switches (EVQP2/P9/3P2)	ES93 6.0 mm×3.5 mm SMD Light Touch Switches (EVQPE1/PN/5P)	ES95 3.5 mm×2.9 mm Side-operational SMD Light Touch Switches (EVQP7/P3/9P7)	ES99 3.5 mm×2.9 mm Side-operational Half Dive / SMD Light Touch Switches (EVPAN)

Design and specifications are each subject to change without notice. Ask factory for the current technical specifications before purchase and/or use.
Should a safety concern arise regarding this product, please be sure to contact us immediately.

Index

ES102 Small-sized Side-operational SMD Light Touch Switches (EVQPU)	NEW ES106 2.8 mm×2.3 mm Side-operational Edge Mount Light Touch Switches (EVPAV)	ES108 4.5 mm×2.2 mm Side-operational Edge Mount Light Touch Switches (EVPAE)	ES110 6.2 mm×2.5 mm Side-operational Edge Mount Light Touch Switches (EVQP4)
ES113 6.1 mm×4.0 mm Side-operational SMD Light Touch Switches (EVQPS)	ES117 5N Type Light Touch Switches (EVQPA/PB)	ES120 5N Type Side-operational Light Touch Switches (EVQPF)	ES122 5N Type 2R Light Touch Switches (EVQ2)
ES124 5N Type Side-operational 4R Light Touch Switches (EVQPC)	ES126 Round Type 2R Light Touch Switches (EVQ11)	ES128 6.0 mm×3.5 mm Light Touch Switches (EVQPE)	ES130 6.0 mm×3.5 mm 2R Light Touch Switches (EVQPJ)
ES132 Over Travel Light Touch Switches (EVQP0)	ES134 4 mm Square Double-action SMD Light Touch Switches (EVPAH)	ES137 6 mm Square Thin Type Double-actionl SMD Light Touch Switches (EVQPR/Q0/3PR)	ES140 4.7 mm×3.5 mm Double-action Side-operational SMD Light Touch Switches (EVPAJ)
ES143 6.2 mm×3.7 mm Double-action Side-operational Edge Mount / SMD Light Touch Switches (EVQQ0)	ES146 6 mm Square Long Travel SMD Light Touch Switches (EVQP0/P1/9P)	NEW ES149 6 mm Square Long Travel 2 terminals SMD Light Touch Switches (EVPAS)	ES152 6 mm Square Long Travel 2R Light Touch Switches (EVQPV)
ES154 8 mm Square Long Travel SMD Light Touch Switches (EVQQ1)	ES156 8 mm Square Long Travel 2R Light Touch Switches (EVQQJ)	ES158 10 mm Square Center Space Long Travel SMD Light Touch Switches (EVPAD)	

Design and specifications are each subject to change without notice. Ask factory for the current technical specifications before purchase and/or use.
Should a safety concern arise regarding this product, please be sure to contact us immediately.

■ Glossary of Words and Terms

● **Rating**
Maximum working voltage and current of switches

● **Contact resistance**
Resistance value of contact position, included specific resistance of material and usually measured by voltage drop at 1 A 5 Vdc.

● **Switching timing**
Two timing modes: shorting and non-shorting.
The change-over sequence of each circuit for two or more circuits is expressed by this timing.

① **Shorting**
Common terminals are connected with the other one or more terminals when switching.

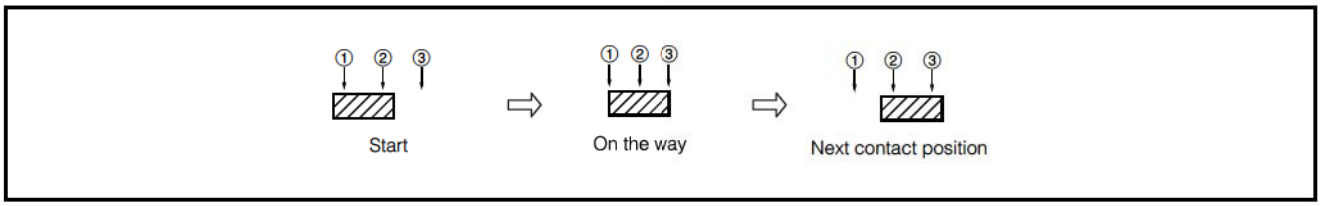

② **Non-shorting**
Common terminals are connected with none of the other terminals.

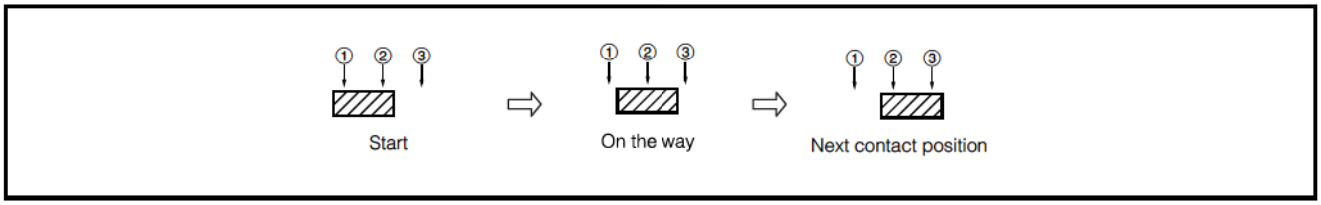

■ RoHS Direcive

RoHS Directive : The restriction of the use of certain hazardous substances in electrical and electronic equipment

The products introduced in this catalog conform to the RoHS Directive* (enforced in July 2006).
(Newly ordered products will conform to the RoHS Directive.)
Please contact our sales staff for inquiries about the RoHS compliance of currently used products.

Design and specifications are each subject to change without notice. Ask factory for the current technical specifications before purchase and/or use.
Should a safety concern arise regarding this product, please be sure to contact us immediately.

CONTENTS

Page

■Quick Selection Guide ····· ES8
■Checklist Before Inquiry ····· ES9
■Application Notes ····· ES10
■Common Specifications ····· ES11
■Minimum Quantity/Packing Unit ····· ES12
■ESB33 Vertical Push Switches (ESB33) ····· ES13
■ESB30 Push Switches (ESB30) ····· ES15
■ESE20C/20D Momentary Push Switches (ESE20C/20D) ····· ES17

■ Quick Selection Guide

Type, Series	Country of origin	Lock Travel				Term. Pitch (mm)	Poles		Page
		1.5 mm	2.45 mm	2.5 mm	2.8 mm		1	2	
ESB33 Vertical Push Switches (H=6.0) 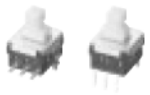	China	○				2.5		○	ES13
ESB30 Push Switches (H=12.5)	Japan			○		2.5		○	ES15
ESE20C/20D Momentary Push Switches (H=8.9)	China					6.0×8.0	○		ES17

Country of origin : As of April 2013

Design and specifications are each subject to change without notice. Ask factory for the current technical specifications before purchase and/or use.
Should a safety concern arise regarding this product, please be sure to contact us immediately.

■ Checklist Before Inquiry

When specifying Push Switches, please take advantage of our standard products for better price and delivery. Please inquire about the following items before ordering.

Item				Information (Requirements)
Common	C-1	Inquiry purpose		New use, Modification, Others ( )
	C-2	Modification	Previous supplier	
			Conventional part No.	
			Purpose	
	C-3	Application	Equipment	
			Environment	Indoor/Outdoor use, Stationary/Portable set, High humidity, SO_2, NaCl
			Temperature	(°C) to (°C)
Rating				0.1 A 12 Vdc, 0.1 A 24 Vdc, 0.2 A 24 Vdc, 0.3 A 30 Vdc, 1.0 A 30 Vdc
Shapes/Dimensions	M-1	Operation	Operation type	Vertical, Horizontal
			Operating force	When specially requested (N)
	M-2	Circuit Diagram	Number of poles	1-pole, 2-pole
			Number of contacts	1-contact, 2-contact
			Switching mode (timing)	Not requested, Non-shorting (NS)
	M-3	Travel	Lock travel	0.8 mm, 1.3 mm, 1.5 mm, 2.4 mm, 2.5 mm, 2.8 mm
			Full travel	1.5 mm, 2.0 mm, 2.3 mm, 2.5 mm, 3.2 mm, 3.5 mm, 4.5 mm
	M-4	Terminals	Shape	PWB, Forming shape: ( )
			Pitch	2.0 mm, 5.0 mm
	M-5	Lever	Top dimensions	Width (mm) × Height (mm) × Length (mm)
			Material	UL filed (Flame retardant: 94HB, 94V-0)
Others	L-1	Anti-electrostatic		When specially requested ( )
	L-2	Soldering conditions		Temp. (°C), Time (s), Specific gravity of flux ( ), Preheat condition ( )
	L-3	Special requirements for endurance		
	L-4	Special requirements for safety		
	L-5	Other questionnaires		

Notes:
1. When you specify custom types (custom-made), new tooling and jigs, and/or equipment may be required. It will be necessary to confirm your estimates of quantity and development schedule as accurately as possible.
2. Please inform us if you designate your own part number.

Design and specifications are each subject to change without notice. Ask factory for the current technical specifications before purchase and/or use.
Should a safety concern arise regarding this product, please be sure to contact us immediately.

■ ⚠ Application Notes

When using our Push Switches, please observe the following items ("prohibited items") and be cautious of the following in order to prevent dangerous accidents and deterioration of performance.

1. Prohibited items and notes on mounting

1. When soldering (including preheating), do not solder in the locked condition.
2. When soldering using a soldering iron, soldering conditions vary with the tip shape of the soldering iron, wattage, and PWB thickness. Thoroughly check the conditions in advance, including the heat resistance rating of the solder.
3. Do not apply a load to terminals when soldering. Care should be taken in this regard because a load may deteriorate electric and mechanical characteristics.
4. Since the push switches are not sealed, do not wash them.
5. When mounting a push switch to a through-hole type PWB, the influence of thermal stress on the switch is greater than that on one-sided PWB. Be sure to check the influence as well as the heat resistance rating of the solder.

2. Notes on circuit conditions

1. To ensure reliability, use switches within the rated range, as designated in "Product Specifications for Information."
2. To avoid malfunction of a set due to bounce generated by turning the switch ON and OFF, and/or due to chatter generated by external vibrations, etc., take the following into consideration in design.
   - Read contact multiple times.
     (In Case of microcomputer Processing)
   - Set a delay time.
     (Recommendation: 3 or more times of reading with the cycle of 3 ms or over)
   - Prepare a CR integrating circuit.
     (Recommendation: A time constant of 6 ms or over)
3. When circuits of a two-circuit type are connected in parallel, switching timing (non-shorting, etc.) described in the specifications is not assured.

3. Prohibited items and notes on mounting and operating conditions

1. In principle, operate the center of the lever.

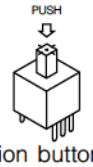

2. For mounting an operation button:
   1) Design so that the button is mounted to the center of the lever.

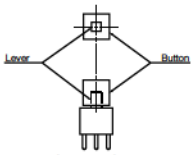

   2) Design a set so that the gap (a) between the cabinet and the button is as small as possible.
   (a)=0.1 to 0.3mm

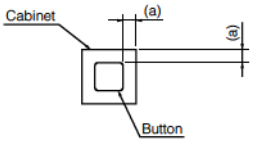

   3) Design so that the load in removal and mounting of the button is within the range of the switch's strength rating of the operational part.

3. If multiple switches are placed side by side, or a switch is placed near another part, the gap between the switch and the adjacent switch/part must be at least 1mm to prevent affect of flux and to ensure proper insulation distance.
4. Design and use so that external stress is not continuously applied to the soldering parts in a set. External stress may cause pattern peeling and solder cracks on a PWB.
5. When mounting a switch, check the ON/OFF position.
6. Contact lubricant, which is used in push switches, may flow out to the exterior of the switch due to the structure. For design review, sufficiently check the operating conditions.
7. Do not pull the switch rod while it is locked. Otherwise, the self-locking function may be broken, resulting in a locking failure or malfunction. Make sure that the switch is released especially when attaching/detaching a button to the rod and assembling/disassembling the target product. (This applies to the self-locking switches) Set the strength for detaching your button (knob) from our switch rod to a maximum of 10 N in order to minimize the possibility of a breakdown of the locking function. When designing your button, refer to the following shape and dimensions.
   Before adopting our switches, check the requirements carefully.

Reference of Customer's button design

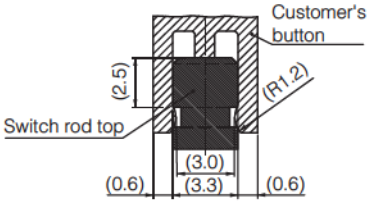

8. Design to avoid operation with continuous lateral pressure (more than 500 mN on the lever).
9. Do not mount a switch by bending switch terminals.
10. Avoid the following ambient surroundings and other conditions because they may affect performance:
    - Under an atmosphere of corrosive gas such as Cl_2, H_2S, NO_x, or SO_2
    - In atmospheres of residual water drops, dew condensation, or adhesive water drops
    - In liquids such as water, salt solution, oil, chemicals, and organic solvents
    - In direct sunlight
    - In dusty locations
11. Do not apply a shock to the switch lever during mounting of the switch on the printed circuit board and installation in the target product.

4. Prohibited items and notes on storage conditions

Since contact characteristics and soldering quality may deteriorate due to sulfuration and oxidation of contacts and terminals, pay heed to the following items.

1. For storage and transport of the switches, avoid unpacking them, and store them at room temperature and room humidity. Use them as soon as possible, generally within 3 months, or within a maximum of 6 months after delivery.
2. Do not store the switches under conditions of high temperature and/or high humidity, or in a location where corrosive gas may be generated.
3. If some units remain after unpacking, store them after applying adequate moisture-proof and gas-proof treatment.

5. For use in equipment for which safety requested

Although care is taken to ensure switch quality, variation of contact resistance (increase), short circuits, open circuits, and temperature rise are some problems that might be generated. To design a set which places maximum emphasis on safety, review the affect of any single fault of a switch in advance and perform virtually fail-safe design to ensure maximum safety by:

1. preparing a protective circuit or a protective device to improve system safety, and
2. preparing a redundant circuit to improve system safety so that the single fault of a switch does not cause a dangerous situation.

6. For actual use, be sure to refer to "Product Specifications for Information."

Design and specifications are each subject to change without notice. Ask factory for the current technical specifications before purchase and/or use.
Should a safety concern arise regarding this product, please be sure to contact us immediately.

■ Common Specifications(Standard)

Mechanical Specifications	Lever Strength	To withstand 80 N push force applied in operating direction for 15 seconds
	Terminal Strength	To withstand 5 N push force applied on the end of terminal in any direction for 1 minute without damage and/or loosening
Electrical Specifications	Voltage drop	0.1 V max. between terminals after 4 or 5 switching operations under the rated load
	Insulation Resistance	Terminal to Terminal and Terminal to Frame: 100 MΩ min. (at 500 Vdc) (Does not apply to the insulation resistance during switching operations)
	Dielectric Withstanding Voltage	Terminal to Terminal and Terminal to Frame: 500 Vac for 1 minute
Environmental Specifications	Temperature Range	–10 °C to +70 °C (Standard)
	Heat Resistance	+70 °C for 96 hours (Standard)
	Low Temperature Resistance	–10 °C for 96 hours (Standard)
	Humidity Resistance	40 °C, 90 % to 95 % RH for 96 hours
	Non-loaded Life	Number of operations : 10000 cycles Voltage drop : 0.5V max. (ESB32) Voltage drop : 0.2V max. (ESB20, ESB30, ESB32)
	Loaded Life	

Type	No. of operations	Voltage drop
ESB33	30000 cycles	0.5 V max.
ESB30	30000 cycles	0.2 V max
ESE20	30000 cycles	0.2 V max.

Design and specifications are each subject to change without notice. Ask factory for the current technical specifications before purchase and/or use.
Should a safety concern arise regarding this product, please be sure to contact us immediately.

■ Minimum Quantity/Packing Unit

Please place an order by an integer multiple of the Quantity/Carton.

Type, Series	Part No.	Packaging	Quantity/Carton (Export)	Min. Q'ty/ Packing Unit
ESB33 Vertical Push Switches	ESB33□□□	Polyethylene Bag (Bulk)	2000 pcs. (8000 pcs.)	100 pcs.
		Embossed Taping (Reel Pack)	1800 pcs. (7200 pcs.)	300 pcs.
ESB30 Push Switches	ESB30□□□□	Tray Pack	2400 pcs. (9600 pcs.)	480 pcs.
ESE20C/20D Momentary Push Switches	ESE20□□□□	Polyethylene Bag (Bulk)	1200 pcs. (4800 pcs.)	60 pcs.

Design and specifications are each subject to change without notice. Ask factory for the current technical specifications before purchase and/or use.
Should a safety concern arise regarding this product, please be sure to contact us immediately.

ESB33 Vertical Push Switches

Type: **ESB33 (H=6.0 mm)**

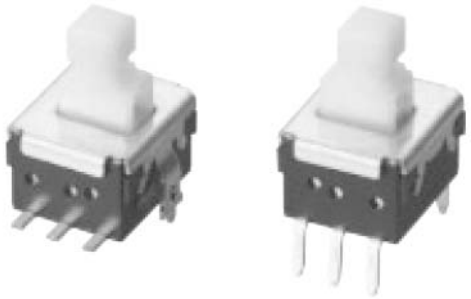

■ Features
- Low profile (H=6.0 mm)
- 3 N and 5 N operating force availables

■ Recommended Applications
- Operation switches for automobiles (heater control switches etc.)
- Secondary power switches for lower voltage in consumer electronic equipment and different types of mode switches

■ Explanation of Part Numbers

1	2	3	4	5	6	7	8
E	S	B	3	3			
Product Code			Type		Design No.		

■ Specifications

Rating	50 µA 3 Vdc to 0.2 A 14 Vdc (Resistive load)
Travel	Lock travel=1.5 mm Full travel=2.3 mm
Mounting Height	6.0 mm
Poles and Throws	2-poles 2-throws
Operating Mode	Self-lock, Non-lock
Switching Mode	Non-shorting
Minimum Quantity/Packing Unit	100 pcs. Polyethylene Bag (Bulk) / 300 pcs. Embossed Taping (Reel Pack)
Quantity/Carton	2000 pcs. Polyethylene Bag (Bulk) / 1800 pcs. Embossed Taping (Reel Pack)

■ Standard Products

Operating Mode	Terminals	Packaging	Operating Force	Part Numbers	Lever Color
PP	Wave Soldering	Polyethylene Bag (Bulk)	3.0 N±1.0 N	ESB33133	Light Yellow
NL				ESB33134	
PP	Surface Mount	Embossed Taping (Reel)	3.0 N±1.0 N	ESB33535	Light Yellow
NL				ESB33536	

Note: PP=Self-lock NL=Non-lock

Design and specifications are each subject to change without notice. Ask factory for the current technical specifications before purchase and/or use.
Should a safety concern arise regarding this product, please be sure to contact us immediately.

■ Dimensions in mm (not to scale)

No. 1

ESB33133
2-poles 2-throws

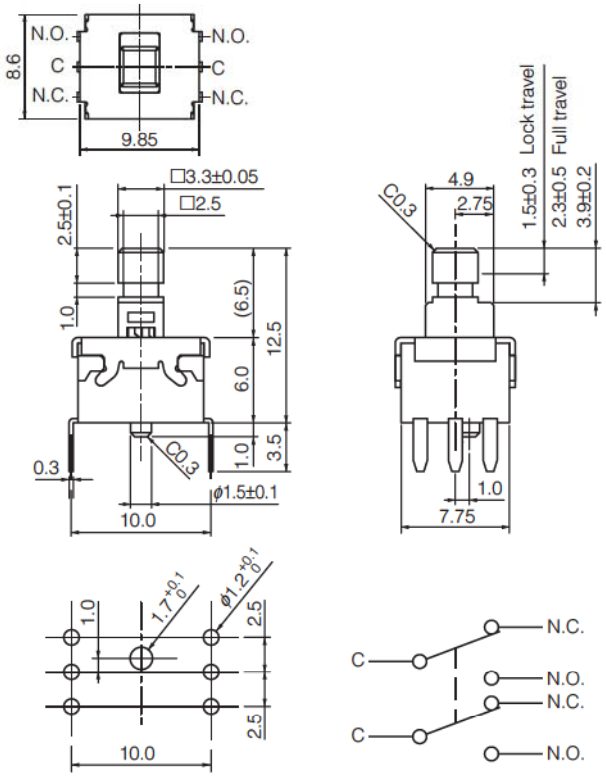

PWB mounting hole for reference
(Tolerance: ±0.05)
View from terminal side

Circuit diagram

No. 2

ESB33536
2-poles 2-throws

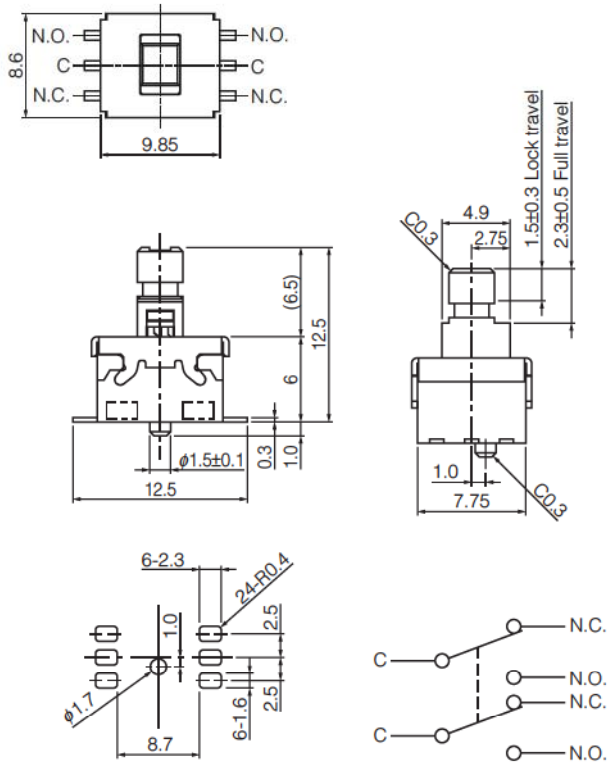

PWB mounting hole for reference
Tolerance : ±0.05 (t=1.6 mm)

Circuit diagram

■ Packaging Specifications
Standard Reel Dimensions in mm (not to scale)

Taping Reel

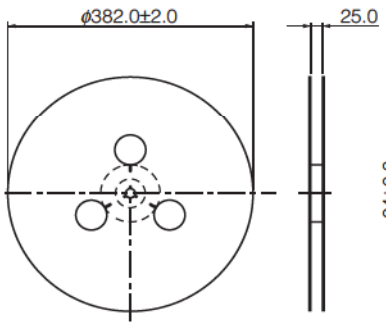

Embossed Carrier Taping

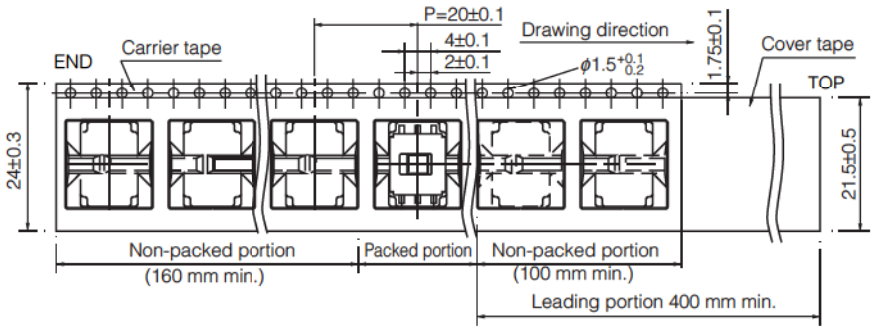

■ Application Notes:

- Operating force should be applied at the center of the lever.

Design and specifications are each subject to change without notice. Ask factory for the current technical specifications before purchase and/or use.
Should a safety concern arise regarding this product, please be sure to contact us immediately.

ESB30 Push Switches

Type: **ESB30 (H=12.5 mm)**

■ Features

- Reduced interlock operation switching noise (-10 dB compared to the current value)
- Simultaneous locking prevention mechanism

■ Recommended Applications

- Operation switches for automobiles (air conditioners switches, Hazard switches, etc.)
- Secondary power switches for lower voltage in consumer electronic equipment and different types of mode switches

■ Explanation of Part Numbers

1	2	3	4	5	6	7	8	9	10
E	S	B	3	0					
Product Code			Type		Travel	Operating	Design No.		

Travel: A : 1.5 mm, B : 2.5 mm

Operating: 1 : PP (Self-lock), 3 : NL (Non-lock)

■ Specifications

Rating	50 µA 3 Vdc to 0.2 A 14 Vdc (Resistive load)
Travel	Lock Travel=2.5 mm Full Travel=3.5 mm
Mounting Height	12.5 mm
Poles and Throws	2-poles 2-throws
Operating Mode	Self-lock, Non-lock
Switching Mode	Non-shorting
Operating Force	2.0 N±1.0 N, 3.5 N±1.5 N
Minimum Quantity/Packing Unit	480 pcs. (Tray Pack)
Quantity/Carton	2400 pcs.

Design and specifications are each subject to change without notice. Ask factory for the current technical specifications before purchase and/or use.
Should a safety concern arise regarding this product, please be sure to contact us immediately.

■ Standard Products

Operating Force	Lever Height	Lock Travel	Operating Mode	Terminal Shape	
				Straight	Formed
2 N±1.0 N	20.5 mm	2.5 mm	PP	ESB30B132	ESB30B102
			NL	ESB30B304	ESB30B305
3.5 N±1.5 N	20.5 mm	2.5 mm	PP	ESB30B103	ESB30B133
			NL	ESB30B332	ESB30B333

Note: **PP**=Self-lock, **NL**=Non-lock

■ Dimensions in mm (not to scale)

ESB30B132

2-poles 2-throws

Lock Travel	Full Travel
2.5 mm	3.5 mm

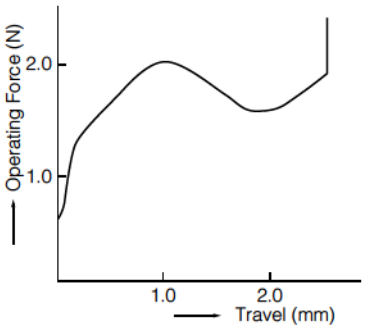

F-S Characteristics

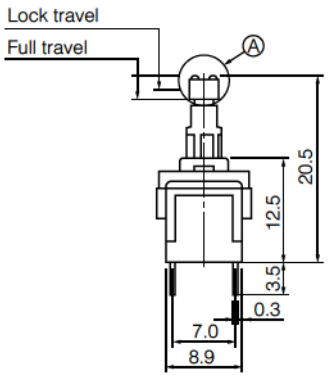

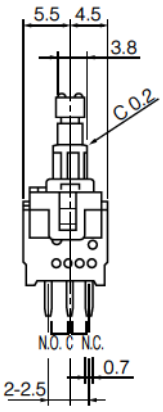

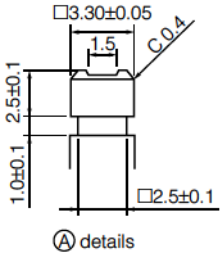

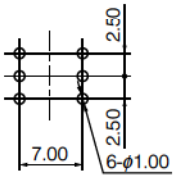

PWB mounting hole for reference
(Tolerance:±0.05)
View from terminal side

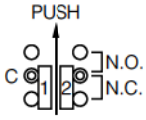

Circuit diagram
(View from terminal side)

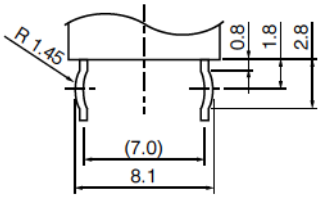

Forming dimension of terminal
(Except for common terminal)

■ Application Notes:

- Operating force should be applied at the center of the lever.

Design and specifications are each subject to change without notice. Ask factory for the current technical specifications before purchase and/or use.
Should a safety concern arise regarding this product, please be sure to contact us immediately.

ESE20C/20D Momentary Push Switches

Type: **ESE20C/ESE20D (H=8.9 mm)**

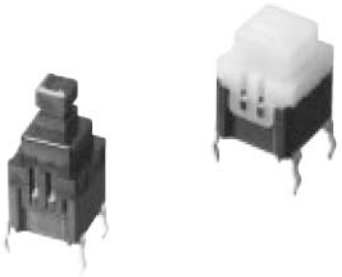

■ Features

- User-friendly tactile feedback when operated
- Long over-travel

■ Recommended Applications

- Operation switches for automobiles (switches for heater controls, overdrive, steering, etc.)
- Secondary power switches for lower voltage in consumer electronic equipment and different types of mode switches

■ Explanation of Part Numbers

1	2	3	4	5	6	7	8	9
E	S	E	2	0				
Product Code			Type			Design No.		

C : For automotive use
D : For consumer products

■ Specifications

Rating	0.01 A 5 Vdc to 0.1 A 14 Vdc (Resistive load)
Full Travel	2.5 mm
Mounting Height	8.9 mm
Poles and Throws	1-pole 1-throw
Operating Mode	Non-lock
Operating Force	2.0 N±1.0 N, 4.0 N±1.5 N
Minimum Quantity/Packing Unit	60 pcs. Polyethylene Bag (Bulk)
Quantity/Carton	1200 pcs.

■ Standard Products

Full Travel	Operating Force	Lever Height	Terminal Shape	
			Straight	Formed
2.5 mm	2.0 N±1.0 N	12.5 mm	ESE20∗323	ESE20∗321
		17.5 mm	ESE20∗423	ESE20∗421
	4.0 N±1.5 N	12.5 mm	ESE20∗343	ESE20∗341
		17.5 mm	ESE20∗443	ESE20∗441

∗···C : For automotive use D : For consumer products

Design and specifications are each subject to change without notice. Ask factory for the current technical specifications before purchase and/or use.
Should a safety concern arise regarding this product, please be sure to contact us immediately.

■ Dimensions in mm (not to scale)

No. 1

ESE20✱4□□

✱···C : For automotive use

D : For consumer products

1-pole 1-throw

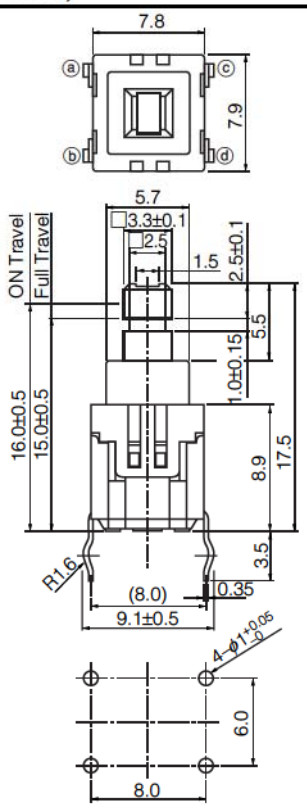

PWB mounting hole for reference
Tolerance : ±0.05 (t=1.6 mm)
View from terminal side

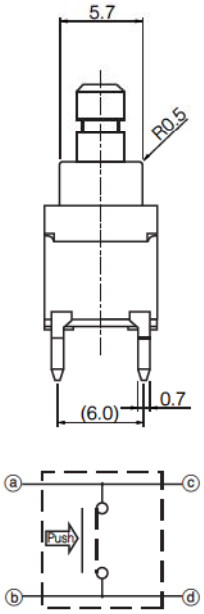

Circuit diagram

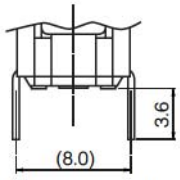

Straight Terminal

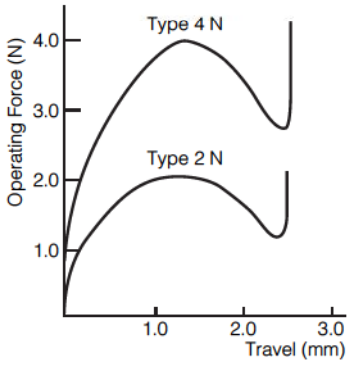

F-S Characteristics

No. 2

ESE20✱3□□

✱···C : For automotive use

D : For consumer products

1-pole 1-throw

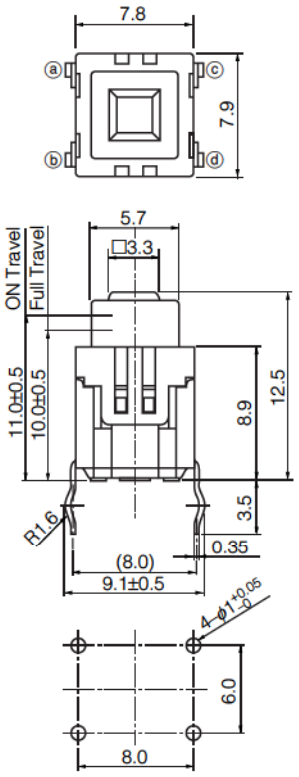

PWB mounting hole for reference
Tolerance : ±0.05 (t=1.6 mm)
View from terminal side

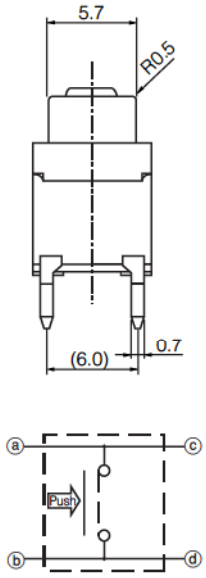

Circuit diagram

■ Application Notes:

● Operating force should be applied at the center of the lever.

Design and specifications are each subject to change without notice. Ask factory for the current technical specifications before purchase and/or use.
Should a safety concern arise regarding this product, please be sure to contact us immediately.

CONTENTS

Page

■Quick Selection Guide ····· ES20
■Checklist Before Inquiry ····· ES21
■Application Notes ····· ES22
■Common Specifications ····· ES23
■Minimum Quantity/Packing Unit ····· ES24
■9HL Detector Switches (ESE58) ····· ES25
■1VR Detector Switches (ESE16) ····· ES28
■1VL Detector Switches (ESE13) ····· ES30
■1HL Detector Switches (ESE18) ····· ES33
■2HL Detector Switches (ESE31) ····· ES38
■2N Detector Switches (ESE22) ····· ES40
■5N Detector Switches (ESE11) ····· ES43
■1HW Detector Switches (ESE23) ····· ES49
■2W Detector Switches (ESE24) ····· ES51

■ Quick Selection Guide

Type, Series	Appearance	Part No.	Country of origin	Poles & Throws	Page
09HL Detector Switches		ESE58	Japan	1-1	ES25
1VR Detector Switches		ESE16	Japan	1-1	ES28
1VL Detector Switches		ESE13	Japan	1-1	ES30
1HL Detector Switches		ESE18	Japan	1-1	ES33
2HL Detector Switches		ESE31	Japan/China	1-1	ES38
2N Detector Switches		ESE22	Japan	1-1	ES40
5N Detector Switches		ESE11	Japan/China	1-1	ES43
1HW Detector Switches		ESE23	Japan	1-2	ES49
2W Detector Switches		ESE24	Japan	1-2	ES51

Country of origin : As of April 2013

Design and specifications are each subject to change without notice. Ask factory for the current technical specifications before purchase and/or use.
Should a safety concern arise regarding this product, please be sure to contact us immediately.

■ Checklist Before Inquiry

When specifying Detector Switches, please take advantage of our standard products for better priceing and delivery. Please inquire about the following items before ordering.

Item					Information (Requirements)
Common	C-1	Inquiry purpose			New use, Modification, Others ( )
	C-2	Modification	Previous supplier		
			Conventional part No.		
			Purpose		
	C-3	Application	Equipment		
			Design standard of pushing distance of lever		At switching on (when not pushing) : Pushing distance (Pushing the point of lever ☐ mm) At switching off (when not pushing) : Object of detection is ☐ apart from the point of lever ☐ not apart from the point of lever (Pushing about ☐ mm)
			Operation frequency		☐ Operate the switches every day. (☐ times a day) ☐ Almost everytime, the switches are stayed in the released condition. (☐ times a week / month / year) ☐ Almost everytime, the switches are pushed in the designed position. (☐ times a week / month / year)
			Temperature		(°C) to (°C)
Rating					☐ mA ☐ V ☐ dc ☐ mA ☐ V ☐ ac Do you give "inrush current" to switches ? : ☐ YES ☐ NO
Shapes/Dimensions	M-1	Operation	Operation type		Vertical, Horizontal
	M-2	Mounting	Mounting height	Vertical	PWB to upper suface of housing: (mm)
				Horizontal	PWB to center rod: (mm)
	M-3	Terminals			PWB, Solder lug
Others	L-1	Surface Mount	Connection		Manual soldering, Wave soldering, Reflow Soldering
			Packing Unit		Polyethylene Bag (Bulk), Embossed Taping (Reel Pack)
	L-2	Special requirements for endurance			
	L-3	Special requirements for safety			
	L-4	Other questionnaires			

✱ The Electrical Appliance and Material Safety Law (Japan) was revised on March 1st, 1988.
Power switches described here are not under jurisdiction of this law, but comply with its technical requirements.

Notes:
1. When selecting Switches, please consider using our standard products for better prices and short delivery times.
2. Please inform the following items when ordering.

Design and specifications are each subject to change without notice. Ask factory for the current technical specifications before purchase and/or use.
Should a safety concern arise regarding this product, please be sure to contact us immediately.

■ ⚠ Application Notes

When using our Slide Switches, please observe the following items ("prohibited items") and be cautious of the following in order to prevent dangerous accidents and deterioration of performance.

1. Prohibited items and notes on mounting

1. When soldering (including preheating), set the lever to the release position.
2. When soldering using a soldering iron, soldering conditions vary with the tip shape of the soldering iron, wattage, and PWB thickness. Thoroughly check the conditions in advance, including the heat resistance rating of the solder.
3. Do not apply a load to terminals when soldering. Care should be taken in this regard because a load may deteriorate electric and mechanical characteristics.
4. Since the detector switches are not sealed, do not wash them.
5. When mounting a detector switch to a through-hole type PWB, the influence of thermal stress on the switch is greater than that on one-sided PWB. Be sure to check the influence as well as the heat resistance rating of the solder.
6. For reflow soldering
   When performing reflow soldering using a hot-air oven or an infrared oven, observe the following conditions. Since the temperature applied to a switch and its terminals varies with the type and size of the PWB and the mounting density of the parts, sufficiently check the conditions in advance.

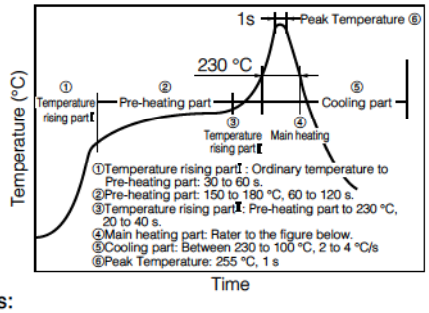

Notes:
- Measure temperature profile at the part surface.
- Do not perform reflow soldering more than twice.

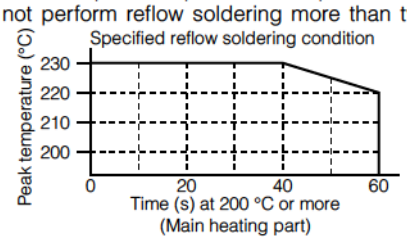

2. Notes on circuit conditions

1. To ensure reliability, use detector switches within the rated range, as designated in "Product Specifications for Information."
2. To avoid malfunction of a set due to bounce generated by turning the switch ON and OFF, and/or due to chatter generated by external vibrations, etc., take the following into consideration in design.
   - Read contact multiple times.
     (In Case of microcomputer Processing)
   - Set a delay time.
     (Recommendation: 3 or more times of reading with the cycle of 3 ms or over)
   - Prepare a CR integrating circuit.
     (Recommendation: A time constant of 6 ms or over)

3. Prohibited items and notes on mounting and operating conditions

1. Design so that the load applied to the lever when a set is used is within the rated range of the switch's lever strength.
2. If multiple switches are placed side by side, or a switch is placed near another part, the gap between the switch and the adjacent switch/part must be at least 1 mm to prevent affect of flux and to ensure proper insulation distance.
3. Design and use so that external stress is not continuously applied to the soldering parts in a set in any direction. External stress may cause pattern peeling and solder cracks on a PWB.
4. When mounting a switch (mounting to chassis or button mounting), take care so that no foreign matter enters the switch.
5. Contact lubricant, which is used in detector switches, may flow out to the exterior of the switch due to the structure. For design review, sufficiently check the operating conditions.
6. Avoid the following ambient surroundings and other conditions because they may affect performance:
   - Under an atmosphere of corrosive gas such as Cl_2, H_2S, NO_x, or SO_2
   - In atmospheres of residual water drops, dew condensation, or adhesive water drops
   - In liquids such as water, salt solution, oil, chemicals, and organic solvents
   - In direct sunlight
   - In dusty locations

4. Prohibited items and notes on storage conditions

Since contact characteristics and soldering quality may deteriorate due to sulfuration and oxidation of contacts and terminals, pay heed to the following items.

1. For storage and transport of the switches, avoid unpacking them, and store them at room temperature and room humidity. Use them as soon as possible, generally within 3 months, or within a maximum of 6 months after delivery.
2. Do not store the switches under conditions of high temperature and/or high humidity, or in a location where corrosive gas may be generated.
3. If some units remain after unpacking, store them after applying adequate moisture-proof and gas-proof treatment.

5. For use in equipment for which safety is requested

Although care is taken to ensure switch quality, variation of contact resistance (increase), short circuits, open circuits, and temperature rise are some problems that might be generated.
To design a set which places maximum emphasis on safety, review the affect of any single fault of a switch in advance and perform virtually fail-safe design to ensure maximum safety by:

1. preparing a protective circuit or a protective device to improve system safety, and
2. preparing a redundant circuit to improve system safety so that the single fault of a switch does not cause a dangerous situation.

6. For actual use, be sure to refer to "Product Specifications for Information."

Design and specifications are each subject to change without notice. Ask factory for the current technical specifications before purchase and/or use.
Should a safety concern arise regarding this product, please be sure to contact us immediately.

■ Common Specifications (Standard)

Mechanical Specifications	Lever Strength	To withstand 10 N push force applied in operating direction for 15 seconds (ESE11, 22, 24, 31) To withstand 2 N push force applied in operating direction for 15 seconds (ESE13, 16, 18, 23) To withstand 1 N push force applied in operating direction for 15 seconds (ESE58)
	Terminal Strength	To withstand 3 N push force applied on the end of terminal in any direction for 1 minute [0.5 N : ESE13, 16, 18, 23, 58]
Electrical Specifications	Contact Resistance	500 mΩ max.
	Insulation Resistance	Terminal to Terminal and Terminal to Outer Metal Part: 100 MΩ min. (at 100 Vdc)
	Dielectric Withstanding Voltage	Terminal to Terminal and Terminal to Outer Metal Part: 100 Vac for 1 minute
Environmental Specifications	Operating Temperature Range	−10 °C to +70 °C (ESE11, 22, 24, 31) −10 °C to +60 °C (ESE13, 16, 18, 23, 58)
	Heat Resistance	+80 °C for 96 hours (ESE11, 22, 24) +85 °C for 96 hours (ESE31) +70 °C for 96 hours (ESE13, 16, 18, 23, 58)
	Low Temperature Resistance	−25 °C for 96 hours −40 °C for 96 hours (ESE31)
	Humidity Resistance	40 °C, 90 % to 95 % RH for 96 hours 60 °C, 90 % to 95 % RH for 96 hours (ESE31)
	Non-loaded Life	Number of operations 50000 cycles Contact resistance : 1 Ω max. (ESE11, 13, 24) Contact resistance : 3 Ω max. (ESE22, 31) Voltage drop : 1.5 V max. (ESE16, 18, 58) Voltage drop : 1.0 V max. (ESE23)
	Loaded Life	Number of operations 50000 cycles Contact resistance : 1 Ω max. (ESE11, 13, 24) Contact resistance : 3 Ω max. (ESE22, 31) Voltage drop : 1.5 V max. (ESE16, 18, 58) Voltage drop : 1.0 V max. (ESE23)

Design and specifications are each subject to change without notice. Ask factory for the current technical specifications before purchase and/or use.
Should a safety concern arise regarding this product, please be sure to contact us immediately.

■ Minimum Quantity/Packing Unit

Please place an order by an integer multiple of the Quantity/Carton.

Type, Series	Part No.	Packaging	Quantity/Carton (Export)	Min. Q'ty/ Packing Unit
09HL Detector Switches Type: ESE58	ESE58□	Embossed Taping (Reel Pack)	30000 pcs. (120000 pcs.)	5000 pcs.
1VR Detector Switches Type: ESE16	ESE16□	Embossed Taping (Reel Pack)	24000 pcs. (96000 pcs.)	4000 pcs.
1VL Detector Switches Type: ESE13	ESE13V□	Embossed Taping (Reel Pack)	18000 pcs. (72000 pcs.)	3000 pcs.
	ESE13H□		30000 pcs. (120000 pcs.)	5000 pcs.
1HL Detector Switches Type: ESE18	ESE18□	Embossed Taping (Reel Pack)	30000 pcs. (120000 pcs.)	5000 pcs.
2HL Detector Switches Type: ESE31	ESE31□	Embossed Taping (Reel Pack)	15000 pcs. (60000 pcs.)	2500 pcs.
2N Detector Switches Type: ESE22	ESE22MV21T	Embossed Taping (Reel Pack)	6000 pcs. (24000 pcs.)	1000 pcs.
	ESE22MH22 ESE22MH24		24000 pcs. (96000 pcs.)	4000 pcs.
	ESE22MH27T ESE22MH28T ESE22MH52 ESE22MH54		18000 pcs. (72000 pcs.)	3000 pcs.
	ESE22MH51 ESE22MH53 ESE22MH57 ESE22MH58 ESE22MV21 ESE22MH21 ESE22MH23 ESE22MH27 ESE22MH28	Polyethylene Bag (Bulk)	10000 pcs. (40000 pcs.)	500 pcs.
5N Detector Switches Type: ESE11	ESE11SV□ ESE11MV□ ESE11SH□ ESE11MH□ ESE11HS□ ESE11SF□	Polyethylene Bag (Bulk)	10000 pcs. (40000 pcs.)	200 pcs.
	ESE11MV2		8000 pcs	200 pcs.
	ESE11MV□T (Excluding : ESE11MV2)	Embossed Taping (Reel Pack)	4800 pcs. (19200 pcs.)	800 pcs.
	ESE11MH□T		9000 pcs. (36000 pcs.)	1500 pcs.
1HW Detector Switches Type: ESE23	ESE 23□	Embossed Taping (Reel Pack)	24000 pcs. (96000 pcs.)	4000 pcs.
2W Detector Switches Type: ESE24	ESE24SH□ ESE24SV□ ESE24MH□ ESE24MV□	Polyethylene Bag (Bulk)	10000 pcs. (50000 pcs.)	200 pcs.
	[ESE24SH1 ESE24SH6 ESE24SH7 ESE24SV2 ESE24SV8]		[8000 pcs. (40000 pcs.)]	[160 pcs.]
	ESE24MH□T	Embossed Taping (Reel Pack)	6000 pcs. (24000 pcs.)	1000 pcs.
	ESE24MV□T		3000 pcs. (12000 pcs.)	500 pcs.

Design and specifications are each subject to change without notice. Ask factory for the current technical specifications before purchase and/or use.
Should a safety concern arise regarding this product, please be sure to contact us immediately.

09HL Detector Switches

Type: **ESE58**

■ Features

- Thin body: 0.9 mm.
- Circuit type: Normally-open and normally-closed types are available.
- Lineup with variations in right-left operations.

■ Recommended Applications

- Detection of media in portable electronic equipment (Mobile phones/Digital still cameras/DVCs, etc.)

■ Explanation of Part Numbers

1	2	3	4	5	6	7	8	9
E	S	E	5	8				

Product Code: 1–5 Design No: 7–9

6th	Type
L	Left-side operation type
R	Right-side operation type

■ Specifications

Rating	50 µA 3 Vdc to 10 mA 5 Vdc (Resistive load)
Contact Resistance	500 mΩ max. (Initial)
Insulation Resistance	100 MΩ min. (100 Vdc)
Dielectric Withstanding Voltage	100 Vac for 1 minute
Operating Force	300 mN max.
Mounting Height	0.9 mm
Poles and Throws	1-pole 1-throw
Full Travel (Pushing distance)	With boss : 1.5 mm (1.5 mm) Without boss : 1.25 mm (1.5 mm)
Operating Life	50000 cycles min.
Temperature Range	–10 °C to +60 °C
Heat Resistance	+70 °C for 96 hours
Low Temperature Resistance	–25 °C for 96 hours
Humidity Resistance	+40 °C 90 % to 95 % RH for 96 hours
Minimum Quantity/Packing Unit	5000 pcs. Embossed Taping (Reel Pack)
Quantity/Carton	30000 pcs.

Design and specifications are each subject to change without notice. Ask factory for the current technical specifications before purchase and/or use.
Should a safety concern arise regarding this product, please be sure to contact us immediately.

00 Oct. 2012

■ Dimensions in mm (not to scale)

No. 1 Nomal open type
ESE58L11 J-bent terminals
1-pole 1-throw

with Boss
ESE58L11B

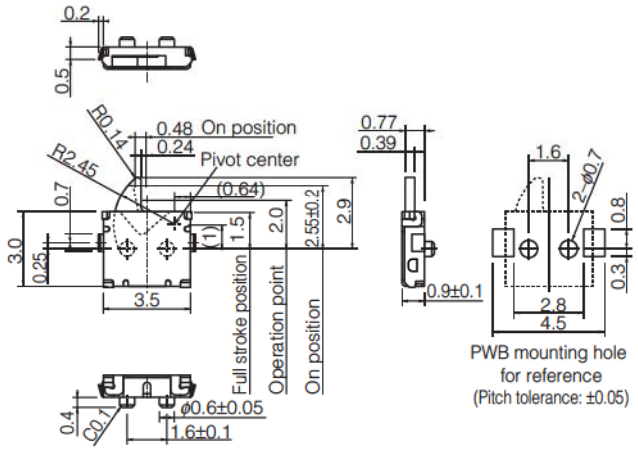

without Boss
ESE58L11A

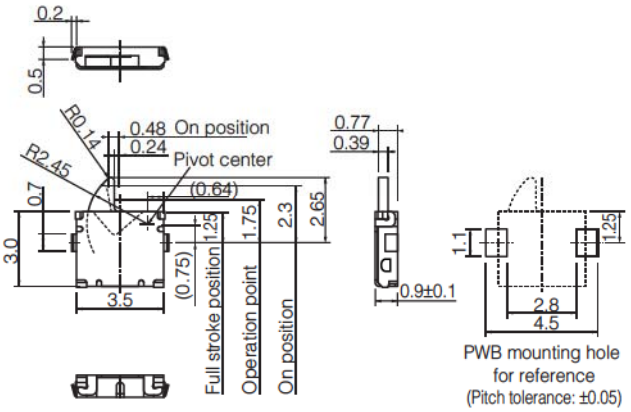

No. 2 Nomal closed type
ESE58L61 J-bent terminals
1-pole 1-throw

with Boss
ESE58L61B

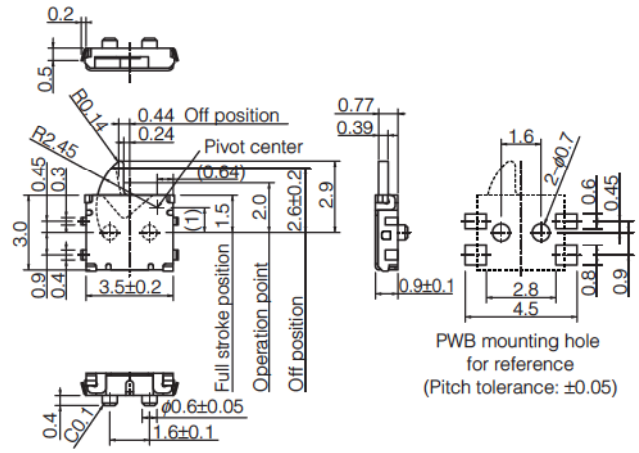

without Boss
ESE58L61A

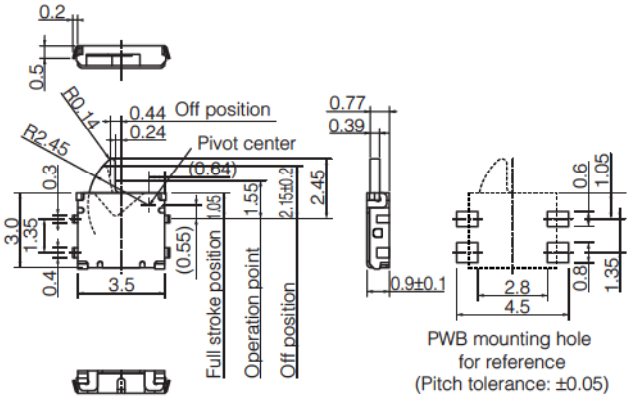

No. 3 Nomal open type
ESE58R11 J-bent terminals
1-pole 1-throw

with Boss
ESE58R11B

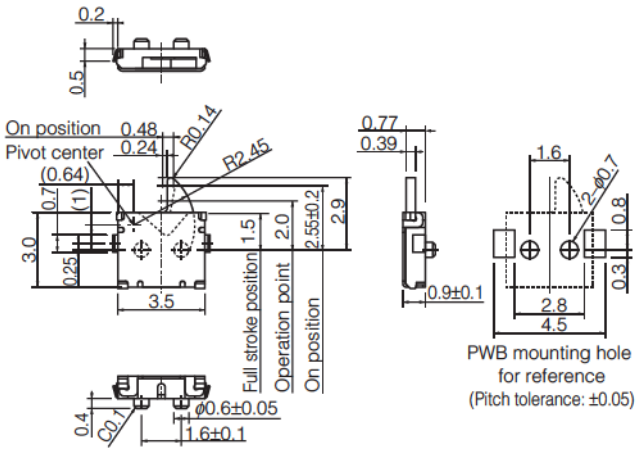

without Boss
ESE58R11A

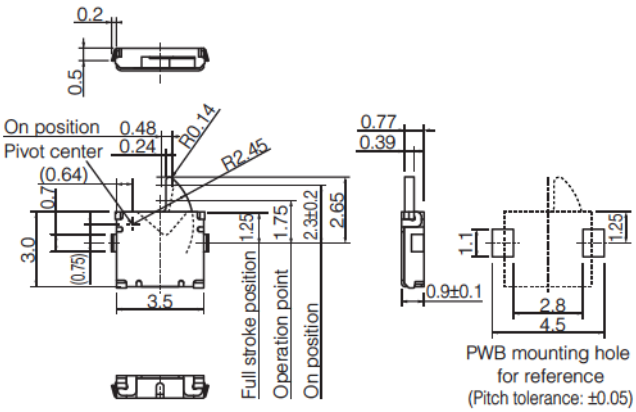

Design and specifications are each subject to change without notice. Ask factory for the current technical specifications before purchase and/or use.
Should a safety concern arise regarding this product, please be sure to contact us immediately.

■ Dimensions in mm (not to scale)

No. 4

Nomal closed type
ESE58R61 J-bent terminals
1-pole 1-throw

with Boss
ESE58R61B

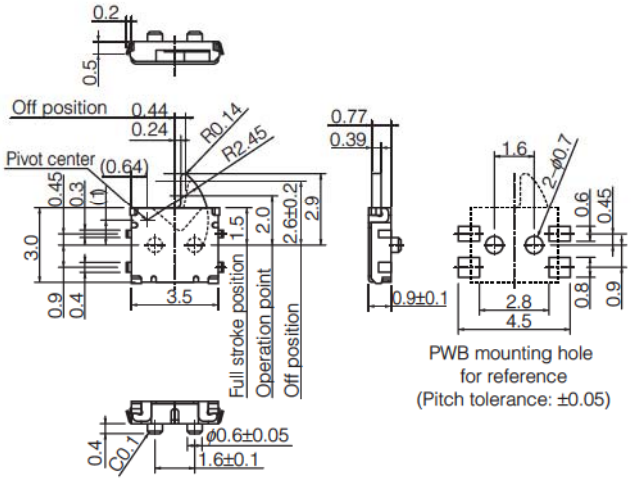

without Boss
ESE58R61A

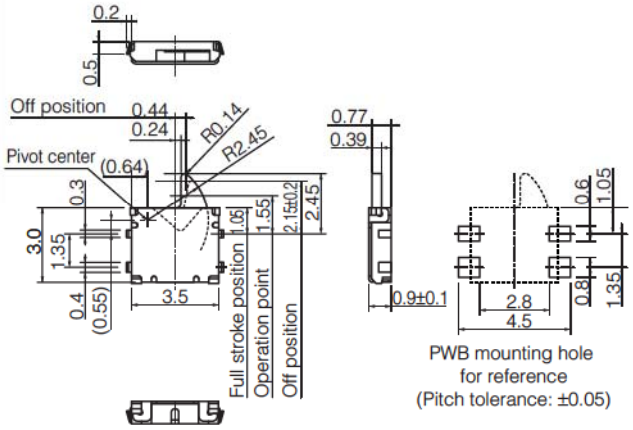

■ Circuit Diagram

Normal open type
1-pole 1-throw (N . O)
Type ESE58L

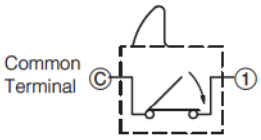

Type ESE58R

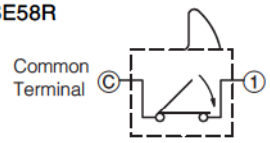

Normal closed type
1-pole 1-throw (N . C)
Type ESE58L

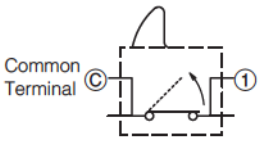

Type ESE58R

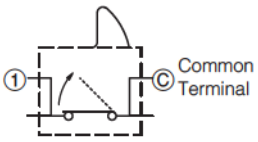

■ Packaging Specifications
Standard Reel Dimensions in mm (not to scale)

Taping Reel

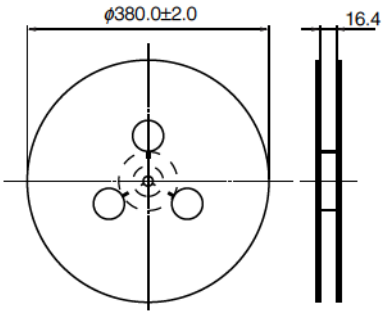

Embossed Carrier Taping

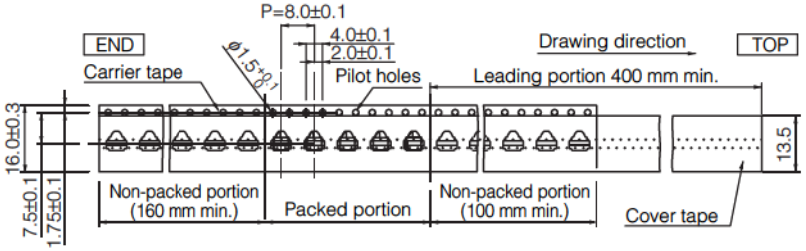

Design and specifications are each subject to change without notice. Ask factory for the current technical specifications before purchase and/or use.
Should a safety concern arise regarding this product, please be sure to contact us immediately.

1VR Detector Switches

Type: **ESE16**

■ Features

- External Dimensions: 2.2 mm×3.35 mm (Height:1.5 mm)
- Light operating force: 250 mN or less
- Auto mounting supported: Can be mounted by standard nozzles

■ Recommended Applications

- Detection of media in portable electronic equipment (Mobile phones / Digital still cameras / Camcorders)

■ Explanation of Part Numbers

1	2	3	4	5	6	7	8	9
E	S	E	1	6				
Product Code					Type	Design No		

■ Specifications

Rating	50 μA 3 Vdc to 10 mA 5 Vdc (Resistive load)
Contact Resistance	500 mΩ max. (Initial)
Insulation Resistance	10 MΩ max. (100 Vdc)
Dielectric Withstanding Voltage	100 Vac for 1 minute
Operating Force	250 mN max.
Mounting Height	1.5 mm
Poles and Throws	1-pole 1-throw
Full Travel (Pushing distance)	1.5 mm (1.0 mm)
Operating Life	50000 cycles min.
Temperature Range	–10 °C to +60 °C
Heat Resistance	+70 °C for 96 hours
Low Temperature Resistance	–25 °C for 96 hours
Humidity Resistance	+40 °C 90 % to 95 % RH for 96 hours
Minimum Quantity/Packing Unit	4000 pcs. Embossed Taping (Reel Pack)
Quantity/Carton	24000 pcs.

Design and specifications are each subject to change without notice. Ask factory for the current technical specifications before purchase and/or use.
Should a safety concern arise regarding this product, please be sure to contact us immediately.

■ Dimensions in mm (not to scale)

ESE16
1-pole 1-throw

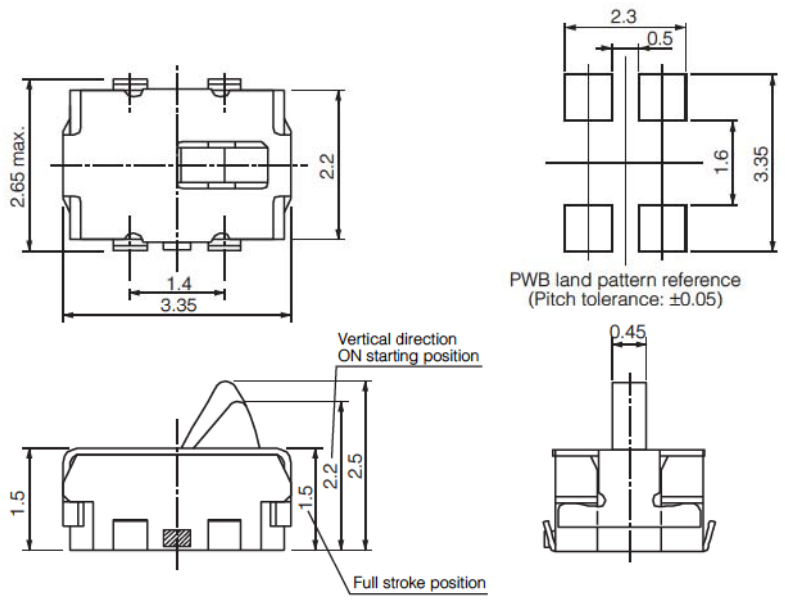

■ Circuit Diagram

1-pole 1-throw (N.O)

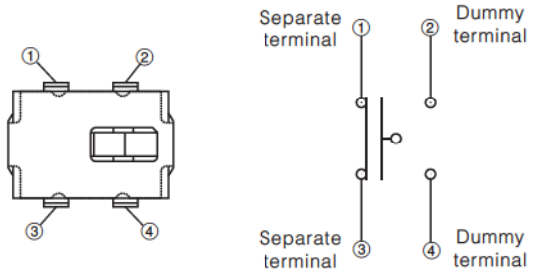

■ Packaging Specifications
Standard Reel Dimensions in mm (not to scale)

Taping Reel

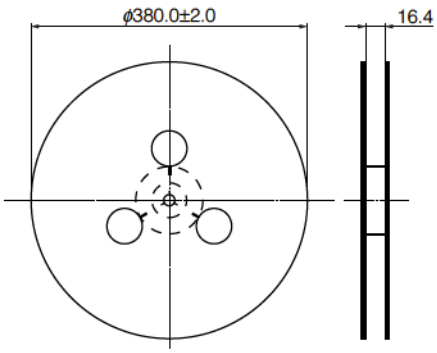

Embossed Carrier Taping

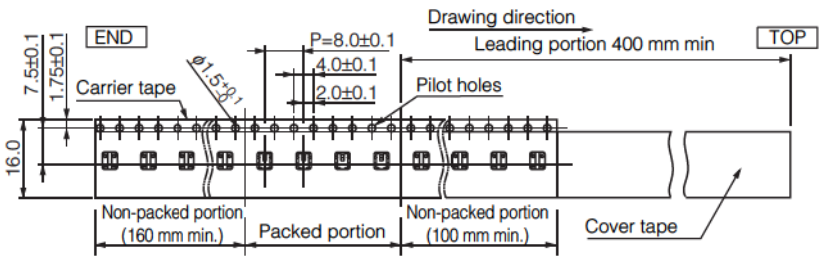

Design and specifications are each subject to change without notice. Ask factory for the current technical specifications before purchase and/or use.
Should a safety concern arise regarding this product, please be sure to contact us immediately.

1VL Detector Switches

Type: **ESE13**

■ Features

- Thin type : Height=1.2 mm
- Highly reliable contact
- SMD type (Embossed taping, Reflow soldering)

■ Recommended Applications

- Detection of media in portable electronic equipment (Mobile phones / Digital still cameras / Camcorders)

■ Explanation of Part Numbers

1	2	3	4	5	6	7	8	9
E	S	E	1	3				

Product Code

Design No

6th	Type
H	From under to top type
V	From top to under type

9th	Positioning	Terminal Type
A	Without Boss	J-bent Type
B	With Boss	J-bent Type
C	Without Boss	Straight Type
D	With Boss	Straight Type

■ Specifications

Rating		50 μA 3 Vdc to 10 mA 5 Vdc (Resistive load)
Contact Resistance		500 mΩ max. (Initial)
Insulation Resistance		100 MΩ min. (100 Vdc)
Dielectric Withstanding Voltage		100 Vac for 1 minute
Operating Force		300 mN max.
Mounting Height		1.2 mm
Poles and Throws		1-pole 1-throw
Full Travel (Pushing distance)		Type V : 2.15 mm (2.15 mm) Type H : 3.05 mm (2.15 mm)
Operating Life		50000 cycles min.
Temperature Range		–10 °C to +60 °C
Heat Resistance		+70 °C for 96 hours
Low Temperature Resistance		–25 °C for 96 hours
Humidity Resistance		+40 °C 90 % to 95 % RH for 96 hours
Minimum Quantity/Packing Unit	ESE13H	5000 pcs. Embossed Taping (Reel Pack)
	ESE13V	3000 pcs. Embossed Taping (Reel Pack)
Quantity/Carton	ESE13H	30000 pcs.
	ESE13V	18000 pcs.

Design and specifications are each subject to change without notice. Ask factory for the current technical specifications before purchase and/or use.
Should a safety concern arise regarding this product, please be sure to contact us immediately.

00 Oct. 2012

■ Dimensions in mm (not to scale)

No. 1 ESE13V J-bent terminals
1-pole 1-throw

With boss
ESE13V01B

Without boss
ESE13V01A

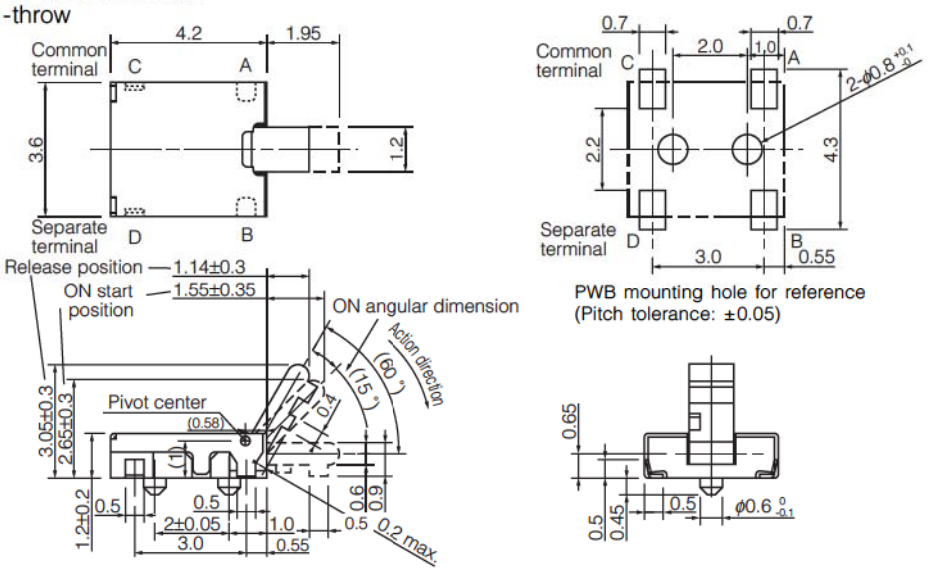

No. 2 ESE13V Straight terminals
1-pole 1-throw

With boss
ESE13V01D

Without boss
ESE13V01C

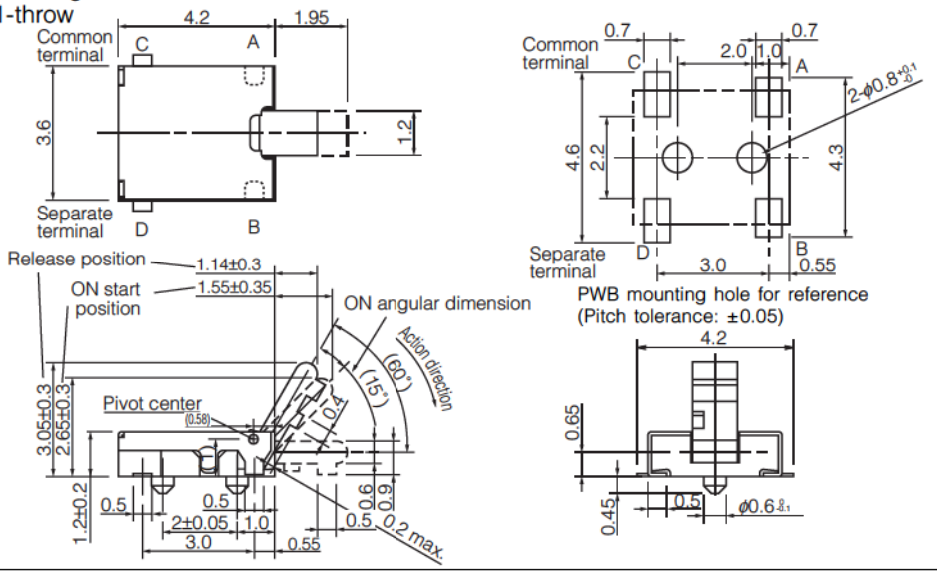

No. 3 ESE13H J-bent terminals
1-pole 1-throw

With boss
ESE13H01B

Without boss
ESE13H01A

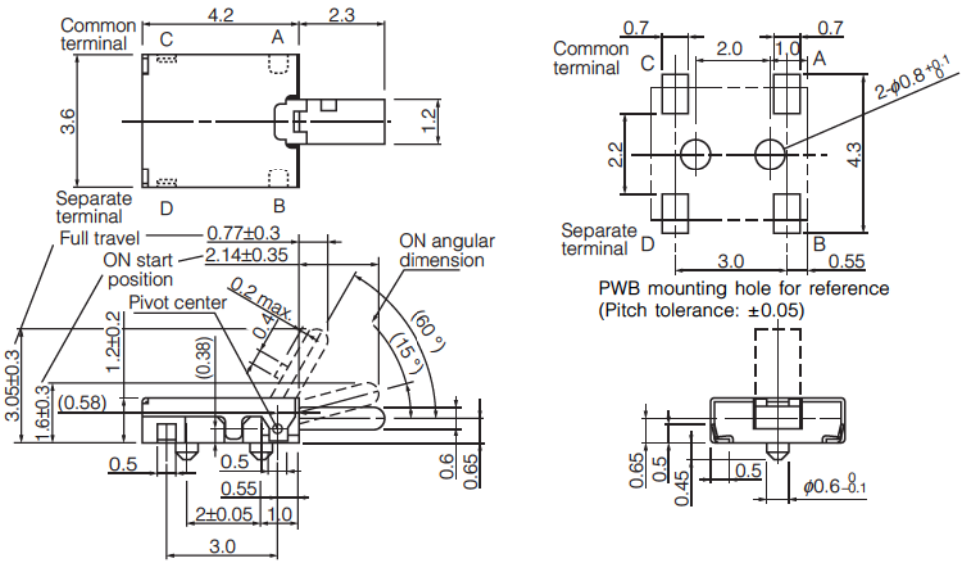

Design and specifications are each subject to change without notice. Ask factory for the current technical specifications before purchase and/or use.
Should a safety concern arise regarding this product, please be sure to contact us immediately.

■ Dimensions in mm (not to scale)

No. 4 | ESE13H Straight terminals
1-pole 1-throw

With boss
ESE13H01D

Without boss
ESE13H01C

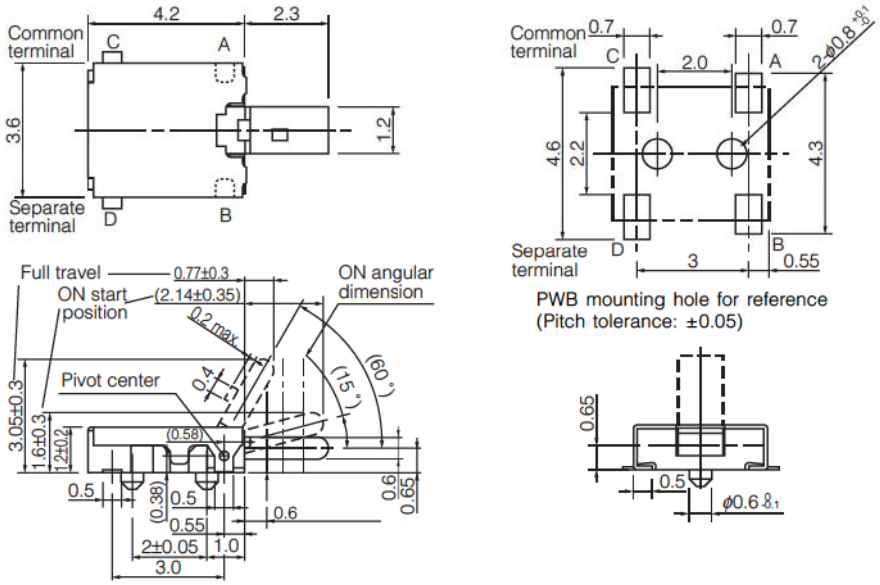

■ Circuit Diagram

1-pole 1-throw (N.O)

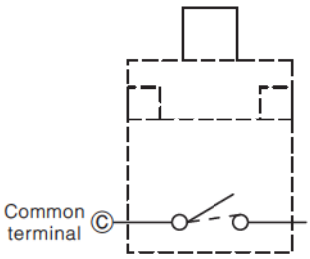

■ Packaging Specifications
Standard Reel Dimensions in mm (not to scale)

Taping Reel

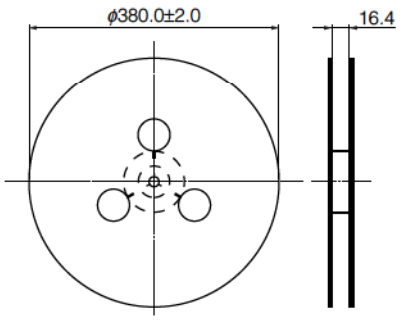

Embossed Carrier Taping

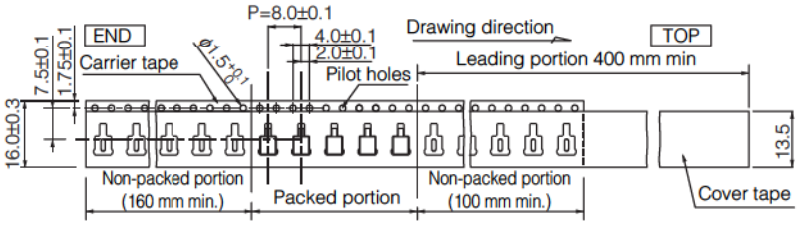

Design and specifications are each subject to change without notice. Ask factory for the current technical specifications before purchase and/or use.
Should a safety concern arise regarding this product, please be sure to contact us immediately.

1HL Detector Switches

Type: **ESE18**

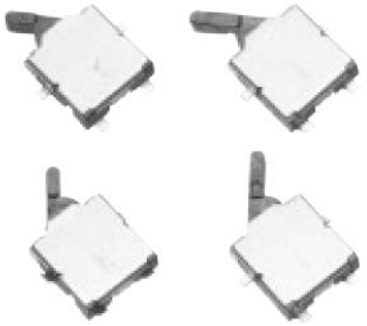

■ Features

- Thin body: 1.2 mm
- Circuit type: Normally-open and normally-closed types are available.
- Travel: Standard stroke type: 1.5 mm
  Long stroke type: 2.15 mm
- Surface mounted type: Packed with embossed tape. Supports reflow soldering.

■ Recommended Applications

- Detection of media in portable electronic equipment (Mobile phones/CD-ROM/DVD players, Digital still cameras)

■ Explanation of Part Numbers

1	2	3	4	5	6	7	8	9
E	S	E	1	8				

Product Code — Design No

6th	Type
L	Left-side operation type
R	Right-side operation type

■ Specifications

Rating	50 μA 3 Vdc to 10 mA 5 Vdc (Resistive load)
Contact Resistance	500 mΩ max. (Initial)
Insulation Resistance	100 MΩ min. (100 Vdc)
Dielectric Withstanding Voltage	100 Vac for 1 minute
Operating Force	300 mN max.
Mounting Height	1.2 mm
Poles and Throws	1-pole 1-throw
Full Travel (Pushing distance)	· Standard stroke type With boss : 1.4 mm (1.5 mm) Without boss : 2.1 mm (1.5 mm) · Long stroke type With boss : 1.4 mm (2.15 mm) Without boss : 2.1 mm (2.15 mm)
Operating Life	50000 cycles min.
Temperature Range	–10 °C to +60 °C
Heat Resistance	+70 °C for 96 hours
Low Temperature Resistance	–25 °C for 96 hours
Humidity Resistance	+40 °C 90 % to 95 % RH for 96 hours
Minimum Quantity/Packing Unit	5000 pcs. Embossed Taping (Reel Pack)
Quantity/Carton	30000 pcs.

Design and specifications are each subject to change without notice. Ask factory for the current technical specifications before purchase and/or use.
Should a safety concern arise regarding this product, please be sure to contact us immediately.

■ Dimensions in mm (not to scale)

No. 1

Standard stroke type
ESE18L J-bent terminals
1-pole 1-throw

Normal open with Boss **ESE18L11B**

Normal open without Boss **ESE18L11A**

Normal closed with Boss **ESE18L61B**

Normal closed without Boss **ESE18L61A**

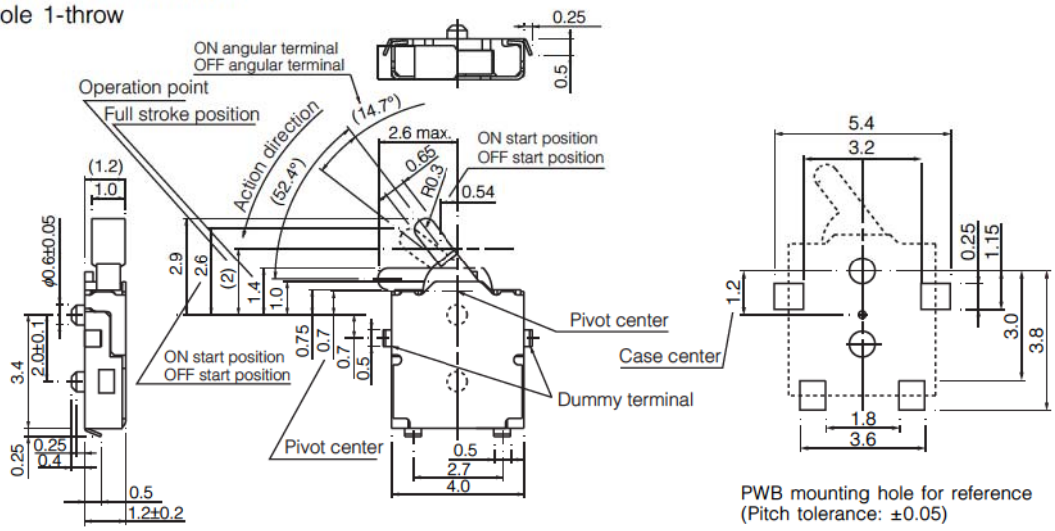

No. 2

Standard stroke type
ESE18L Straight terminals
1-pole 1-throw

Normal open with Boss **ESE18L11D**

Normal open without Boss **ESE18L11C**

Normal closed with Boss **ESE18L61D**

Normal closed without Boss **ESE18L61C**

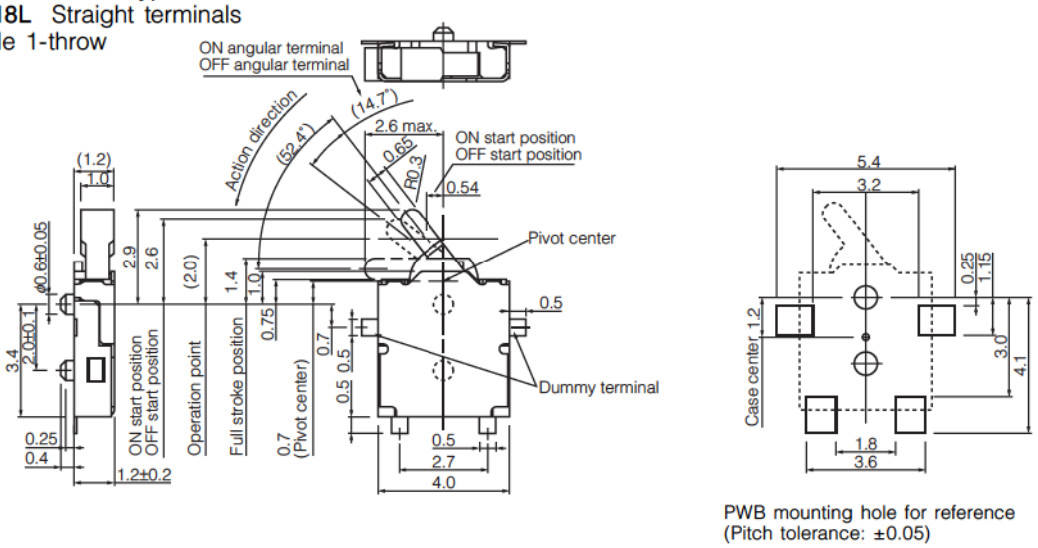

No. 3

Long stroke type
ESE18L J-bent terminals
1-pole 1-throw

Normal open with Boss **ESE18L12B**

Normal open without Boss **ESE18L12A**

Normal closed with Boss **ESE18L62B**

Normal closed without Boss **ESE18L62A**

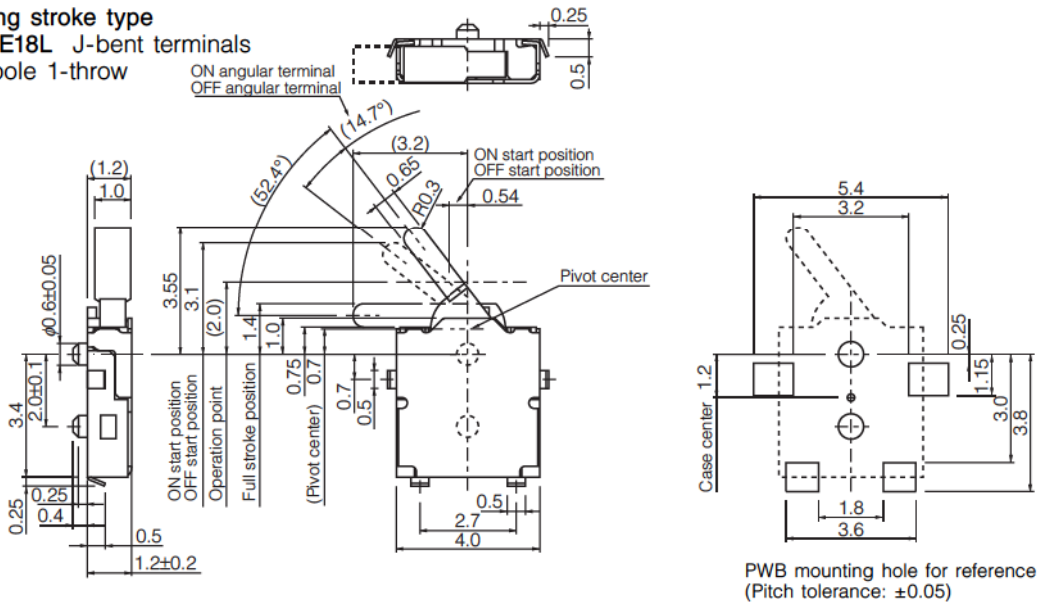

Design and specifications are each subject to change without notice. Ask factory for the current technical specifications before purchase and/or use.
Should a safety concern arise regarding this product, please be sure to contact us immediately.

■ Dimensions in mm (not to scale)

No. 4

Long stroke type
ESE18L Straight terminals
1-pole 1-throw

Normal open with Boss
ESE18L12D

Normal open without Boss
ESE18L12C

Normal closed with Boss
ESE18L62D

Normal closed without Boss
ESE18L62C

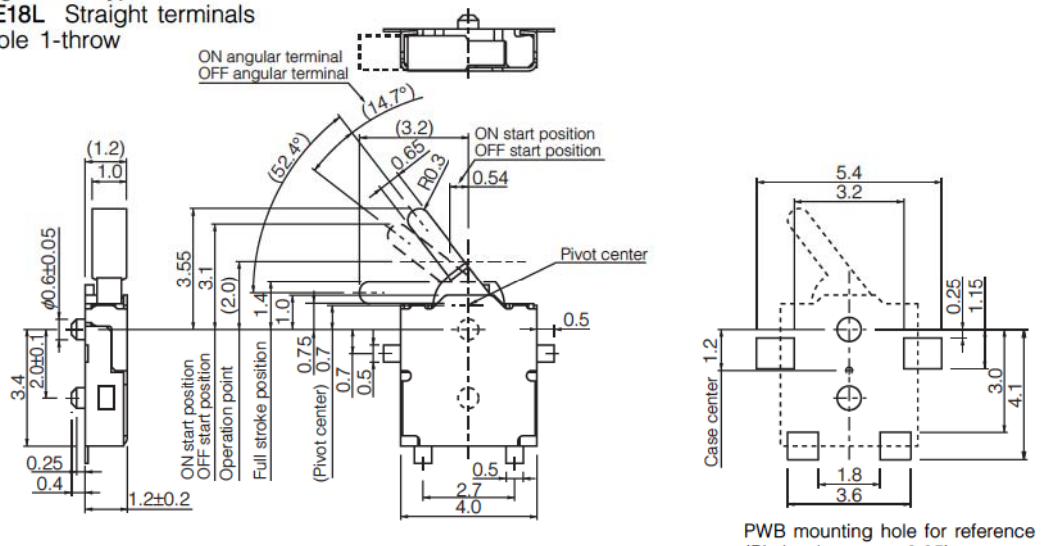

No. 5

Standard stroke type
ESE18R J-bent terminals
1-pole 1-throw

Normal open with Boss
ESE18R11B

Normal open without Boss
ESE18R11A

Normal closed with Boss
ESE18R61B

Normal closed without Boss
ESE18R61A

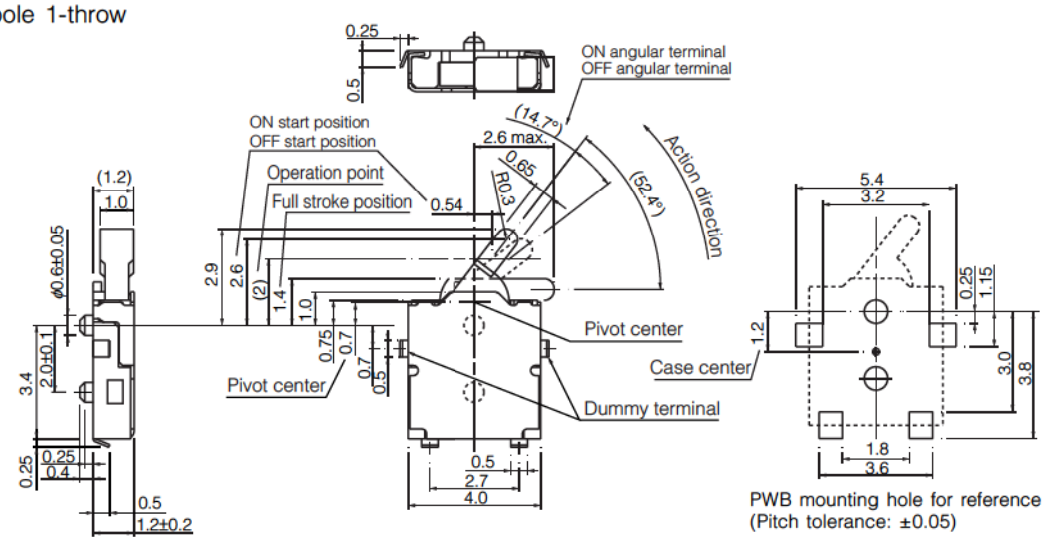

No. 6

Standard stroke type
ESE18R Straight terminals
1-pole 1-throw

Normal open with Boss
ESE18R11D

Normal open without Boss
ESE18R11C

Normal closed with Boss
ESE18R61D

Normal closed without Boss
ESE18R61C

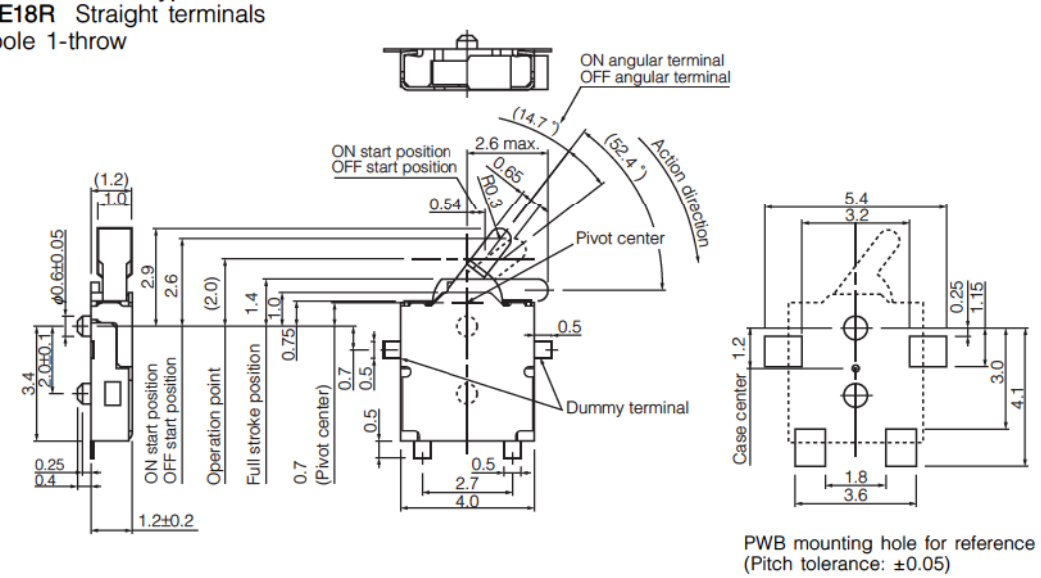

Design and specifications are each subject to change without notice. Ask factory for the current technical specifications before purchase and/or use.
Should a safety concern arise regarding this product, please be sure to contact us immediately.

■ Dimensions in mm (not to scale)

No. 7

Long stroke type
ESE18R J-bent terminals
1-pole 1-throw

Normal open with Boss
ESE18R12B

Normal open without Boss
ESE18R12A

Normal closed with Boss
ESE18R62B

Normal closed without Boss
ESE18R62A

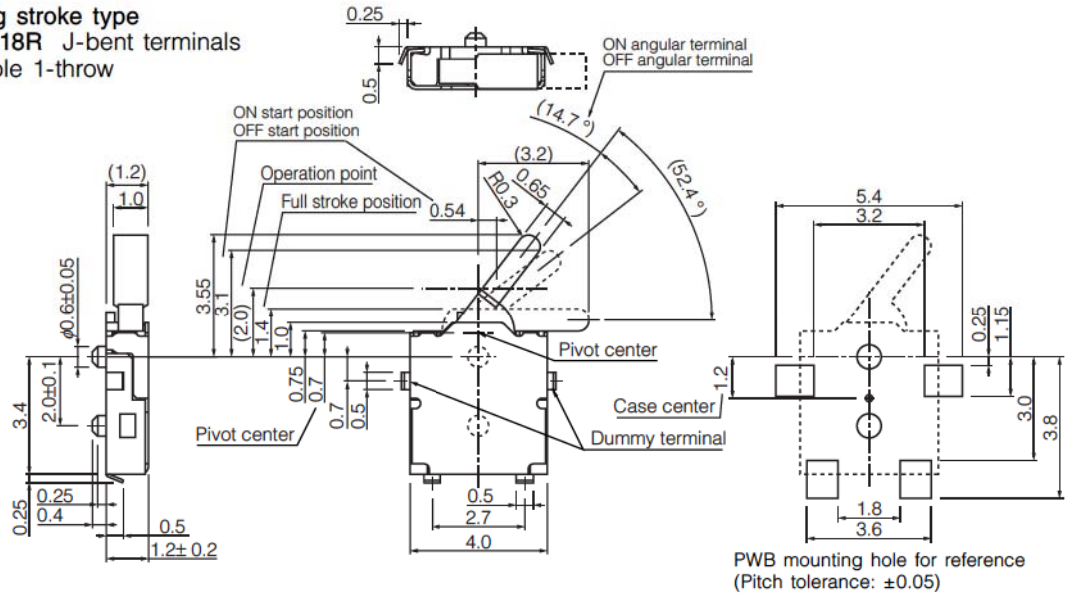

No. 8

Long stroke type
ESE18R Straight terminals
1-pole 1-throw

Normal open with Boss
ESE18R12D

Normal open without Boss
ESE18R12C

Normal closed with Boss
ESE18R62D

Normal closed without Boss
ESE18R62C

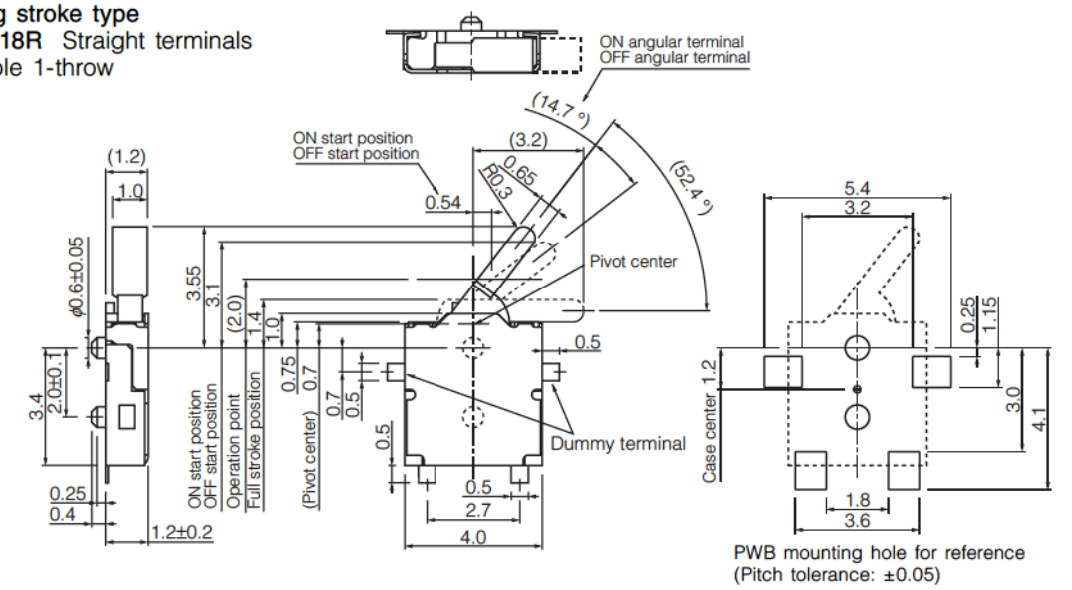

■ Circuit Diagram

Normal open type
1-pole 1-throw (N . O)
Type ESE18L

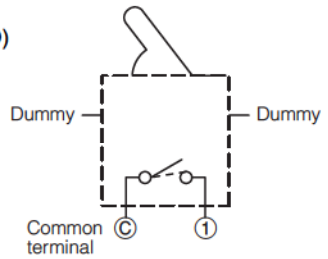

Type ESE18R

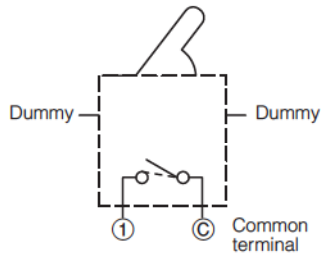

Normal closed type
1-pole 1-throw (N . C)
Type ESE18L

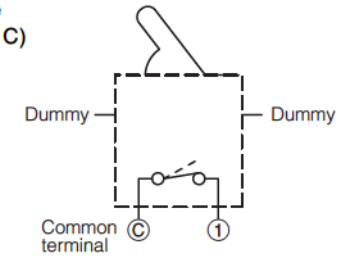

Type ESE18R

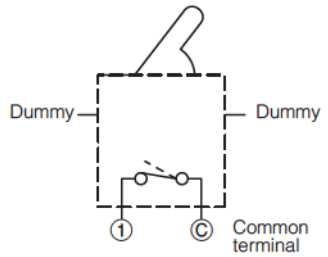

Design and specifications are each subject to change without notice. Ask factory for the current technical specifications before purchase and/or use.
Should a safety concern arise regarding this product, please be sure to contact us immediately.

■ Packaging Specifications
Standard Reel Dimensions in mm (not to scale)

Standard stroke type
Long stroke type

Taping Reel

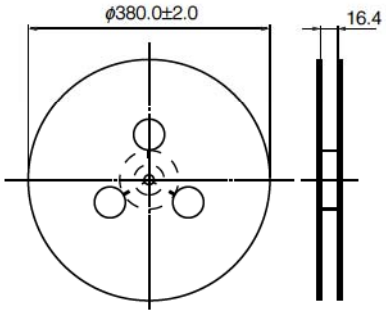

Embossed Carrier Taping

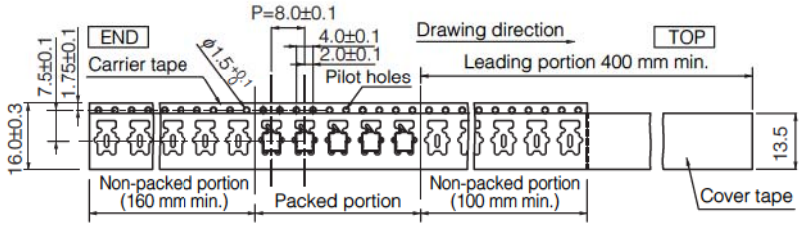

Design and specifications are each subject to change without notice. Ask factory for the current technical specifications before purchase and/or use.
Should a safety concern arise regarding this product, please be sure to contact us immediately.

2HL Detector Switches

Type: **ESE31**

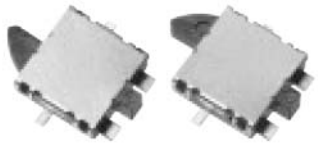

■ Features

- Increased the mounting strength Mounting strength: 80 N
- Decreased the profile of the switch body Height: 1.7 mm
- Increased the contact reliability and lifespan.
  Lifespan: 100,000 operations or more

■ Recommended Applications

- Detection of media in portable electronic equipment

■ Explanation of Part Numbers

1	2	3	4	5	6	7	8	9
E	S	E	3	1				

Product Code — Design No

6th	Type
L	Left-side operation type
R	Right-side operation type

■ Specifications

Rating	50 µA 3 Vdc to 10 mA 5 Vdc (Resistive load)
Contact Resistance	500 mΩ max. (Initial)
Insulation Resistance	100 MΩ min. (100 Vdc)
Dielectric Withstanding Voltage	100 Vac for 1 minute
Operating Force	390 mN max.
Mounting Height	1.7 mm
Poles and Throws	1-pole 1-throw
Full Travel (Pushing distance)	3.2 mm (2.15 mm)
Operating Life	50000 cycles min.
Temperature Range	−10 °C to +70 °C
Heat Resistance	+85 °C for 96 hours
Low Temperature Resistance	−40 °C for 96 hours
Humidity Resistance	+60 °C 90 % to 95 % RH for 96 hours
Minimum Quantity/Packing Unit	2500 pcs. Embossed Taping (Reel Pack)
Quantity/Carton	15000 pcs.

Design and specifications are each subject to change without notice. Ask factory for the current technical specifications before purchase and/or use.
Should a safety concern arise regarding this product, please be sure to contact us immediately.

00 Oct. 2012

■ Dimensions in mm (not to scale)

No. 1 ESE31L11T

1-pole 1-throw

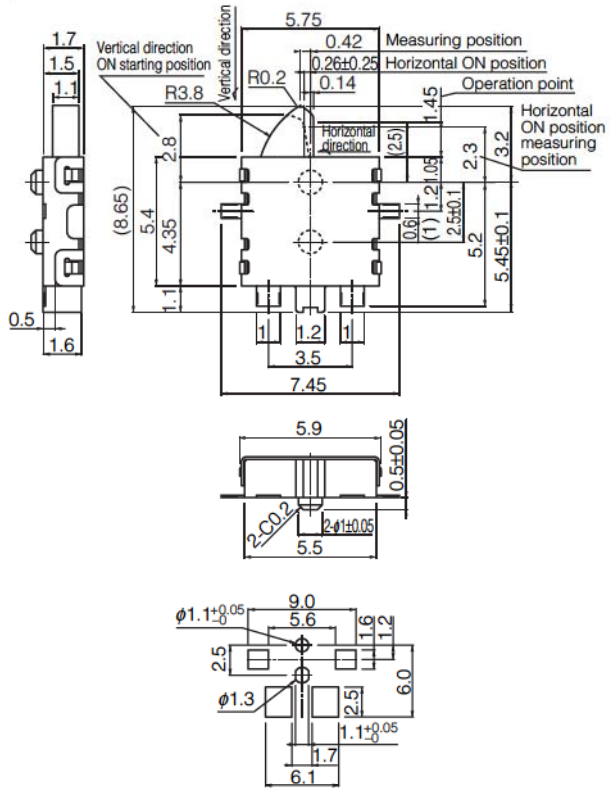

PWB mounting hole for reference

No. 2 ESE31R11T

1-pole 1-throw

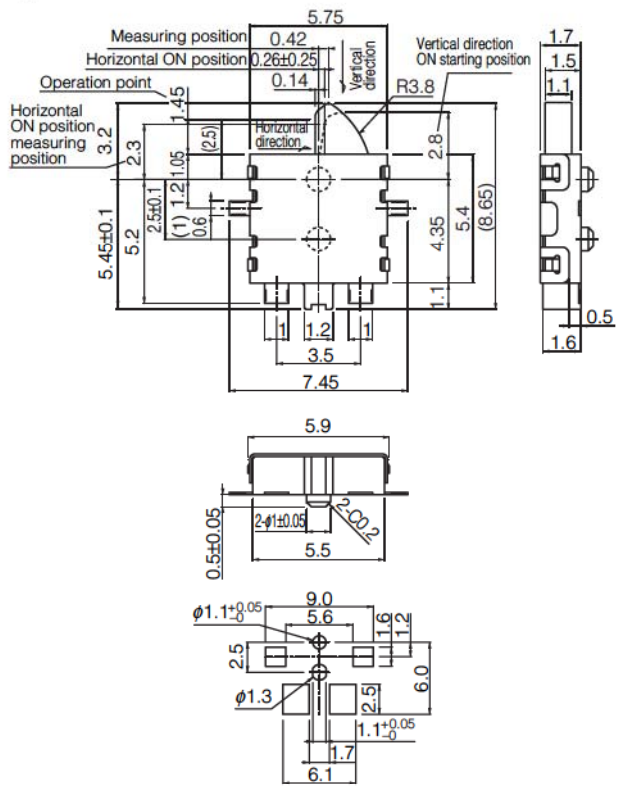

PWB mounting hole for reference

■ Circuit Diagram

1-pole 1-throw (N . O)

ESE31L11T

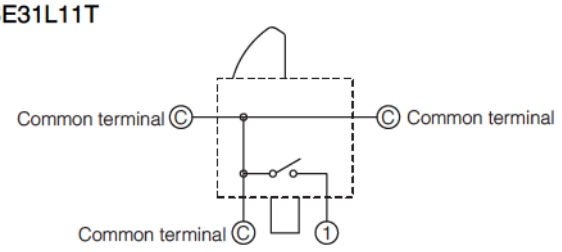

ESE31R11T

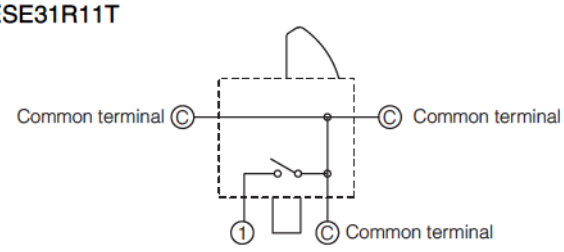

■ Packaging Specifications

Standard Reel Dimensions in mm (not to scale)

Taping Reel

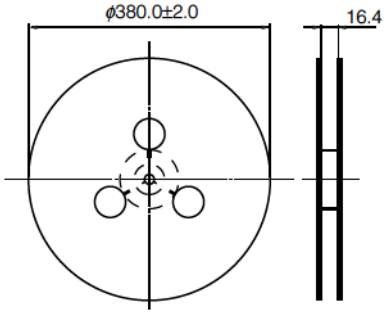

Embossed Carrier Taping

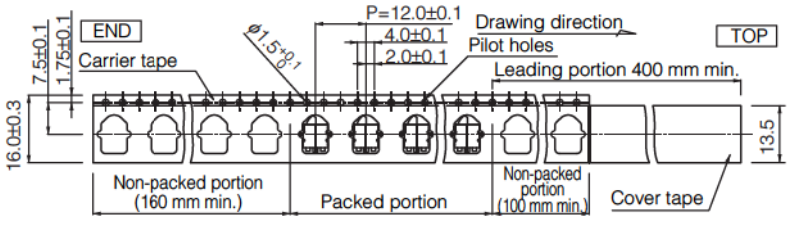

Design and specifications are each subject to change without notice. Ask factory for the current technical specifications before purchase and/or use.
Should a safety concern arise regarding this product, please be sure to contact us immediately.

2N Detector Switches

Type: **ESE22**

■ Features

- Can be operated with different actuation angles (horizontally and vertically)
- Reflow soldering
- Light operating force

■ Recommended Applications

- Detection of media in portable electronic equipment

■ Explanation of Part Numbers

1	2	3	4	5	6	7	8	9
E	S	E	2	2				
Product Code			Type		Style		Design No.	

■ Specifications

Rating	50 µA 3 Vdc to 10 mA 5 Vdc (Resistive load)
Contact Resistance	500 mΩ max. (Initial)
Insulation Resistance	100 MΩ min. (100 Vdc)
Dielectric Withstanding Voltage	100 Vac for 1 minute
Operating Force	300 mN max.
Mounting Height	· Type MV 4.1 mm · Type MH 2.1 mm · Type MH with Frame 2.85 mm
Poles and Throws	1-pole 1-throw
Full Travel (Pushing distance)	· Type MV 4.25 mm(2.05 mm) · Type MH 1.2 mm(2.0 mm) · Type MH with Frame 0.6 mm(2.0 mm)
Operating Life	50000 cycles min.
Temperature Range	–10 °C to +70 °C
Heat Resistance	+80 °C for 96 hours
Low Temperature Resistance	–25 °C for 96 hours
Humidity Resistance	+40 °C 90 % to 95 % RH for 96 hours
Minimum Quantity/Packing Unit	500 pcs. Polyethylene Bag (Bulk)
	· Type MV 1000 pcs. Embossed Taping (Reel Pack) · Type MH with Frame 3000 pcs. Embossed Taping (Reel Pack) · Type MH 4000 pcs. Embossed Taping (Reel Pack)
Quantity/Carton	10000 pcs. Polyethylene Bag (Bulk)
	· Type MV 6000 pcs. Embossed Taping (Reel Pack) · Type MH with Frame 18000 pcs. Embossed Taping (Reel Pack) · Type MH 24000 pcs. Embossed Taping (Reel Pack)

Design and specifications are each subject to change without notice. Ask factory for the current technical specifications before purchase and/or use.
Should a safety concern arise regarding this product, please be sure to contact us immediately.

■ Dimensions in mm (not to scale)

Type	Part Numbers	H : boss	Packaging
	ESE22MH21	0.5	Polyethylene Bag (Bulk)
	ESE22MH27	1.0	Polyethylene Bag (Bulk)
	ESE22MH22	0.5	Embossed Taping (Reel Pack)
	ESE22MH27T	1.0	Embossed Taping (Reel Pack)

No. 1 1-pole 1-throw

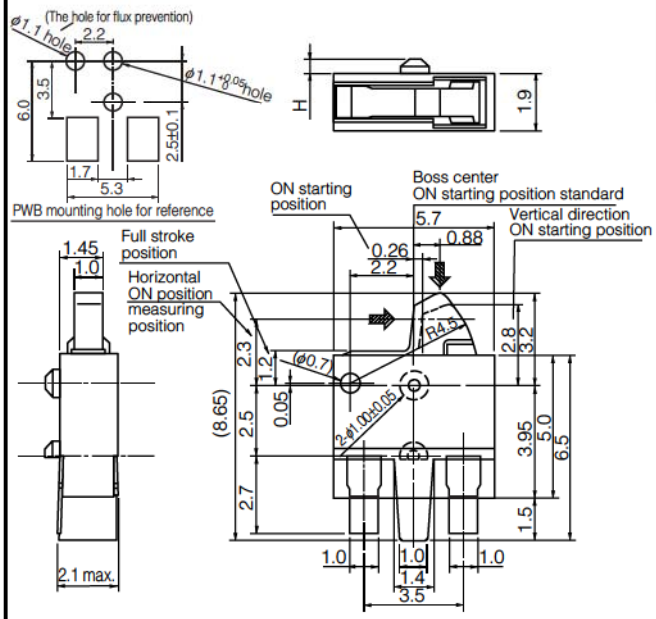

Type	Part Numbers	H : boss	Packaging
	ESE22MH23	0.5	Polyethylene Bag (Bulk)
	ESE22MH28	1.0	Polyethylene Bag (Bulk)
	ESE22MH24	0.5	Embossed Taping (Reel Pack)
	ESE22MH28T	1.0	Embossed Taping (Reel Pack)

No. 2 1-pole 1-throw

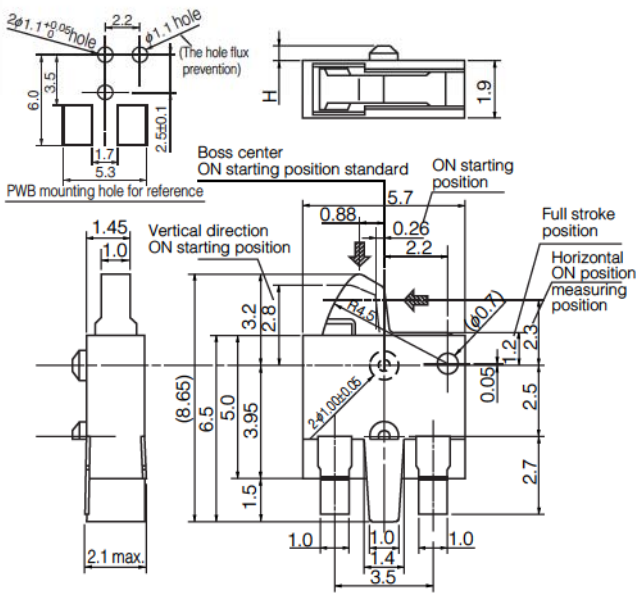

Part Numbers	Packaging
ESE22MV21	Polyethylene Bag (Bulk)
ESE22MV21T	Embossed Taping (Reel Pack)

No. 3 1-pole 1-throw

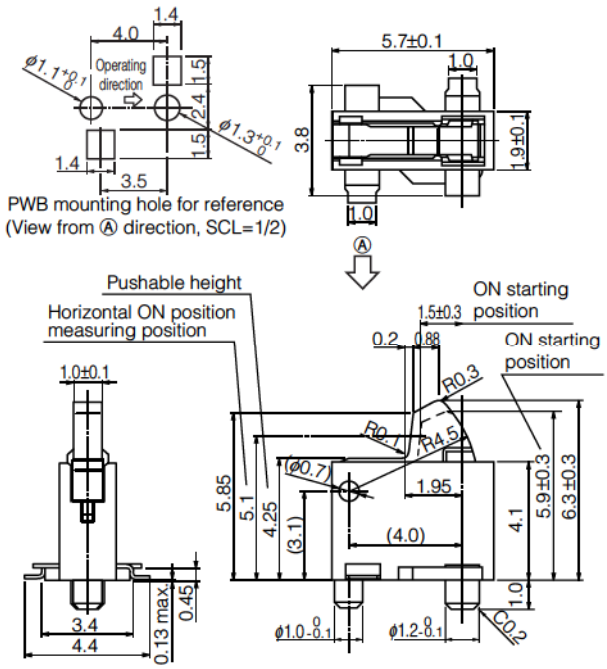

Part Numbers	Packaging
ESE22MH51	Polyethylene Bag (Bulk)
ESE22MH52	Embossed Taping (Reel Pack)

No. 4 1-pole 1-throw

With Frame Type

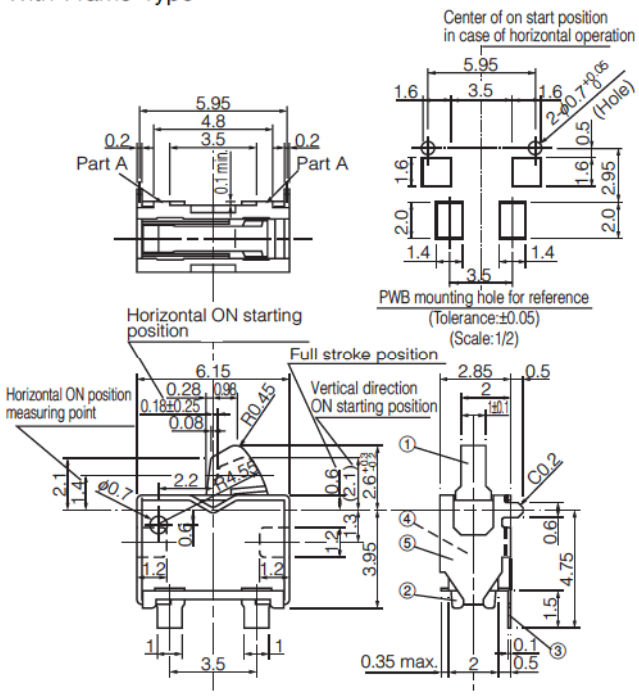

Design and specifications are each subject to change without notice. Ask factory for the current technical specifications before purchase and/or use.
Should a safety concern arise regarding this product, please be sure to contact us immediately.

■ Dimensions in mm (not to scale)

Part Numbers	Packaging
ESE22MH53	Polyethylene Bag (Bulk)
ESE22MH54	Embossed Taping (Reel Pack)

No. 5 1-pole 1-throw

With Frame Type

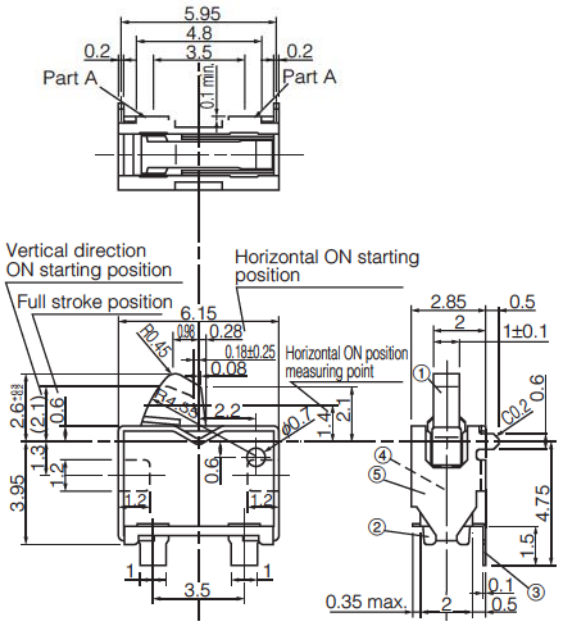

Part Numbers	Packaging
ESE22MH57	Polyethylene Bag (Bulk)

No. 6 1-pole 1-throw

Solder lug Type

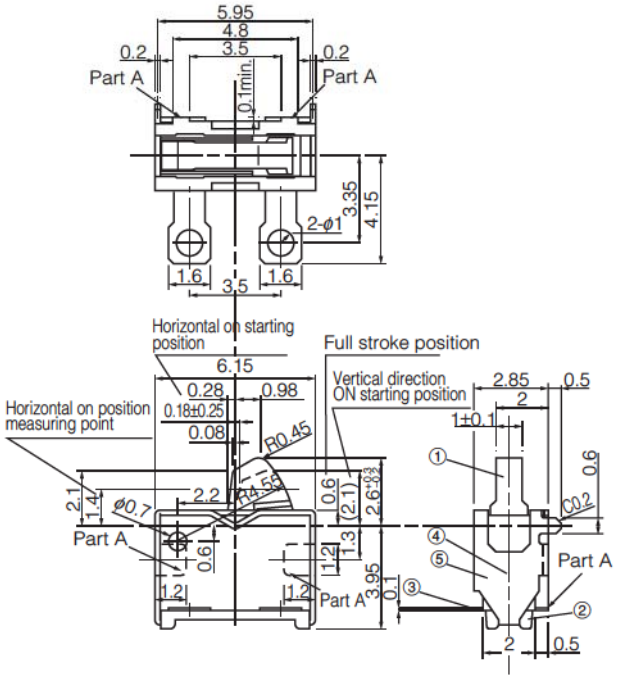

Part Numbers	Packaging
ESE22MH58	Polyethylene Bag (Bulk)

No. 7 1-pole 1-throw

Solder lug Type

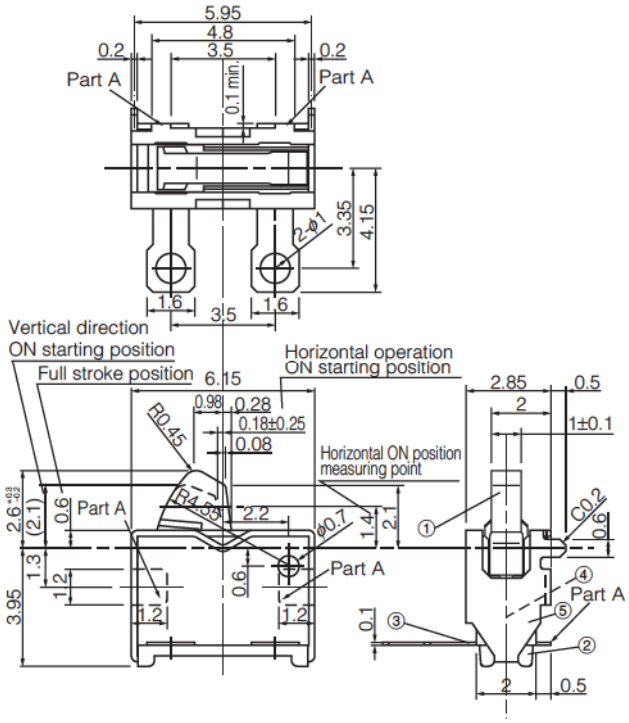

■ Circuit Diagram

1-pole 1-throw (N.O)

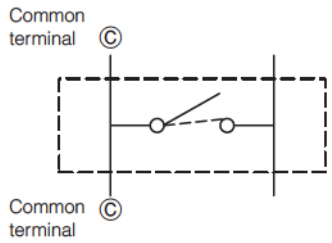

■ Packaging Specifications

Standard Reel Dimensions in mm (not to scale)

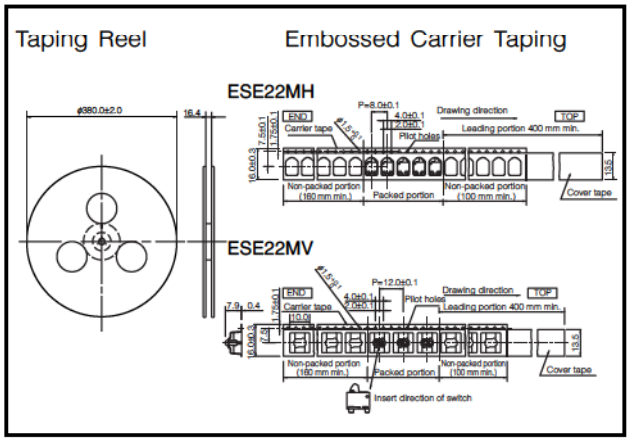

Design and specifications are each subject to change without notice. Ask factory for the current technical specifications before purchase and/or use.
Should a safety concern arise regarding this product, please be sure to contact us immediately.

5N Detector Switches

Type: **ESE11**

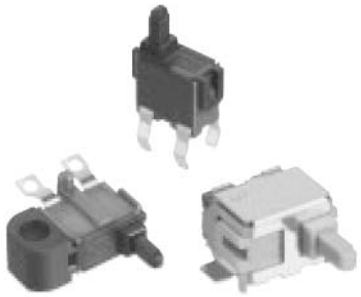

■ Features

- Wide range of customizable features including operational directions
- Light operating force
- Wide available range for reflow soldering

■ Recommended Applications

- Detection of media in portable electronic equipment

■ Explanation of Part Numbers

1	2	3	4	5	6	7	8	9
E	S	E	1	1				
Product Code			Type		Style		Design No.	

■ Specifications

Rating	50 μA 3 Vdc to 10 mA 5 Vdc (Resistive load)
Contact Resistance	500 mΩ max. (Initial)
Insulation Resistance	100 MΩ min. (100 Vdc)
Dielectric Withstanding Voltage	100 Vac for 1 minute
Operating Force	350 mN max. (Full Travel)
Mounting Height	· Type SV 4.9 mm · Type MV 4.9 mm (MV2, 7 : 5.4 mm) · Type SH 5.25 mm · Type MH 4.25 mm · Type HS, SF 3.6 mm
Poles and Throws	1-pole 1-throw
Full Travel (Pushing distance)	· Type SV 6.1 mm (2.4 mm) · Type MV 6.1 mm (2.4 mm) · Type SH 3.0 mm (2.4 mm) · Type MH 1.7 mm (2.4 mm) · Type HS, SF 6.3 mm (2.4 mm)
Operating Life	50000 cycles min.
Temperature Range	–10 °C to +70 °C
Heat Resistance	+80 °C for 96 hours
Low Temperature Resistance	–25 °C for 96 hours
Humidity Resistance	+40 °C 90 % to 95 % RH for 96 hours

Design and specifications are each subject to change without notice. Ask factory for the current technical specifications before purchase and/or use.
Should a safety concern arise regarding this product, please be sure to contact us immediately.

00 Oct. 2012

Minimum Quantity/Packing Unit	ESE11SV□ ESE11MV□ ESE11SH□ ESE11MH□ ESE11HS□ ESE11SF□	200 pcs. Polyethylene Bag (Bulk)
	ESE11MV□T (Excluding : ESE11MV2)	800 pcs. Embossed Taping (Reel Pack)
	ESE11MH□T	1500 pcs. Embossed Taping (Reel Pack)
Quantity/ Carton	ESE11SV□ ESE11MV□ ESE11SH□ ESE11MH□ ESE11HS□ ESE11SF□	10000 pcs. Polyethylene Bag (Bulk)
	ESE11MV2	8000 pcs. Polyethylene Bag (Bulk)
	ESE11MV□T (Excluding : ESE11MV2)	4800 pcs. Embossed Taping (Reel Pack)
	ESE11MH□T	9000 pcs. Embossed Taping (Reel Pack)

■ Dimensions in mm (not to scale)

Vertical Type

No. 1 **ESE11SV1** For wave soldering 1-pole 1-throw

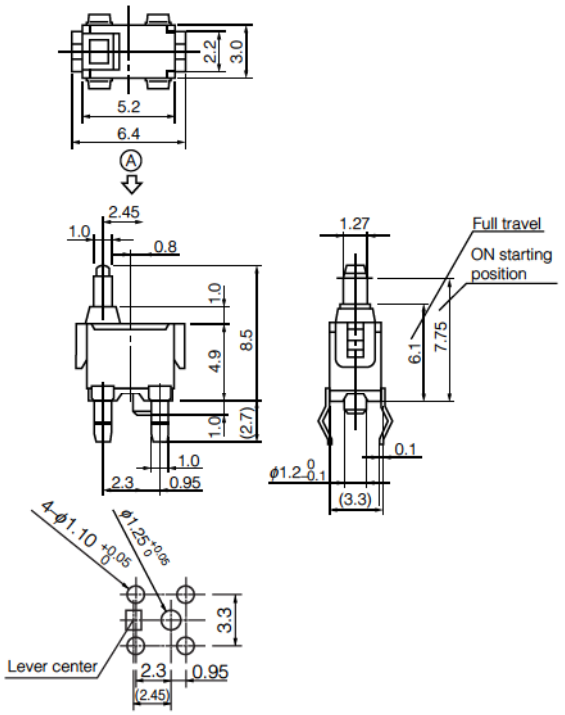

PWB mounting hole for reference
View from Ⓐ

No. 2 **ESE11MV1** For reflow soldering 1-pole 1-throw

Gold plating
ESE11MV5

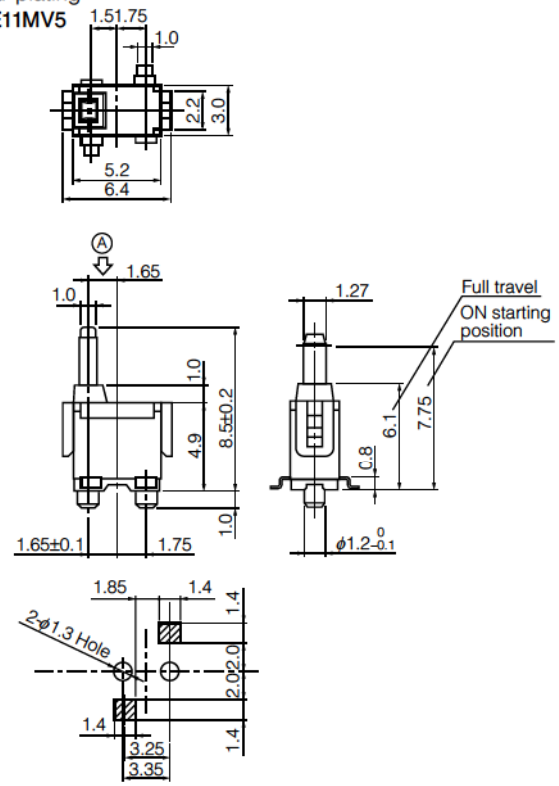

PWB mounting hole for reference
View from Ⓐ

Design and specifications are each subject to change without notice. Ask factory for the current technical specifications before purchase and/or use.
Should a safety concern arise regarding this product, please be sure to contact us immediately.

■ Dimensions in mm (not to scale)

Vertical Type

No. 3 ESE11MV9 For reflow soldering 1-pole 1-throw

Gold plating
ESE11MV13

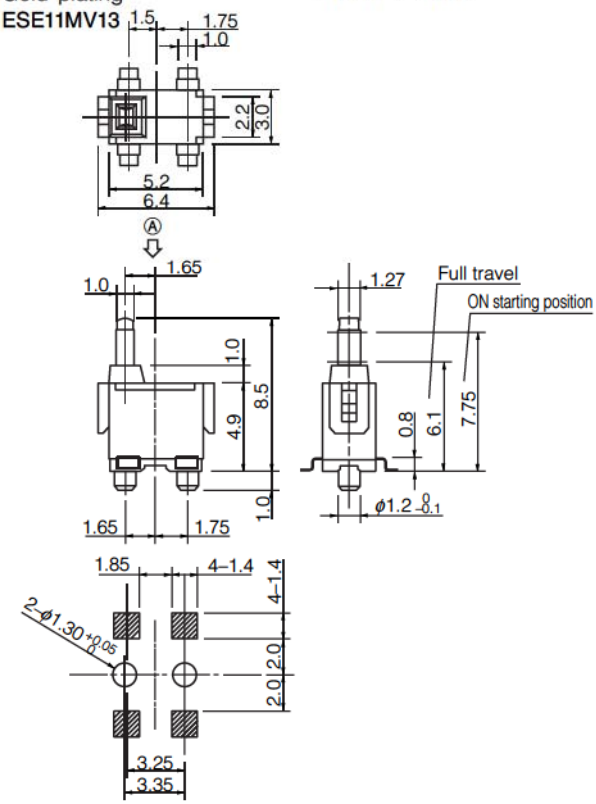

PWB mounting hole for reference
View from Ⓐ

No. 4 ESE11MV2 For reflow soldering 1-pole 1-throw

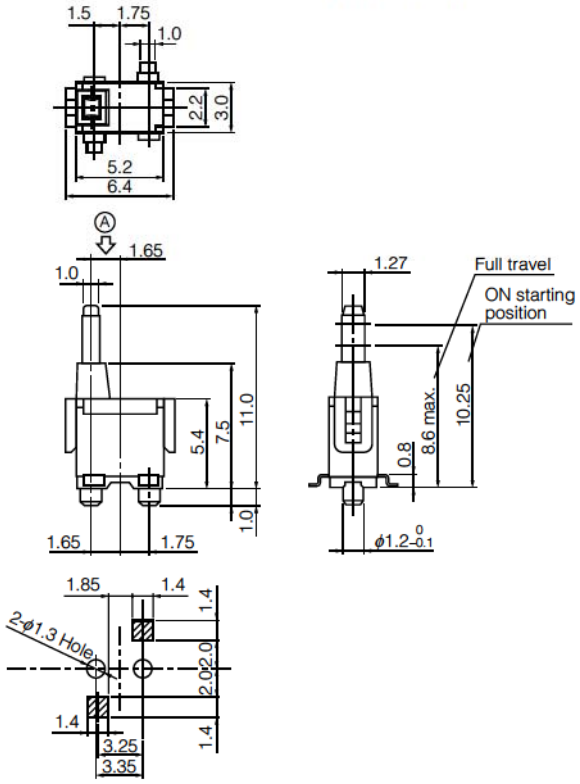

PWB mounting hole for reference
View from Ⓐ

Horizontal Type

No. 5 ESE11SH1C For reflow soldering 1-pole 1-throw

Gold plating
ESE11SH5

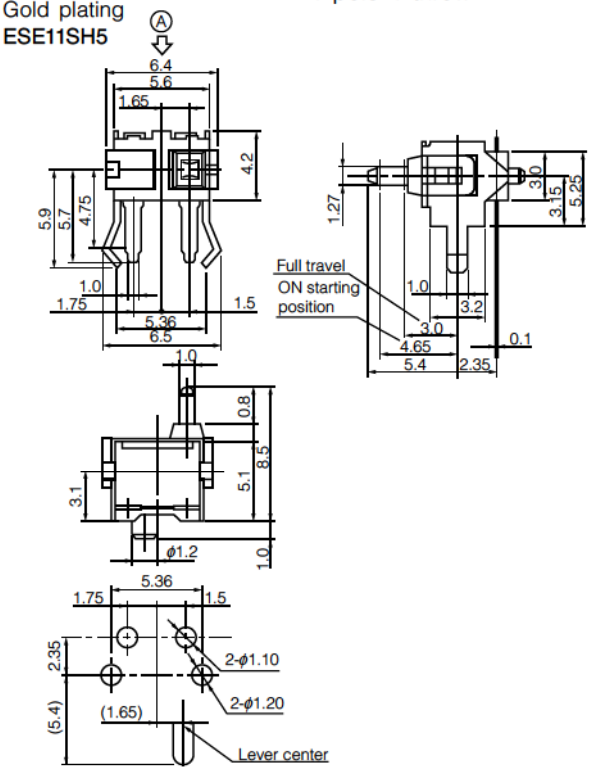

PWB mounting hole for reference
View from Ⓐ

No. 6 ESE11SH2C For wave soldering 1-pole 1-throw

Gold plating
ESE11SH6

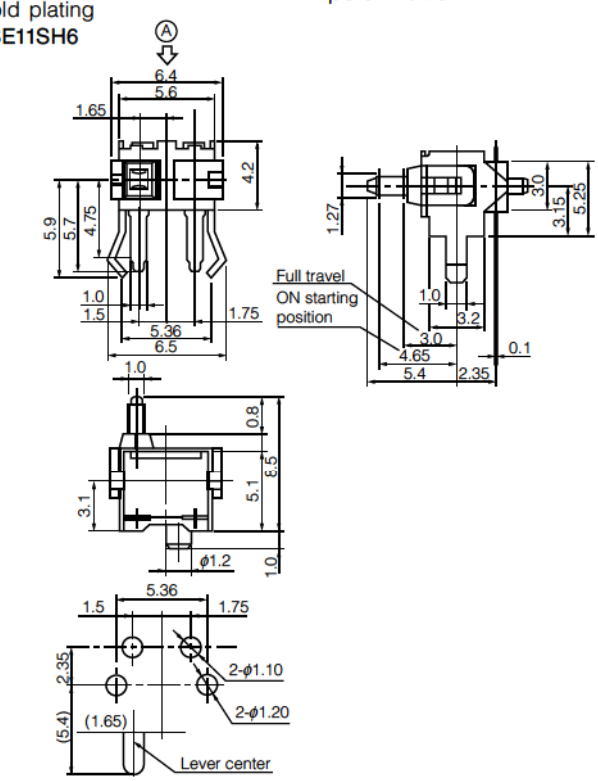

PWB mounting hole for reference
View from Ⓐ

Design and specifications are each subject to change without notice. Ask factory for the current technical specifications before purchase and/or use.
Should a safety concern arise regarding this product, please be sure to contact us immediately.

■ Dimensions in mm (not to scale)

Horizontal Type

No. 7 ESE11MH1 For wave soldering 1-pole 1-throw

Gold plating
ESE11MH3

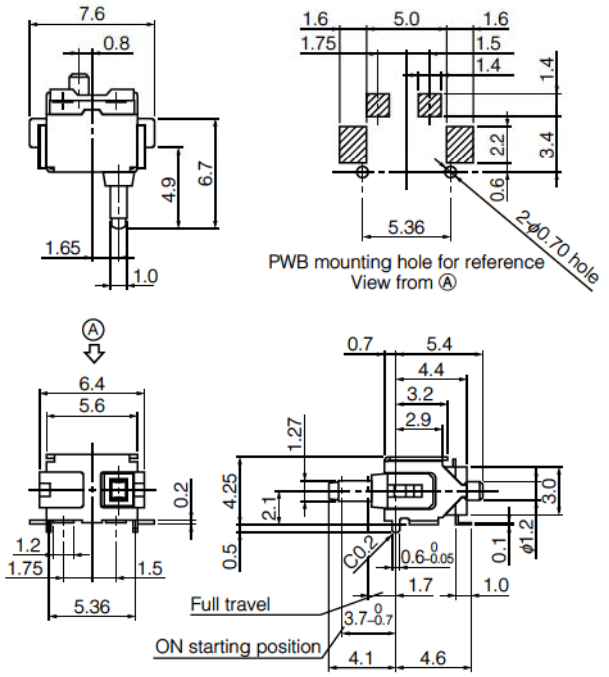

No. 8 ESE11MH2 For reflow soldering 1-pole 1-throw

Gold plating
ESE11MH4

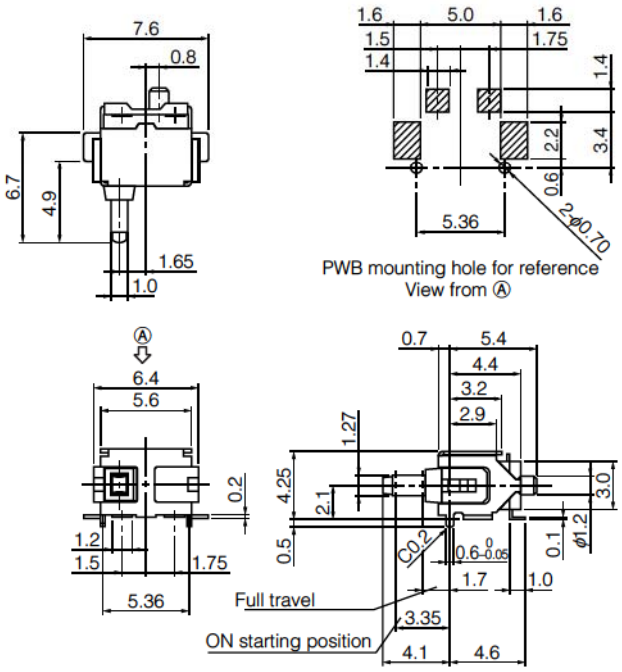

No. 9 ESE11HS1 For reflow soldering 1-pole 1-throw

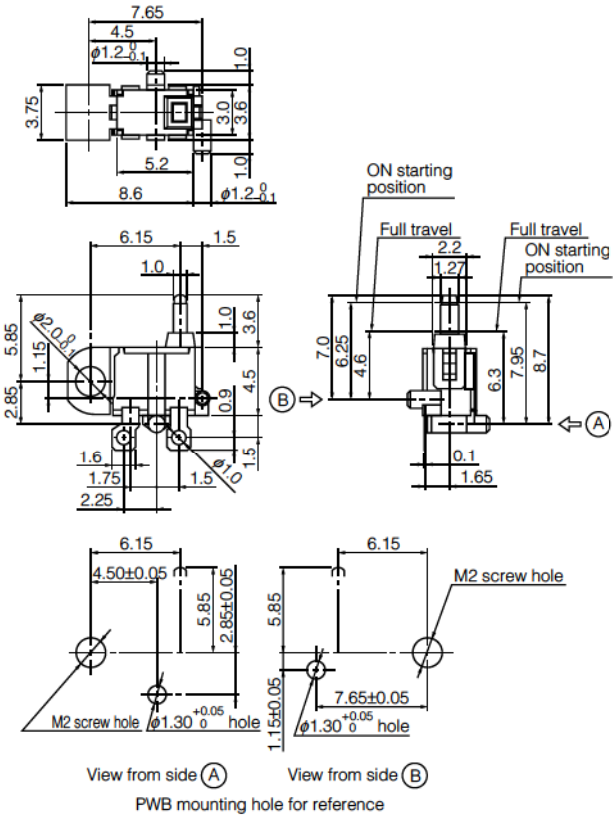

No. 10 ESE11HS2 For reflow soldering 1-pole 1-throw

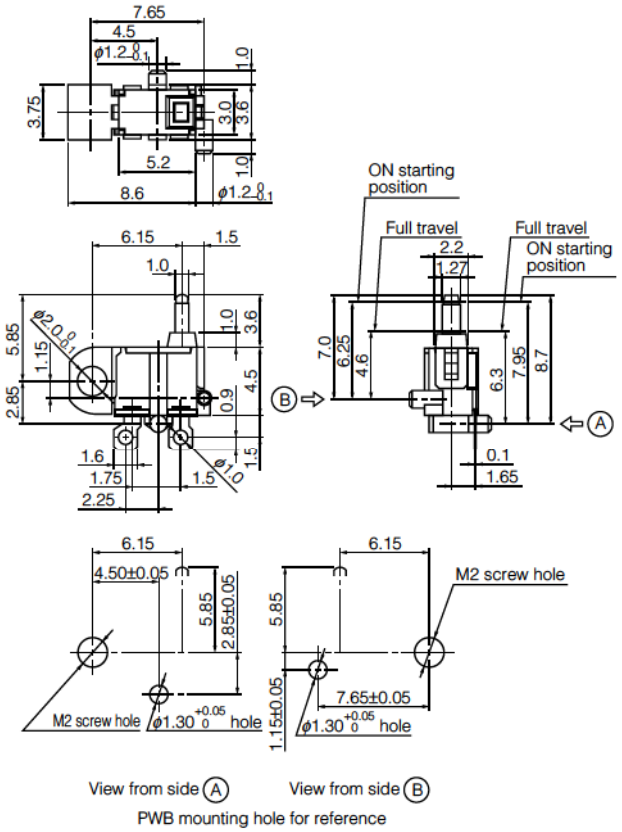

Design and specifications are each subject to change without notice. Ask factory for the current technical specifications before purchase and/or use.
Should a safety concern arise regarding this product, please be sure to contact us immediately.

■ Dimensions in mm (not to scale)

Horizontal Type

No. 11 ESE11SF1A With mounting hole 1-pole 1-throw

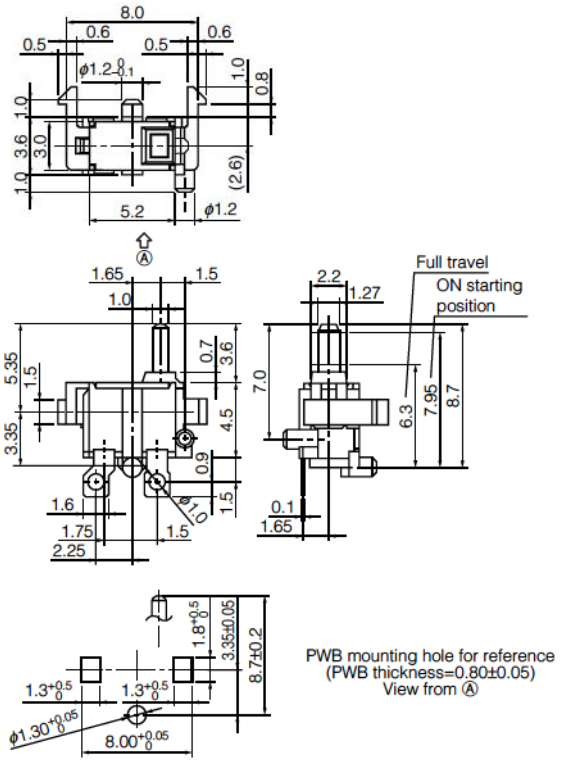

■ Circuit Diagram

MH, SH Type	MV, SV Type	SF, HS Type
1-pole 1-throw (N.O)	1-pole 1-throw (N.O)	1-pole 1-throw (N.O)

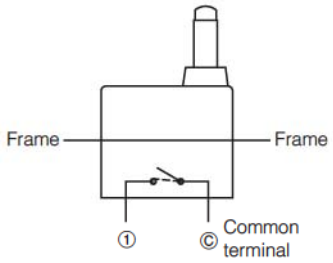

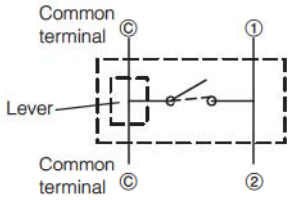

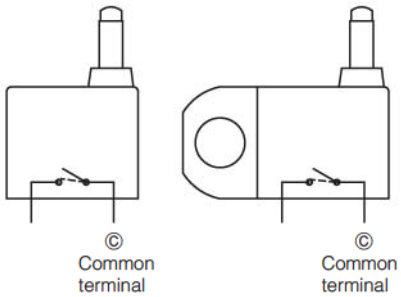

■ Packaging Specifications
Standard Reel Dimensions in mm (not to scale)

Taping Reel

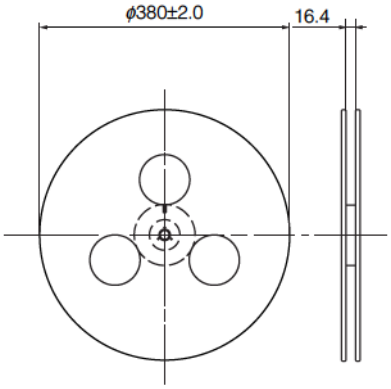

Embossed Carrier Taping

ESE11MV1T, ESE11MV5T, ESE11MV9T

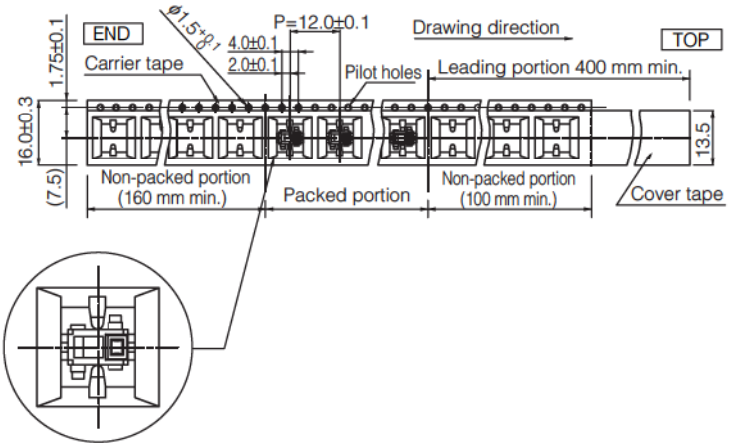

ESE11MH1T, ESE11MH2T

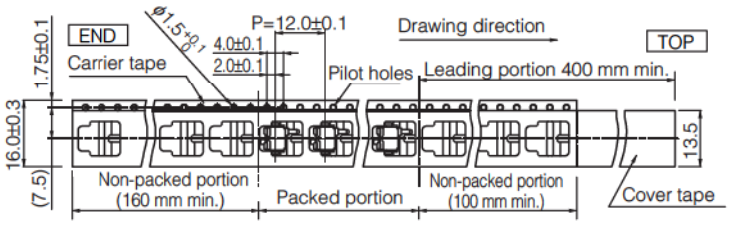

Design and specifications are each subject to change without notice. Ask factory for the current technical specifications before purchase and/or use.
Should a safety concern arise regarding this product, please be sure to contact us immediately.

1HW Detector Switches

Type: **ESE23**

Bidirectional operation, midpoint auto-return Type

■ Features

- External dimensions : 4.1 mm×5.0 mm, Height 1.5 mm
- Long over-travel (through-operation available)
- Usable as an operation switch (an input device)

■ Recommended Applications

- Detection of media in portable electronic equipment (CD-ROM, DVD, Digital still cameras, etc.)
- Operating switches for other electronic equipment.

■ Explanation of Part Numbers

1	2	3	4	5	6	7	8	9
E	S	E	2	3				
Product Code			Type				Design No.	

6th	Terminal Type
F	Straight Type
J	J-bent Type

7th	Positioning Boss
0	Without Boss
1	With Boss

■ Specifications

Rating	50 μA 3 Vdc to 10 mA 5 Vdc (Resistive load)
Contact Resistance	500 mΩ max. (Initial)
Insulation Resistance	100 MΩ min. (100 Vdc)
Dielectric Withstanding Voltage	100 Vac for 1 minute
Operating Force	300 mN max.
Mounting Height	1.5 mm
Poles and Throws	1-pole 2-throws (OFF at midpoint)
Full Travel (Pushing distance)	With Boss 1.0 mm (1.5 mm) Without Boss 2.2 mm (1.5 mm)
Operating Life	50000 cycles min.
Temperature Range	–10 °C to +60 °C
Heat Resistance	+70 °C for 96 hours
Low Temperature Resistance	–25 °C for 96 hours
Humidity Resistance	+40 °C 90 % to 95 % RH for 96 hours
Minimum Quantity/Packing Unit	4000 pcs. Embossed Taping (Reel Pack)
Quantity/Carton	24000 pcs.

Design and specifications are each subject to change without notice. Ask factory for the current technical specifications before purchase and/or use.
Should a safety concern arise regarding this product, please be sure to contact us immediately.

00 Oct. 2012

■ Dimensions in mm (not to scale)

No. 1 **ESE23J101** J-bent terminal with boss (Without Boss available)

1-pole 2-throws

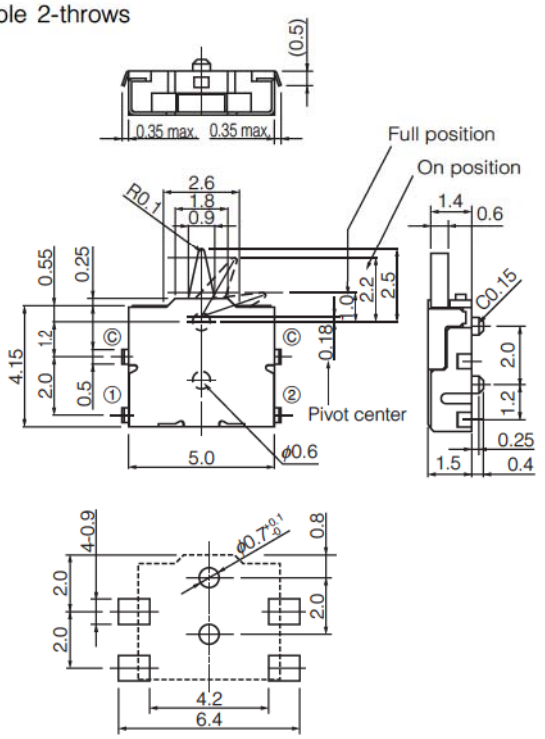

PWB mounting hole for reference
(Pitch tolerance : ±0.05)

No. 2 **ESE23F101** Straight terminal with boss (Without Boss available)

1-pole 2-throws

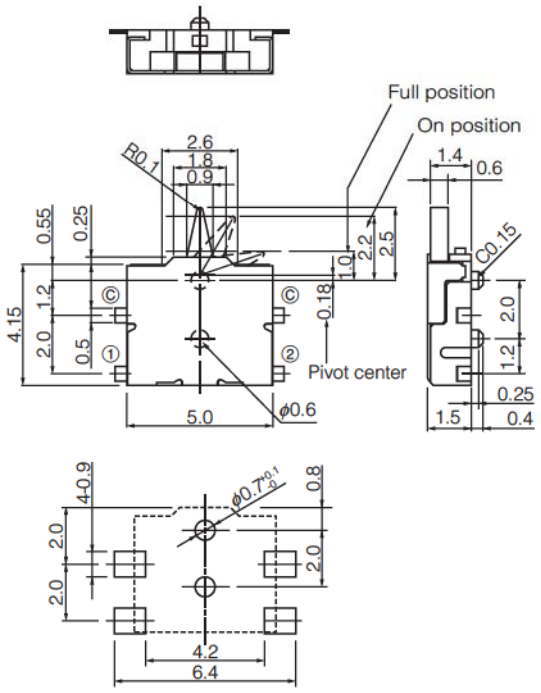

PWB mounting hole for reference
(Pitch tolerance : ±0.05)

■ Circuit Diagram

1-pole 2-throws (N . O)

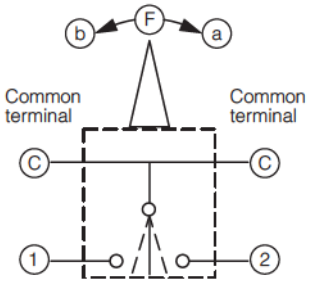

Lever position \ Terminal No.	1	c	2
F		○	
a	○	○	
b		○	○

■ Packaging Specifications

Standard Reel Dimensions in mm (not to scale)

Taping Reel

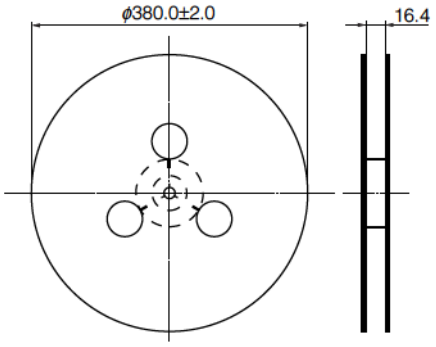

Embossed Carrier Taping

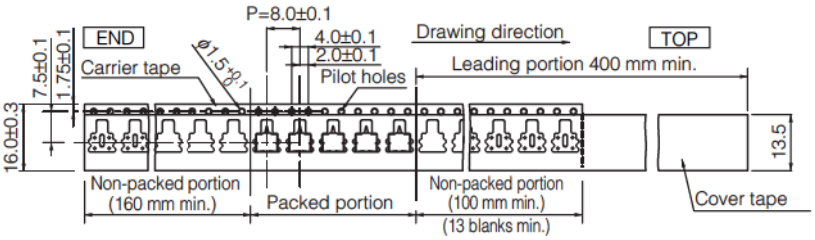

Design and specifications are each subject to change without notice. Ask factory for the current technical specifications before purchase and/or use.
Should a safety concern arise regarding this product, please be sure to contact us immediately.

2W Detector Switches

Type: **ESE24**

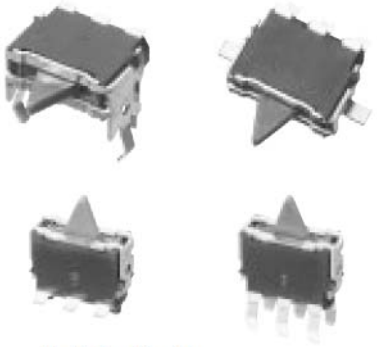

Bidirectional operation, auto-return to midpoint type.

■ Features

- A lever-type detector switch with high reliability using sliding mechanical contacts
- Long over-travel (through-operation available)
- Used as an operation switch (an input device)

■ Recommended Applications

- Detection of media in portable electronic equipment (CD-ROM, DVD, Digital still cameras, etc.)
- Operating switches for other electronic equipment.

■ Explanation of Part Number

1	2	3	4	5	6	7	8	9
E	S	E	2	4				
Product Code			Type		Style		Design No.	

6th & 7th	Mounting Method & Style
SV	Vertical type for wave soldering
SH	Horizontal type for wave soldering
MV	Vertical type for reflow soldering
MH	Horizontal type for reflow soldering

■ Specifications

Rating		50 µA 3 Vdc to 10 mA 5 Vdc (Resistive load)
Contact Resistance		500 mΩ max. (Initial)
Insulation Resistance		100 MΩ min. (100 Vdc)
Dielectric Withstanding Voltage		100 Vac for 1 minute
Operating Force		350 mN max.
Mounting Height		· Type SV 5.6 mm · Type SH 4.65 mm · Type MV 5.6 mm · Type MH 3.0 mm
Poles and Throws		1-pole 2-throws (OFF at midpoint)
Full Travel (Pushing distance)		· Type SV 6.1 mm (2.45 mm) · Type SH 2.6 mm (2.45 mm) · Type MV 6.1 mm (2.45 mm) · Type MH 1.4 mm (2.45 mm)
Operating Life		50000 cycles min.
Temperature Range		–10 °C to +70 °C
Heat Resistance		+80 °C for 96 hours
Low Temperature Resistance		–25 °C for 96 hours
Humidity Resistance		+40 °C 90 % to 95 % RH for 96 hours
Minimum Quantity/Packing Unit	ESE24MH, MV, SV, SH	200 pcs. Polyethylene Bag (Bulk) *1
	ESE24MH□T	1000 pcs. Embossed Taping (Reel Pack)*2
	ESE24MV□T	500 pcs. Embossed Taping (Reel Pack)
Quantity/Carton	ESE24MH, MV, SV, SH	10000 pcs. Polyethylene Bag (Bulk)
	ESE24MH□T	6000 pcs. Embossed Taping (Reel Pack)
	ESE24MV□T	3000 pcs. Embossed Taping (Reel Pack)

*1 ESE24SH type: 160 pcs. (Polyethylene Bag), 8000 pcs. (Reel Pack)
*2 ESE24SV, ESE24SH are excluded

Design and specifications are each subject to change without notice. Ask factory for the current technical specifications before purchase and/or use.
Should a safety concern arise regarding this product, please be sure to contact us immediately.

00 Oct. 2012

■ Dimensions in mm (not to scale)

No. 1 **ESE24SV3** Vertical type for wave soldering
1-pole 2-throws

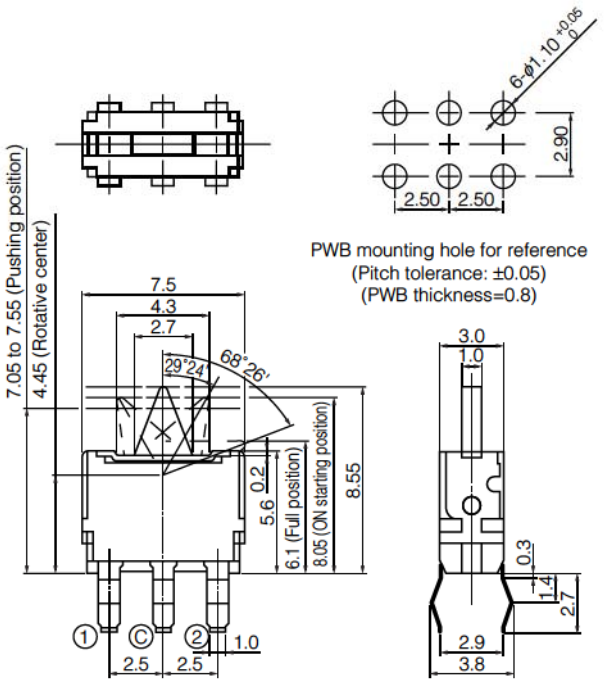

No. 2 **ESE24SH1** Horizontal type for wave soldering
1-pole 2-throws

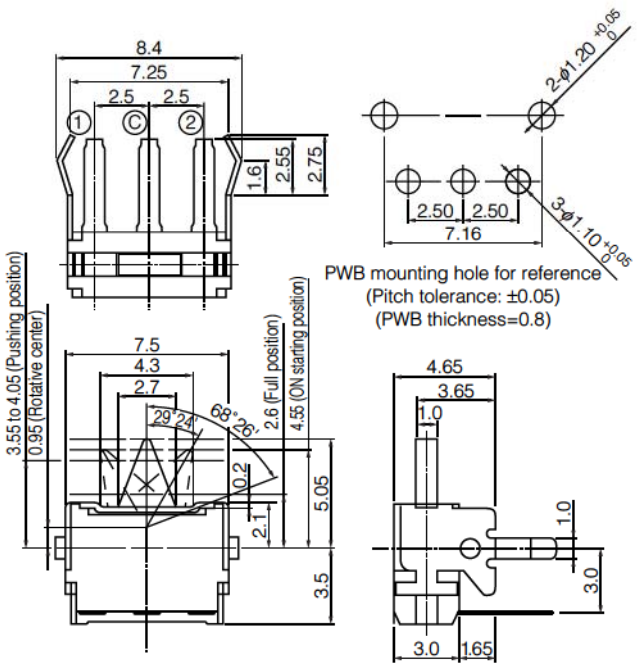

No. 3 **ESE24MV1** Vertical type for reflow soldering
1-pole 2-throws
ESE24MV1T (Embossed Taping)

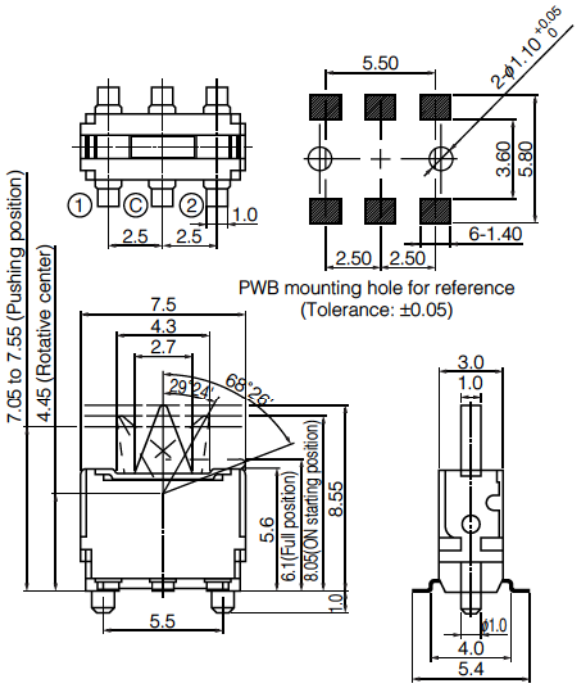

No. 4 **ESE24MH1** Horizontal type for reflow soldering
1-pole 2-throws
ESE24MH1T (Embossed Taping)

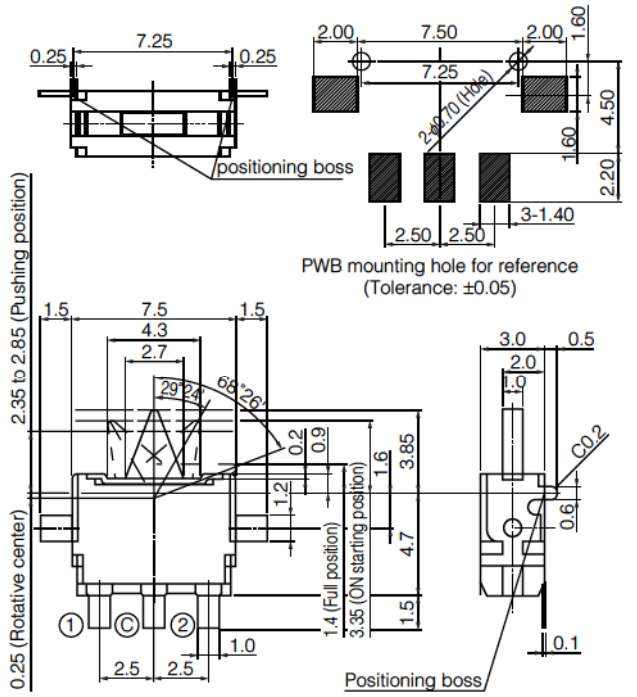

Design and specifications are each subject to change without notice. Ask factory for the current technical specifications before purchase and/or use.
Should a safety concern arise regarding this product, please be sure to contact us immediately.

■ Circuit Diagram

1-pole 2-throws (N . O)

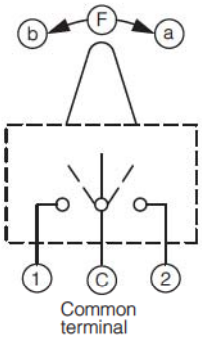

Lever position \ Terminal No.	1	c	2
F		○	
a	○	○	
b		○	○

■ Packaging Specifications

Standard Reel Dimensions in mm (not to scale)

Taping Reel

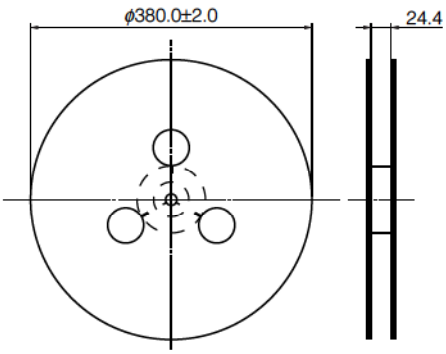

Embossed Carrier Taping

ESE24MH□T

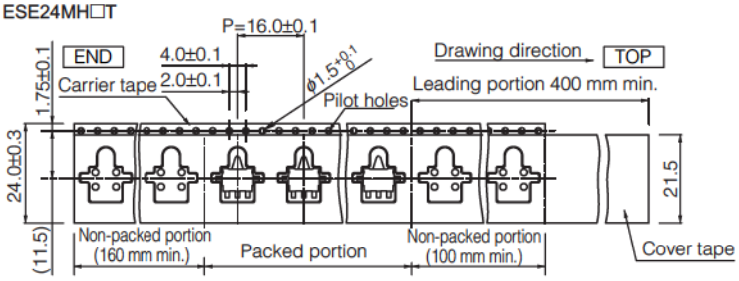

ESE24MV□T

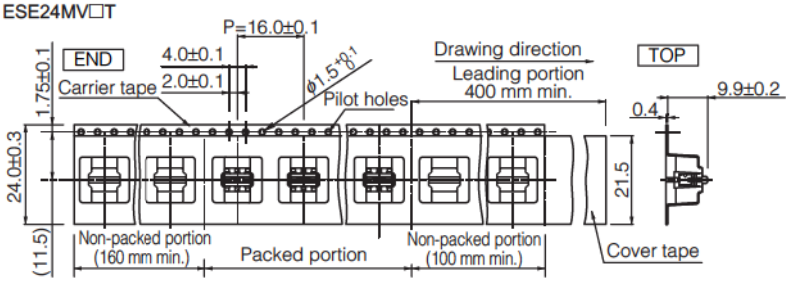

Design and specifications are each subject to change without notice. Ask factory for the current technical specifications before purchase and/or use.
Should a safety concern arise regarding this product, please be sure to contact us immediately.

CONTENTS

Page

■Quick Selection Guide ····· ES55

■Minimum Quantity/Packing Unit ····· ES56

■Jog Ball (EVQWJN) ····· ES57

■ Quick Selection Guide

Type, Series	Appearance	Part Numbers	Country of origin	External Dimensions L×W×H (mm)	Operating Force	Applicable Soldering ∗ SMD	Page
Jog Ball		EVQWJN	China	10.7×9.3×6.0	Push : 1.0 N, 1.3 N, 1.6 N (Use of EVQP6 Type)	∗ Reflow Soldering	ES57

Country of origin : As of April 2013

Design and specifications are each subject to change without notice. Ask factory for the current technical specifications before purchase and/or use.
Should a safety concern arise regarding this product, please be sure to contact us immediately.

■ Minimum Quantity/Packing Unit

Please place an order by an integer multiple of the Quantity/Carton.

Type, Series	Part Numbers	Packaging	Quantity/Carton	Min.Q'ty/ Packing Unit
Jog Ball	EVQWJN	Tray Pack	1000 pcs.	200 pcs.

Design and specifications are each subject to change without notice. Ask factory for the current technical specifications before purchase and/or use.
Should a safety concern arise regarding this product, please be sure to contact us immediately.

Jog Ball

Type: **EVQWJN**

■ Features

- External dimensions : 10.7 mm×9.3 mm, Height: 6.0 mm,
  Ball diameter : ϕ5.5 mm
- Long life : 1 million operations (each direction)
  Magnetic detection method.
  (Non-contact type)
- High resolution : 11 pulses/360 °
- The ball rotation and push operation provide superior operability
- Light transmitting type (LED mounted on a PWB)

■ Usage Example

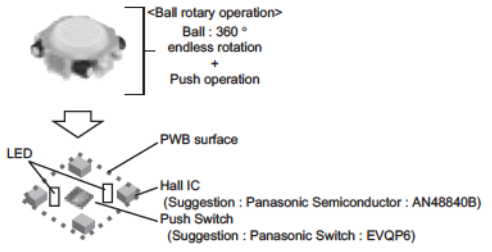

Note : Jog Ball requires, hall IC and a switch (LED) mounted on a PWB.

■ Recommended Applications

- Menu selection and confirmation operations of portable electronic equipment (Mobile phones, Digital cameras, Portable audio players, PDAs, and HPCs), car navigation systems, remote controllers, etc.

■ Explanation of Part Numbers

1	2	3	4	5	6	7	8	9
E	V	Q	W	J	N			
Product Code			Type			Design No.		

■ Specifications

Electrical	Rating		· 20 mA 15 Vdc (Use of EVQP6 Type) · 3 Vdc (Use of AN48840B Type)
Mechanical	Operating Force	Push	1.0 N, 1.3 N, 1.6 N (Use of EVQP6 Type)
	Resolution	Rotate	11 pulses/ 360 °
	Travel	Push	0.9 mm
Endurance	Operating life	Rotate	1000000 cycles min.
		Push	1000000 cycles min. (Use of EVQP6 Type)
Temperature Range			–20 °C to +70 °C
Minimum Quantity/Packing Unit			200 pcs. (Tray Pack)
Quantity / Carton			1000 pcs.

Design and specifications are each subject to change without notice. Ask factory for the current technical specifications before purchase and/or use.
Should a safety concern arise regarding this product, please be sure to contact us immediately.

■ Dimensions in mm (not to scale)

EVQWJN

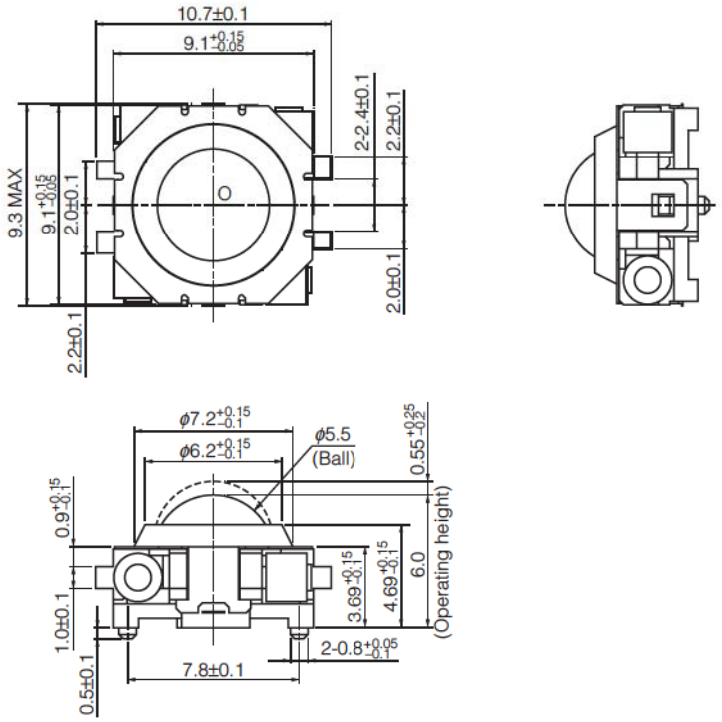

■ Usage Example

Usage (Reference)

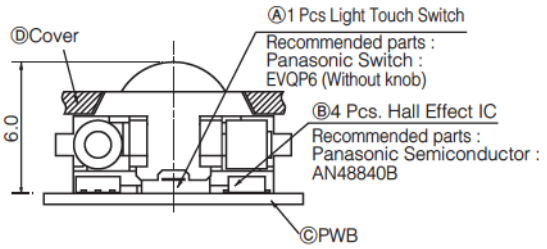

Note : Ⓐ to Ⓓ are not equipped with this product.

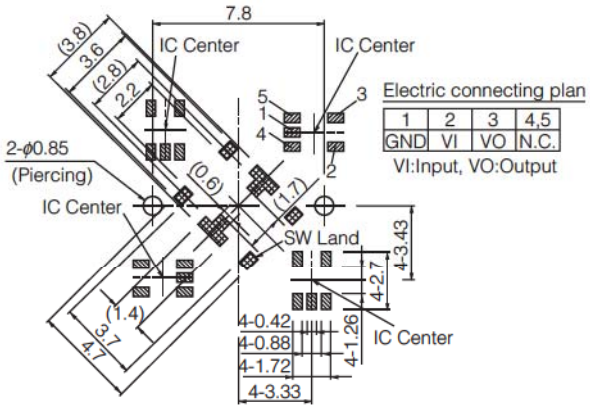

Electric connecting plan

1	2	3	4,5
GND	VI	VO	N.C.

VI:Input, VO:Output

SW Land pattern
IC Land pattern

PWB land pattern for reference

Design and specifications are each subject to change without notice. Ask factory for the current technical specifications before purchase and/or use.
Should a safety concern arise regarding this product, please be sure to contact us immediately.

CONTENTS

Page
■Quick Selection Guide ····· ES60
■Checklist Befor Inquiry ····· ES62
■Application Notes ····· ES63
■Common Specifications ····· ES64
■Minimum Quantity/Packing Unit ····· ES65
■4 mm Square SMD Light Touch Switches (EVQP6/6P6/7P6/9P6) ····· ES66
■4.5 mm Square SMD Light Touch Switches (EVQPQ) ····· ES70
■4.9 mm Square SMD Light Touch Switches (EVQPL/3PL/5PL/PT) ····· ES73
■6 mm Square Thin Type SMD Light Touch Switches (EVQP0/Q2) ····· ES76
■3.0 mm×2.0 mm SMD Light Touch Switches (EVPAW) ····· ES80
■3.0 mm×2.6 mm SMD Light Touch Switches (EVPAF) ····· ES83
■3.5 mm×2.9 mm SMD Light Touch Switches (EVPAA) ····· ES86
■4.7 mm×3.5 mm SMD Light Touch Switches (EVQP2/P9/3P2) ····· ES89
■6.0 mm×3.5 mm SMD Light Touch Switches (EVQPE1/PN/5P) ····· ES93
■3.5 mm×2.9 mm Side-operational SMD Light Touch Switches (EVQP7/P3/9P7) ····· ES95
■3.5 mm×2.9 mm Side-operational Half Dive / SMD Light Touch Switches (EVPAN) ····· ES99
■Small-sized Side-operational SMD Light Touch Switches (EVQPU) ····· ES102
■2.8 mm×2.3 mm Side-operational Edge Mount Light Touch Switches (EVPAV) ····· ES106
■4.5 mm×2.2 mm Side-operational Edge Mount Light Touch Switches (EVPAE) ····· ES108
■6.2 mm×2.5 mm Side-operational Edge Mount Light Touch Switches (EVQP4) ····· ES110
■6.1 mm×4.0 mm Side-operational SMD Light Touch Switches (EVQPS) ····· ES113
■5N Type Light Touch Switches (EVQPA/PB) ····· ES117
■5N Type Side-operational Light Touch Switches (EVQPF) ····· ES120
■5N Type 2R Light Touch Switches (EVQ2) ····· ES122
■5N Type Side-operational 4R Light Touch Switches (EVQPC) ····· ES124
■Round Type 2R Light Touch Switches (EVQ11) ····· ES126
■6.0 mm×3.5 mm Light Touch Switches (EVQPE) ····· ES128
■6.0 mm×3.5 mm 2R Light Touch Switches (EVQPJ) ····· ES130
■Over Travel Light Touch Switches (EVQP0) ····· ES132
■4 mm Square Double-action SMD Light Touch Switches (EVPAH) ····· ES134
■6 mm Square Thin Type Double-action SMD Light Touch Switches (EVQPR/Q0/3PR) ····· ES137
■4.7 mm×3.5 mm Double-action Side-operational SMD Light Touch Switches (EVPAJ) ····· ES140
■6.2 mm×3.7 mm Double-action Side-operational Edge Mount / SMD Light Touch Switches (EVQQ0) ····· ES143
■6 mm Square Long Travel SMD Light Touch Switches (EVQP0/P1/9P) ····· ES146
■6 mm Square Long Travel 2 terminals SMD Light Touch Switches (EVPAS) ····· ES149
■6 mm Square Long Travel 2R Light Touch Switches (EVQPV) ····· ES152
■8 mm Square Long Travel SMD Light Touch Switches (EVQQ1) ····· ES154
■8 mm Square Long Travel 2R Light Touch Switches (EVQQJ) ····· ES156
■10 mm Square Center Space Long Travel SMD Light Touch Switches (EVPAD) ····· ES158

■ Quick Selection Guide

Type, Series	Appearance	Part Numbers	Country of origin	External Dimensions L×W×H (mm)	Operating Force	Applicable Soldering ✱SMD	Variety	Page
4 mm Square SMD		EVQP6	Japan Malaysia	4.1×4.1×0.35 4.1×4.1×0.58	1.6 N 2.4 N	✱Reflow	Push Plate:With, Without Ground Terminal:With, Without Positioning Boss:Without	ES66
		EVQ6P6 EVQ7P6 EVQ9P6		4.1×4.1×0.43	1.0 N 1.6 N 2.4 N		Push Plate:Without Ground Terminal:With Positioning Boss:Without	
4.5 mm Square SMD		EVQPQ	Japan	4.5×4.5×0.55	1.6 N 2.4 N	✱Reflow	Push Plate:Without Ground Terminal:Without Positioning Boss:Without	ES70
4.9 mm Square SMD		EVQPL EVQ3PL EVQ5PL EVQPT	Japan Malaysia	4.9×4.9×0.8 4.9×4.9×1.5	1.0 N 1.6 N 2.6 N 3.5 N	✱Reflow	Push Plate:With, Without Ground Terminal:With Positioning Boss:Without	ES73
6 mm Square Thin Type SMD		EVQP0 EVQQ2	Malaysia	6.5×6.0×2.0 6.5×6.0×2.5 6.5×6.0×3.1	0.5 N, 0.6 N 1.0 N, 1.3 N 1.6 N, 2.6 N 3.5 N	✱Reflow	Push Plate:With Ground Terminal:With, Without Positioning Boss:Without	ES76
NEW 3.0 mm×2.0 mm SMD		EVPAW	Japan China	3.0×2.0×0.6	1.6 N 2.4 N 3.3 N	✱Reflow	Push Plate:With	ES80
3.0 mm×2.6 mm SMD		EVPAF	Japan Malaysia China	3.0×2.6×0.65	1.3 N 1.6 N	✱Reflow	Push Plate:With	ES83
				3.0×2.6×0.7	2.4 N 3.4 N			
3.5 mm×2.9 mm SMD		EVPAA	Japan China	3.5×2.9×1.7	1.0 N, 1.6 N 2.4 N, 3.5 N 5.0 N	✱Reflow	Push Plate:With Ground Terminal:With, Without Positioning Boss:Without	ES86
4.7 mm×3.5 mm SMD		EVQP2 EVQP9 EVQ3P2	Japan	4.7×3.5×2.1 4.7×3.5×2.5	1.0 N, 1.6 N 2.4 N, 2.5 N 3.5 N, 5.0 N	✱Reflow	Push Plate:With Push Travel:Middele, Short Ground Terminal:With, Without Positioning Boss:Without	ES89
6.0 mm×3.5 mm SMD		EVQPE1 EVQPN EVQ5P	Japan	6.0×3.5×4.3 6.0×3.5×5.0	1.0 N 1.6 N 2.4 N	✱Reflow	Push Platel:With Embossed Taping Ground Terminal:Without Positioning Boss:Without	ES93
3.5 mm×2.9 mm Side-operational SMD		EVQP7 EVQP3 EVQ9P7	Japan China Malaysia	3.5×2.9×1.35	1.6 N 2.2 N	✱Reflow	Terminal:Straight, J-bent, L-shape Ground Terminal:With, Without Positioning Boss:With, Without	ES95
3.5 mm×2.9 mm Side-operational Half Dive / SMD		EVPAN	Japan Malaysia	3.5×2.9×1.2	1.6 N 2.2 N	✱Reflow	Terminal:Straight L-shape	ES99
Small-sized Side-operational SMD		EVQPU	Japan China	4.7×3.5×1.65	1.6 N 2.2 N	✱Reflow	Terminal:Straight, J-bent Ground Terminal:With, Without Positioning Boss:With, Without	ES102
NEW 2.8 mm×2.3 mm Side-operational Edge Mount		EVPAV	Japan China	2.8×2.3×1.95	1.6 N	✱Reflow	Ground Terminal:With (Cover Plate)	ES106
4.5 mm×2.2 mm Side-operational Edge Mount		EVPAE	Japan	4.5×2.25×2.9	1.6 N 3.0 N	✱Reflow	Ground Terminal:With (Cover Plate)	ES108
6.2 mm×2.5 mm Side-operational Edge Mount		EVQP4	Japan	6.2×2.55×3.5	1.0 N, 1.6 N 2.4 N, 2.5 N 3.5 N, 5.0 N	✱Reflow Mounted on pc board edge	Push Plate:With Push Travel:Middele, Short Ground Terminal:With (Cover Plate)	ES110
6.1 mm×4.0 mm Side-operational SMD		EVQPS	Japan	6.1×4.0×1.8	1.6 N 2.2 N	✱Reflow	Terminal : Straight, J-bent Ground Terminal:With, Without Positioning Boss:With, Without	ES113

Country of origin : As of April 2013

Design and specifications are each subject to change without notice. Ask factory for the current technical specifications before purchase and/or use.
Should a safety concern arise regarding this product, please be sure to contact us immediately.

Type, Series	Appearance	Part Numbers	Country of origin	External Dimensions L×W×H(mm)	Operating Force	Applicable Soldering ✱SMD	Variety	Page
5N Type		EVQPA EVQPB	Japan Malaysia China Japan China	6.0×6.0×4.3 6.0×6.0×5.0 6.0×6.0×7.0 6.0×6.0×9.5	1.0 N 1.3 N 1.6 N 2.6 N	Manual Wave Soldering	Push Pla te:With Ground Terminal:With, Without	ES117
5N Type Side-operational		EVQPF	Japan	7.5×7.1×7.15 7.5×7.1×7.85 7.5×7.1×9.85 7.5×7.1×12.35	1.0 N 1.3 N 1.6 N 2.6 N	Manual Wave Soldering	Push Plate:With	ES120
5N Type 2R		EVQ2	Japan Malaysia	6.0×6.0×4.3 6.0×6.0×5.0 6.0×6.0×7.0 6.0×6.0×9.5	1.0 N 1.3 N 1.6 N 2.6 N	Wave Soldering	Push Plate:With Ground Terminal:With, Without	ES122
5N Type Side-operational 4R		EVQPC	Japan	7.5×7.1×9.25	1.0 N 1.3 N 1.6 N 2.6 N	Wave Soldering	Push Plate:With	ES124
Round Type 2R		EVQ11	Japan Malaysia China	6.0×6.0×4.3 6.0×6.0×5.0 6.0×6.0×7.0 6.0×6.0×9.5	1.0 N 1.3 N 1.6 N 2.6 N	Wave Soldering	Push Plate:With Ground Terminal:Without	ES126
6.0 mm×3.5 mm		EVQPE	Japan	6.0×3.5×4.3 6.0×3.5×5.0	1.0 N 1.6 N 2.4 N	Wave Soldering	Push Plate:With Bulk Ground Terminal:Without Positioning Boss:Without	ES128
6.0 mm×3.5 mm 2R		EVQPJ	Japan	6.0×3.5×4.3 6.0×3.5×5.0	1.0 N 1.6 N 2.4 N	Wave Soldering	Push Platel:With Radial Taping Ground Terminal:Without Positioning Boss:Without	ES130
Over Travel		EVQP0	Japan China	6.2×6.2×7.45	0.74 N 1.3 N	Wave Soldering	Push Plate:With Ground Terminal:Without	ES132
4 mm Square Double-action SMD		EVPAH	Japan	4.0×4.1×0.59	① 0.8 N,0.9 N,1.0 N ② 1.6 N,2.0 N,2.6 N	✱Reflow	Push Plate:With Terminal:J-bent Ground Terminal:With (Cover Plate)	ES134
6 mm Square Thin Type Double-action SMD		EVQPR EVQQ0 EVQ3PR	Japan	6.0×6.0×0.9 6.0×6.0×0.95	①0.7 N,1.0 N ②2.6 N	✱Reflow	Push Plate:With, Without Ground Terminal:With, Without Positioning Boss:With, Without	ES137
4.7 mm×3.5 mm Double-action Side-operational SMD		EVPAJ	Japan	4.7×3.5×1.2	① 1.6 N ② 2.6 N	✱Reflow	Straight L-shape	ES140
6.2 mm×3.7 mm Double-action Side-operational Edge Mount / SMD		EVQQ0	Japan	6.2×3.75×3.5	① 1.0 N ② 2.6 N	✱Reflow Mounted on pc board edge/Reflow	Push Plate:With Ground Terminal:With (Cover Plate)	ES143
6 mm Square Long Travel SMD		EVQP0 EVQP1 EVQ9P	Japan	6.0×6.1×5.0	1.6 N, 2.0 N 2.2 N, 2.5 N 3.0 N, 3.5 N	✱Reflow	Push Plate:With Push Travel: 1.0 mm, 1.3 mm Ground Terminal:Without	ES146
6 mm Square Long Travel 2 terminals SMD **NEW**		EVPAS	Japan	6.0×6.1×5.0	1.6 N, 2.0 N 2.2 N, 2.5 N 3.0 N, 3.5 N	✱Reflow	Push Plate:With Push Travel: 1.0 mm, 1.3 mm Ground Terminal:Without	ES149
6 mm Square Long Travel 2R		EVQPV	Japan	6.0×6.1×5.0	1.6 N 2.0 N 2.2 N 2.5 N 3.5 N	Wave Soldering	Push Plate:With Push Travel: 1.0 mm, 1.3 mm Ground Terminal:Without	ES152
8 mm Square Long Travel SMD		EVQQ1	Japan	8.5×8.5×6.5	4.0 N 5.0 N	✱Reflow	Push Plate:With Ground Terminal:Without	ES154
8 mm Square Long Travel 2R		EVQQJ	Japan	8.0×8.0×5.0 8.0×8.0×5.5 8.0×8.0×6.1	0.8 N 1.3 N 2.5 N 3.0 N	Wave Soldering	Push Plate:With Push Travel: 1.0 mm, 1.2 mm, 1.75mm Ground Terminal:Without	ES156
10 mm Square Center Space Long Travel SMD		EVPAD	Japan	9.8×9.8×4.7	4.0 N	✱Reflow	Push Plate:With Push Travel:1.0 mm Ground Terminal:Without	ES158

Country of origin : As of April 2013

Design and specifications are each subject to change without notice. Ask factory for the current technical specifications before purchase and/or use.
Should a safety concern arise regarding this product, please be sure to contact us immediately.

■ Checklist Before Inquiry

When specifying Light Touch Switches, please take advantage of our standard products for better price and delivery. Please inquire about the following items before ordering.

Item				Information (Requirements)
Common	C-1	Inquiry purpose		New use, Modification, Others ( )
	C-2	Modification	Previous supplier	
			Conventional part No.	
			Purpose	
	C-3	Application	Equipment	
			Environment	Indoor/Outdoor use, Stationary/Portable set, Car installation High humidity, SO_2, NaCl
			Temperature	(°C) to (°C)
Electrical Specifications	E-1	Ratings		(mA), (V dc)
Shapes/Dimensions	M-1	Operation	Operation type	· Vertical (The push plate operation is perpendicular to the printed circuit board) · Horizontal (The push plate operation is parallel to the printed circuit board)
			Operating force	(N)
			Travel	(mm)
	M-2	Anti-electrostatic		Ground Terminal: With, Without
	M-3	Shapes	Dimensions	( ) mm × ( ) mm, hight( ) mm
			Terminal Type (Reflow)	Flat Terminal,J-bent Terminal
			Positioning	Positioning Boss: with, without
Others	L-1	Soldering	Soldering	Manual, Flow, Reflow
			Soldering Conditions	Temp.(°C), Time (s)
	L-2	Packing Unit		Polyethylene Bag (Bulk), Embossed Taping (Reel Pack), Raial Taping (Reel Pack), Stick
	L-3	Special requirements for endurance		
	L-4	Special requirements for safety		
	L-5	Other questionnaires		

Notes:
1. When selecting Switches, please consider using our standard products for better prices and short delivery times.
2. Please inform the following items when ordering.

Design and specifications are each subject to change without notice. Ask factory for the current technical specifications before purchase and/or use.
Should a safety concern arise regarding this product, please be sure to contact us immediately.

■ ⚠ Application Notes

When using our Light Touch Switches, please observe the following items ("prohibited items") and be cautious of the following in order to prevent dangerous accidents and deterioration of performance.

1. Notes on soldering conditions

When performing solder dipping, check the soldering conditions according to the "Product Specification for Information," because the conditions vary with the product. Do not wash the switch after solder dipping because flux may enter the switch, resulting in contact failure. Avoid use of jumper cables near the switches because flux may attach to them.

1. Control the liquid level so that flux does not enter the switch from the top.
2. When performing manual soldering, perform it at a temperature of 350 °C within 3 seconds.
3. Do not apply a load to the switch lever after soldering.
4. For reflow soldering
   When performing reflow soldering using a hot-air oven or an infrared oven, observe the following conditions. Since the temperature applied to a switch and its terminals varies with the type and size of the PWB and the mounting density of the parts, sufficiently check the conditions in advance.
5. When a board with double-sided through holes is used, do not make through holes immediately under the switch case. Otherwise, the switch case may fuse.

2. Notes on design of a set

1. For switch mounting holes, refer to the "Recommended PWB piercing plan" as described in "Dimensions."
2. For shapes of operating parts in a set, refer to recommended shapes described in "Product Specifications for Information."

3. Other prohibited items and notes

1. Take care not to apply excessive load to a switch. Doing so may cause terminal deformation, contact failure, and/or malfunction.
2. Sufficiently check any generation of corrosive gas from the components in a set under actual operating conditions. Corrosive gas may cause contact failure and corrosive stress cracking of metal.
3. To prevent contact failure due to foreign matter (such as chips of a PWB and flux) entering a switch, take care when handling a PWB after mounting. Do not stack the PWB's.

4. Prohibited items and notes on storage conditions

Do not store the switches under high temperatures and/or high humidity, or in a location where corrosive gas may be generated. Store the switches at room temperature and room humidity in a packed condition. Use them within a maximum of 6 months after delivery. Check the date of manufacture on the package box and apply the "first-in-first-out" rule. If unpacked switches must be stored as inventory, store them in a polyethylene bag to keep out air.

5. Prohibited items on fire and smoking

1. Absolutely avoid use of a switch beyond its rated range because doing so may cause a fire.
   If misuse or abnormal use may result in conditions in which the switch is used out of its rated range, take proper measures such as current interruption using a protective circuit.
2. The grade of nonflammability for resin used in Light Touch Switches is "94HB", which is based on UL94 Standards (flammability test for plastic materials). Prohibit use in a location where a spreading fire may be generated or prepare against a spreading fire.

6. For use in equipment for which safety requested

Although care is taken to ensure switch quality, variation of contact resistance (increase), short circuits, open circuits, and temperature rise are some problems that might be generated.
To design a set which places maximum emphasis on safety, review the affect of any single fault of a switch in advance and perform virtually fail-safe design to ensure maximum safety by:

1. preparing a protective circuit or a protective device to improve system safety, and
2. preparing a redundant circuit to improve system safety so that the single fault of a switch does not cause a dangerous situation.

7. For actual use, be sure to refer to "Product Specifications for Information."

Design and specifications are each subject to change without notice. Ask factory for the current technical specifications before purchase and/or use.
Should a safety concern arise regarding this product, please be sure to contact us immediately.

■ Common Specifications

■ Packaging Methods for Radial Taping

● Drawing-out of taped products

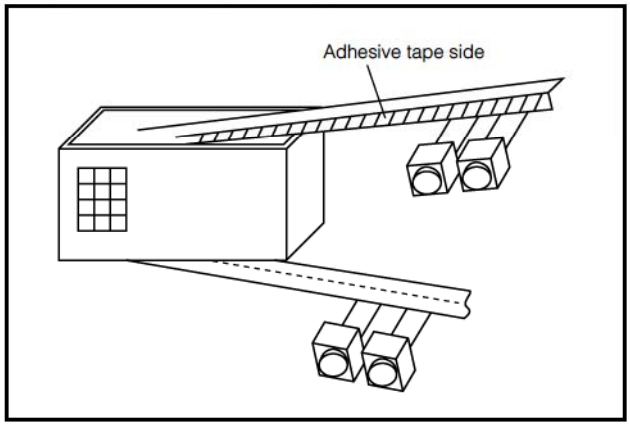

Drawing-out can be done from top or bottom of an inner carton.

● Pull-strength of taped products

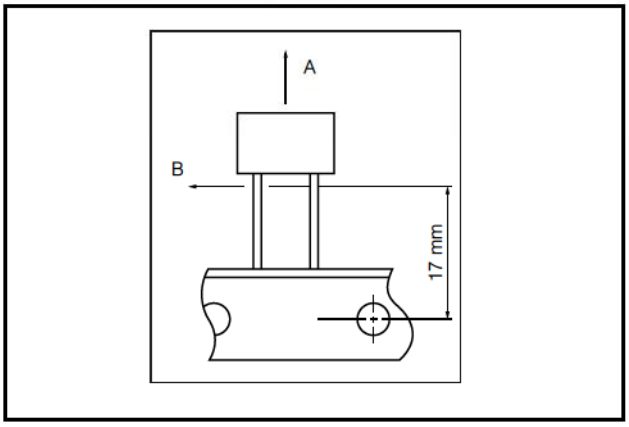

● Taped products shall not be fully drawn-out from the tape when pulling in direction A at 5.0 N max.

● Taped products shall not be drawn-out from the tape when pulling in direction B at 1.0N for 3 seconds.

Design and specifications are each subject to change without notice. Ask factory for the current technical specifications before purchase and/or use.
Should a safety concern arise regarding this product, please be sure to contact us immediately.

■ Minimum Quantity/Packing Unit

Please place an order by an integer multiple of the Quantity/Carton.

Type, Series	Part No.	Packaging	Quantity/ Carton	Min. Q'ty Packing Unit	Notes
4 mm Square SMD Light Touch Switches	EVQP6/6P6/7P6/9P6	Embossed Taping (Reel Pack)	50000 pcs.	10000 pcs.	
4.5 mm Square SMD Light Touch Switches	EVQPQ		50000 pcs.	10000 pcs.	
4.9 mm Square SMD Light Touch Switches	EVQPL/3PL/5PL/PT		25000 pcs.	5000 pcs.	
6 mm Square Thin Type SMD Light Touch Switches	EVQP0		20000 pcs.	4000 pcs.	H=2.0 mm
	EVQQ2		10000 pcs.	2000 pcs.	H=2.5 mm, 3.1 mm
3.0 mmx2.0 mm SMD Light Touch Switches	EVPAW		50000 pcs.	10000 pcs.	
3.0 mmx2.6 mm SMD Light Touch Switches	EVPAF		40000 pcs.	8000 pcs.	
3.5 mmx2.9 mm SMD Light Touch Switches	EVPAA		25000 pcs.	5000 pcs.	
4.7 mmx3.5 mm SMD Light Touch Switches	EVQP2/P9/3P2		20000 pcs.	4000 pcs.	
6.0 mmx3.5 mm SMD Light Touch Switches	EVQPE1/PN/5P		10000 pcs.	2000 pcs.	H=5.0 mm
			12500 pcs.	2500 pcs.	H=4.3 mm
3.5 mmx2.9 mm Side-operational SMD Light Touch Switches	EVQP7/P3/9P7		25000 pcs.	5000 pcs.	
3.5 mmx2.9 mm Side-operational Half Dive / SMD Light Touch Switches	EVPAN		35000 pcs.	7000 pcs.	
Small-sized Side-operational SMD Light Touch Switches	EVQPU		20000 pcs.	4000 pcs.	
2.8 mmx2.3 mm Side-operational Edge Mount Light Touch Switches	EVPAV		40000 pcs.	8000 pcs.	
4.5 mmx2.2 mm Side-operational Edge Mount Light Touch Switches	EVPAE		17500 pcs.	3500 pcs.	
6.2 mmx2.5 mm Side-operational Edge Mount Light Touch Switches	EVQP4		12500 pcs.	2500 pcs.	
6.1 mmx4.0 mm Side-operational SMD Light Touch Switches	EVQPS	Embossed Taping (Reel Pack)	16000 pcs.	4000 pcs.	
5N Type Light Touch Switches	EVQPA/PB	Polyethylene Bag (Bulk)	10000 pcs.	500 pcs.	
5N Type Side-operational Light Touch Switches	EVQPF		10000 pcs.	500 pcs.	
5N Type 2R Light Touch Switches	EVQ2	Radial Taping (Reel Pack)	10000 pcs.	1000 pcs.	
5N Type Side-operational 4R Light Touch Switches	EVQPC		7000 pcs.	700 pcs.	
Round Type 2R Light Touch Switches	EVQ11		25000 pcs.	2500 pcs.	
6.0 mmx3.5 mm Light Touch Switches	EVQPE	Polyethylene Bag (Bulk)	10000 pcs.	1000 pcs.	
6.0 mmx3.5 mm 2R Light Touch Switches	EVQPJ	Radial Taping (Reel Pack)	20000 pcs.	2000 pcs.	
Over Travel Light Touch Switches	EVQP0	Polyethylene Bag (Bulk)	10000 pcs.	500 pcs.	
4 mm Square Double-action SMD Light Touch Switches	EVPAH	Embossed Taping (Reel Pack)	40000 pcs.	8000 pcs.	
6 mm Square Thin Type Double-action SMD Light Touch Switches	EVQPR/Q0/3PR	Embossed Taping (Reel Pack)	25000 pcs.	5000 pcs.	
4.7 mmx3.5 mm Double-action Side-operational SMD Light Touch Switches	EVPAJ	Embossed Taping (Reel Pack)	25000 pcs.	5000 pcs.	
6.2 mmx3.7 mm Double-action Side-operational Edge Mount / SMD Light Touch Switches	EVQQ0	Embossed Taping (Reel Pack)	12500 pcs.	2500 pcs.	
6 mm Square Long Travel SMD Light Touch Switches	EVQP0/P1/9P	Embossed Taping (Reel Pack)	10000 pcs.	2000 pcs.	
6 mm Square Long Travel 2 terminals SMD Light Touch Switches	EVPAS	Embossed Taping (Reel Pack)	10000 pcs.	2000 pcs.	
6 mm Square Long Travel 2R Light Touch Switches	EVQPV	Radial Taping (Reel Pack)	25000 pcs.	2500 pcs.	
8 mm Square Long Travel SMD Light Touch Switches	EVQQ1	Embossed Taping (Reel Pack)	10000 pcs.	1000 pcs.	
8 mm Square Long Travel 2R Light Touch Switches	EVQQJ	Radial Taping (Reel Pack)	10000 pcs.	1000 pcs.	
10 mm Square Center Space Long Travel SMD Light Touch Switches	EVPAD	Embossed Taping (Reel Pack)	5000 pcs.	1000 pcs.	

Design and specifications are each subject to change without notice. Ask factory for the current technical specifications before purchase and/or use.
Should a safety concern arise regarding this product, please be sure to contact us immediately.

4 mm Square SMD Light Touch Switches

Type: **EVQP6/EVQ6P6/EVQ7P6/EVQ9P6**

■ Features

- External dimensions : 4.1 mm×4.1 mm
  Height :Without Push Plate 0.35 mm, With Push Plate 0.58 mm
  :Without Push Plate·With Ground Terminal 0.43 mm
- Long-life :1000000 cycles min.
  (Operating Force 1.6 N Type)
- Dust-proof structure

■ Recommended Applications

- Operating switches for portable electronic equipment
  (Mobile phones, Camcorders, Portable audio players, etc.).

■ Explanation of Part Numbers

1	2	3	4	5	6	7	8	9
E	V	Q						

Product Code — Height

4th, 5th, 6th	Type
P6□	· With Push Plate, Without Push Plate · Without Grounf Terminal
6P6 7P6 9P6	· Without Push Plate · With Grounf Terminal

■ Product Chart

Height	Without Push Plate H=0.35 mm	With Push Plate H=0.58 mm	Without Push Plate With Ground Terminal H=0.43 mm
Packaging / Operating Force	Embossed	Embossed	Embossed
1.0 N	—	—	EVQ7P6
1.6 N	EVQP6D	EVQP6L	EVQ6P6
2.4 N	EVQP6P	EVQP6Y	EVQ9P6

■ Specifications

Type		Snap action / Push-on type SPST	
		Without Push Plate	With Push Plate
Electrical	Rating	10 µA 2 Vdc to 20 mA 15 Vdc (Resistive load)	
	Contact Resistance	500 mΩ max.	
	Insulation Resistance	50 MΩ min.	
	Dielectric Withstanding Voltage	100 Vac for 1 minute	
	Bouncing	3 ms max. (ON) 10 ms max. (OFF)	
Mechanical	Operating Force	1.0 N, 1.6 N, 2.4 N	
	Travel	0.2 mm (EVQ7P6 : 0.15 mm)	
Endurance	Operating Life	1.0 N, 1.6 N : 1000000 cycles min. 2.4 N : 500000 cycles min.	
Operating Temperature		–20 °C to +70 °C	
Storage Temperature		–40 °C to +85 °C (Bulk) –20 °C to +60 °C (Taping)	
Minimum Quantity/Packing Unit		10000 pcs. Embossed Taping (Reel Pack)	
Quantity/Carton		50000 pcs.	

Note: Non washable

Design and specifications are each subject to change without notice. Ask factory for the current technical specifications before purchase and/or use.
Should a safety concern arise regarding this product, please be sure to contact us immediately.

00 Oct. 2012

■ Dimensions in mm (not to scale)

No. 1

EVQP6D
EVQP6P

(Embossed Taping)

Surface mount
For reflow soldering
Without push plate

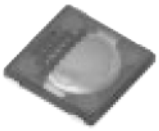

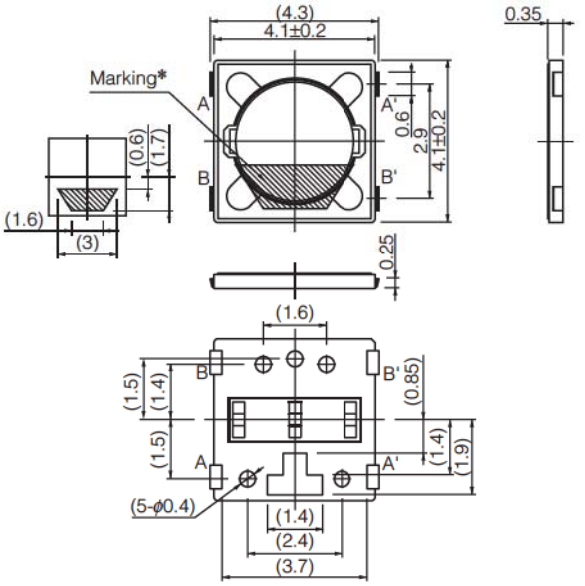

*Marking varies according to push force.

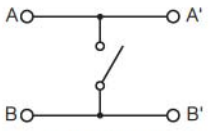

Circuit diagram

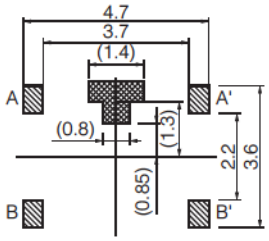

PWB land pattern for reference

Part of A-A' terminal is exposed at area.
Any land pattern or vias shall not be provided at area.

Part Numbers	Operating Force	Height	Operating Life
EVQP6DB35	1.6 N	0.35 mm	1000000 cycles
EVQP6PB35	2.4 N	0.35 mm	500000 cycles

No. 2

EVQP6L
EVQP6Y

(Embossed Taping)

Surface mount
For reflow soldering
With push plate

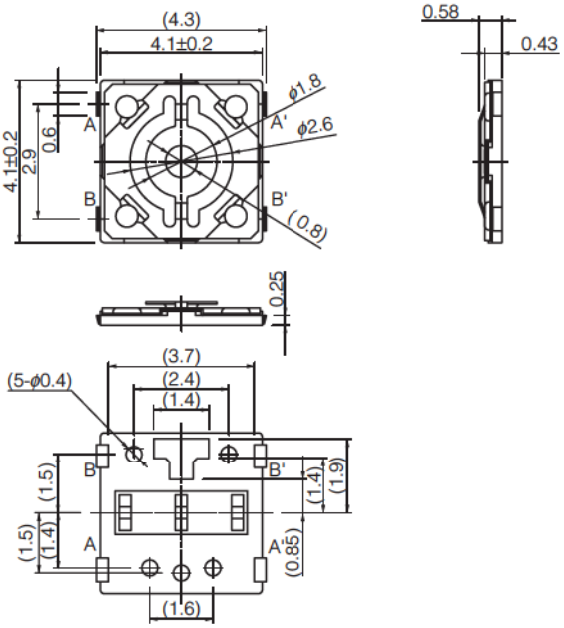

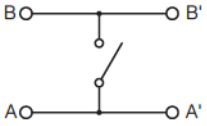

Circuit diagram

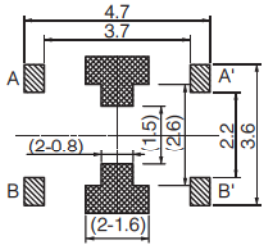

PWB land pattern for reference

Part of A-A' terminal is exposed at area.
Any land pattern or vias shall not be provided at area.

Part Numbers	Operating Force	Height	Operating Life
EVQP6LB55	1.6 N	0.58 mm	1000000 cycles
EVQP6YB55	2.4 N	0.58 mm	500000 cycles

Design and specifications are each subject to change without notice. Ask factory for the current technical specifications before purchase and/or use.
Should a safety concern arise regarding this product, please be sure to contact us immediately.

■ Dimensions in mm (not to scale)

No. 3

EVQ7P6
EVQ6P6
EVQ9P6

(Embossed Taping)

Surface mount
For reflow soldering
Without push plate
With Ground Terminal

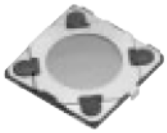

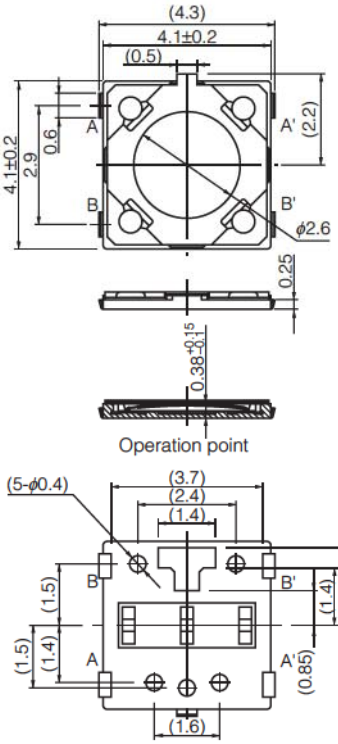

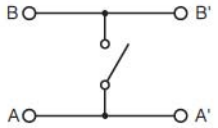

Circuit diagram

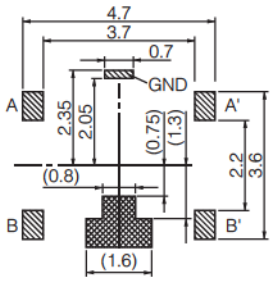

PWB land pattern for reference

Part of A-A' terminal is exposed at ■ area.
Any land pattern or vias shall not be provided at ■ area.

Part Numbers	Operating Force	Height	Operating Life
EVQ7P6B40	1.0 N	0.43 mm	1000000 cycles
EVQ6P6B40	1.6 N	0.43 mm	1000000 cycles
EVQ9P6B40	2.4 N	0.43 mm	500000 cycles

Design and specifications are each subject to change without notice. Ask factory for the current technical specifications before purchase and/or use.
Should a safety concern arise regarding this product, please be sure to contact us immediately.

■ Recommended Reflow Soldering Conditions

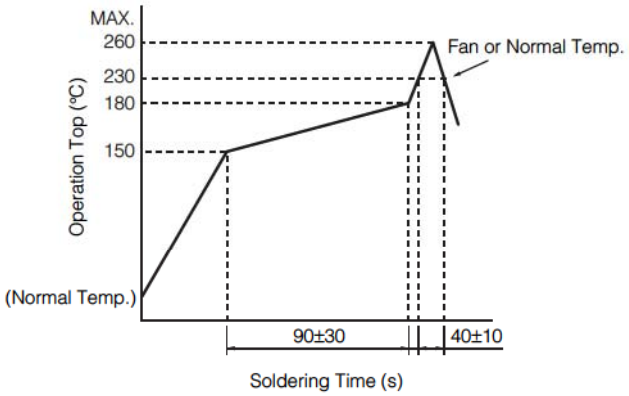

● Embossed Carrier Taping

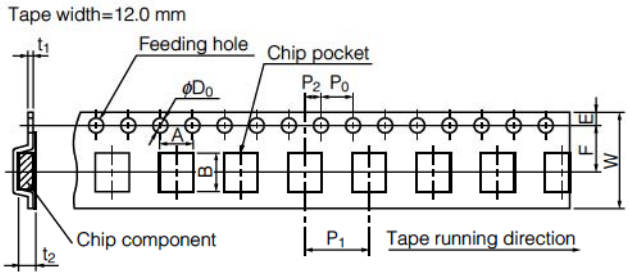

Unit: mm

Part No.	Height	A	B	W	F	E	P_1	P_2	P_0	D_0 Dia.	t_1	t_2
EVQP6	0.35/0.58	4.0±0.2	5.0±0.2	$12.0^{+0.3}_{-0.1}$	5.5±0.1	1.75±0.10	8.0±0.1	2.0±0.1	4.0±0.1	$1.5^{+0.1}_{-0}$	0.30±0.05	$0.5/0.7^{+0.2}_{-0.1}$
EVQ6P6 EVQ7P6 EVQ9P6	0.43											

● Standard Reel Dimensions in mm (not to scale)

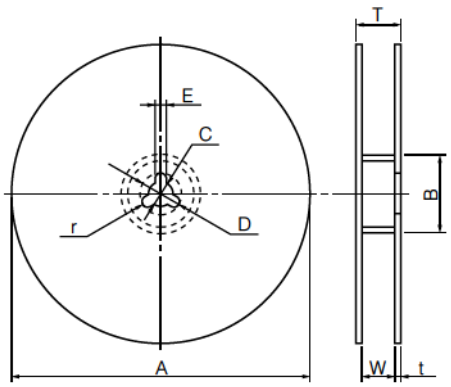

Item	A	B	C	D	E
Rate (mm)	φ380.0±2.0	φ80.0±1.0	φ13.0±0.5	φ21.0±1.0	2.0±0.5

Item	W	T	t	r
Rate (mm)	13.5±1.5	17.5±1.0	1.0 to 3.0	1.0±0.5

■ Recommended Shape of Test Pole

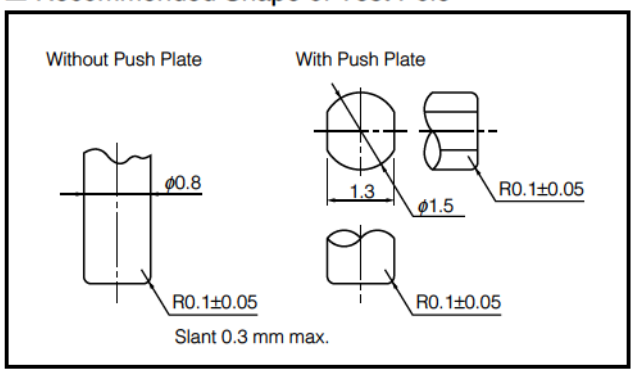

■ Recommended Operating Conditions

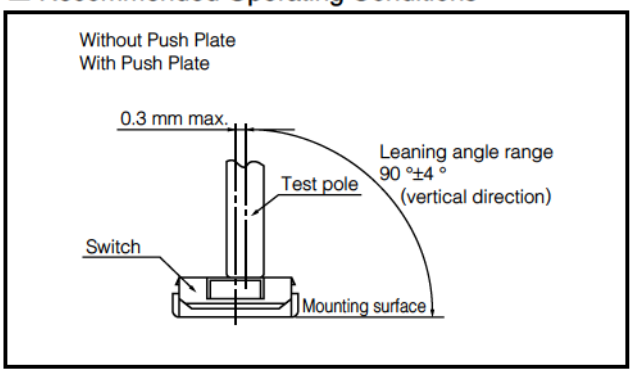

Design and specifications are each subject to change without notice. Ask factory for the current technical specifications before purchase and/or use.
Should a safety concern arise regarding this product, please be sure to contact us immediately.

4.5 mm Square SMD Light Touch Switches

Type: **EVQPQ**

■ Features

- External dimensions: 4.5 mm×4.5 mm, Height 0.55 mm
- Lightweight: 20 mg (1/2 compared with coventional type)

■ Recommended Applications

- Operation switches for portable electronic equipment (Camcorders, Portable audio players, etc.)

■ Explanation of Part Numbers

1	2	3	4	5	6	7	8	9
E	V	Q	P	Q		B	5	5
Product Code			Type				Height	

■ Specifications

Type		Snap action/Push-on type SPST
Electrical	Rating	10 μA 2 Vdc to 20 mA 15 Vdc (Resistive load)
	Contact Resistance	100 mΩ max.
	Insulation Resistance	50 MΩ min. (at 100 Vdc)
	Dielectric Withstanding Voltage	250 Vac for 1 minute
	Bouncing	3 ms max. (ON) 10 ms max. (OFF)
Mechanical	Operating Force	1.6 N±0.5 N 2.4 N±0.6 N
	Travel	0.2 mm±0.1 mm
Endurance	Operating Life	200000 cycles min. (1.6 N), 50000 cycles min. (2.4 N)
Operating Temperature		–20 °C to +70 °C
Storage Temperature		–40 °C to +85 °C (Bulk) –20 °C to +60 °C (Taping)
Minimum Quantity/Packing Unit		10000 pcs. Embossed Taping (Reel Pack)
Quantity/Carton		50000 pcs.

Note: Non washable

Design and specifications are each subject to change without notice. Ask factory for the current technical specifications before purchase and/or use.
Should a safety concern arise regarding this product, please be sure to contact us immediately.

■ Dimensions in mm (not to scale)

EVQPQ

(Embossed Taping)

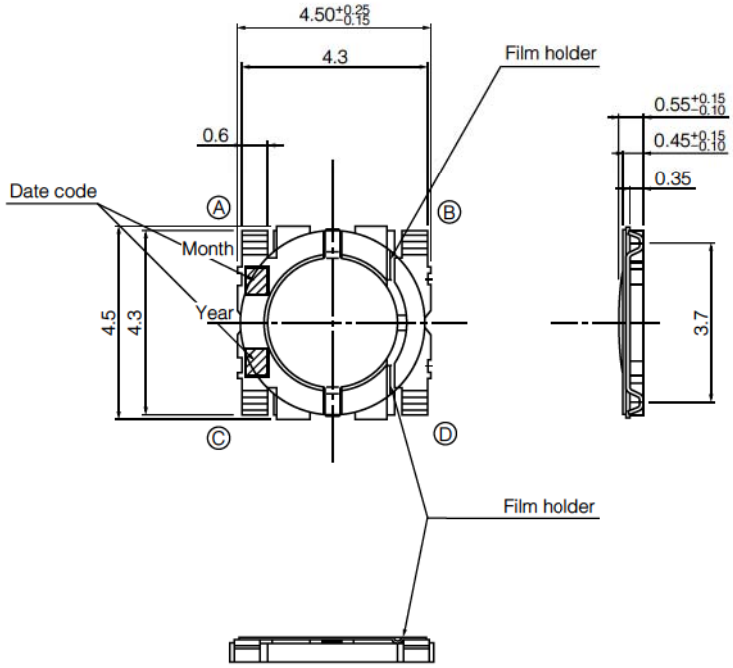

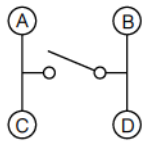

Circuit diagram

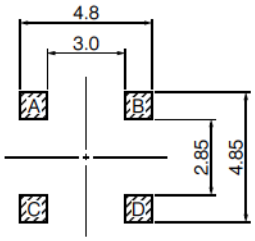

PWB land pattern for reference

Part Numbers	Operating Force	Height	Operating Life
EVQPQHB55	1.6 N	0.55 mm	200000 cycles
EVQPQMB55	2.4 N	0.55 mm	50000 cycles

■ Before using this product

- If the inclination of the actuator is widened by using soft materials, such as rubber, for the setting side of the operation section (connecting area between button and acturator), it may cause functional problems.

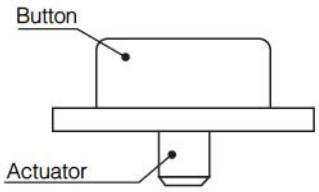

Design and specifications are each subject to change without notice. Ask factory for the current technical specifications before purchase and/or use.
Should a safety concern arise regarding this product, please be sure to contact us immediately.

■ Recommended Reflow Soldering Conditions

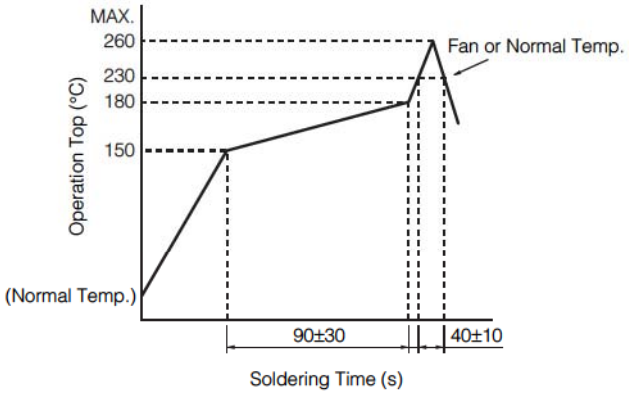

● Embossed Carrier Taping

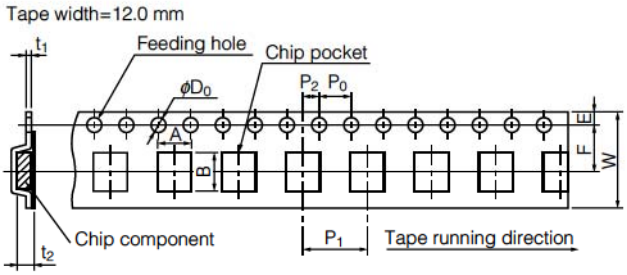

Unit: mm

Part No.	Height	A	B	W	F	E	P_1	P_2	P_0	D_0 Dia.	t_1	t_2
EVQPQ	0.55	$5.0^{+0.30}_{-0.25}$	$4.6^{+0.3}_{-0}$	12.0±0.1	5.5±0.1	1.75±0.10	8.0±0.1	2.0±0.1	4.0±0.1	$1.5^{+0.1}_{-0}$	0.30±0.05	$0.65^{+0.2}_{-0.1}$

● Standard Reel Dimensions in mm (not to scale)

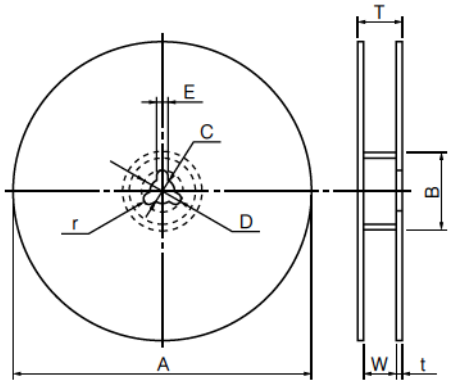

Item	A	B	C	D	E
Rate (mm)	φ370.0±2.0	φ50.0 min.	φ13.0±0.5	φ21.0±1.0	2.0±0.5

Item	W	T	t	r
Rate (mm)	14.0±1.5	—	1.0 to 3.0	1.0±0.5

■ Recommended Shape of Test Pole

for Reflow soldering type

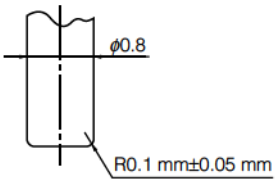

■ Recommended Operating Conditions

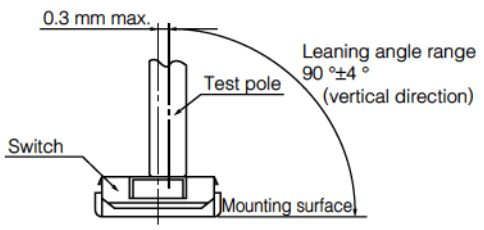

Design and specifications are each subject to change without notice. Ask factory for the current technical specifications before purchase and/or use.
Should a safety concern arise regarding this product, please be sure to contact us immediately.

4.9 mm Square SMD Light Touch Switches

Type: **EVQPL/EVQ3PL**
EVQ5PL/EVQPT

■ Features

- External dimensions : 4.9 mm×4.9 mm,
  Height: 0.8 mm(Without push plate), 1.5 mm(With push plate)

■ Recommended Applications

- Operation switches for portable electronic equipment (Notebook PC, Camcorders, Portable audio players, etc.)
- Operation switches for car audio systems

■ Explanation of Part Numbers

1	2	3	4	5	6	7	8	9
E	V	Q	P	L		A		
Product Code			Type				Height	

■ Product Chart

Height	H=0.8 mm	H=1.5 mm (With Push Plate)
Packaging / Operating Force	Embossed	Embossed
1.0 N	EVQPLB	EVQPLD, EVQPT5
1.6 N	EVQPLF	EVQPLH, EVQPT9
2.6 N	EVQPLK	EVQPLM
3.5 N	EVQ5PL	EVQ3PL

■ Specifications

Type		Snap action/Push-on type SPST	
Electrical	Rating	10 μA 2 Vdc to 20 mA 15 Vdc (Resistive load)	
	Contact Resistance	50 mΩ max.	
	Insulation Resistance	50 MΩ min. (at 100 Vdc)	
	Dielectric Withstanding Voltage	250 Vac for 1 minute	
	Bouncing	3 ms max. (ON) 8 ms max. (OFF)	
Mechanical	Operating Force	1.0 N±0.5 N 1.6 N±0.5 N	2.6 N±0.6 N 3.5 N±1.0 N
	Travel	0.25 mm $^{+0.10}_{-0.20}$ mm	
Endurance	Operating Life	500000 cycles min.	200000 cycles min.
Operating Temperature		−20 °C to +70 °C	
Storage Temperature		−40 °C to +85 °C (Bulk) −20 °C to +60 °C (Taping)	
Minimum Quantity/Packing Unit		5000 pcs. Embossed Taping (Reel Pack)	
Quantity/Carton		25000 pcs.	

Note: Non washable

Design and specifications are each subject to change without notice. Ask factory for the current technical specifications before purchase and/or use.
Should a safety concern arise regarding this product, please be sure to contact us immediately.

00 Oct. 2012

■ Dimensions in mm (not to scale)

No. 1

EVQPLB
EVQPLF
EVQPLK
EVQ5PL

(Embossed Taping)

Surface mount
For reflow soldering
Without push plate

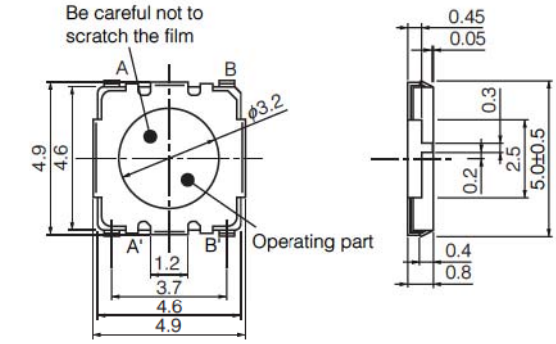

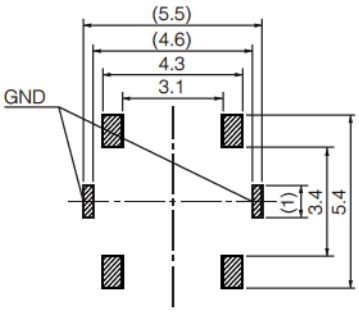

PWB land pattern for reference

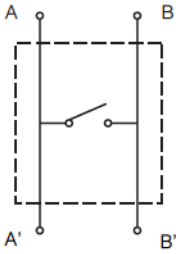

Circuit diagram

Part Numbers	Operating Force	Height	Operating Life
EVQPLBA08	1.0 N	0.8 mm	500000 cycles
EVQPLFA08	1.6 N	0.8 mm	500000 cycles
EVQPLKA08	2.6 N	0.8 mm	200000 cycles
EVQ5PLA08	3.5 N	0.8 mm	200000 cycles

No. 2

EVQPLD/PT5
EVQPLH/PT9
EVQPLM
EVQ3PL

(Embossed Taping)

Surface mount
For reflow soldering
With push plate

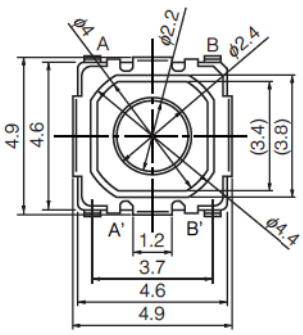

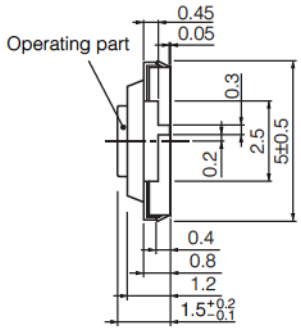

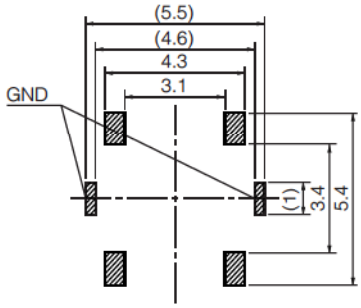

PWB land pattern for reference

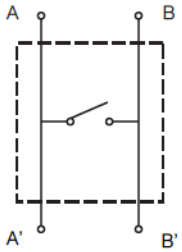

Circuit diagram

Part Numbers	Operating Force	Height	Operating Life
EVQPLDA15/PT5A15	1.0 N	1.5 mm	500000/2000000 cycles
EVQPLHA15/PT9A15	1.6 N	1.5 mm	500000/2000000 cycles
EVQPLMA15	2.6 N	1.5 mm	200000 cycles
EVQ3PLA15	3.5 N	1.5 mm	200000 cycles

Design and specifications are each subject to change without notice. Ask factory for the current technical specifications before purchase and/or use.
Should a safety concern arise regarding this product, please be sure to contact us immediately.

■ Recommended Reflow Soldering Conditions

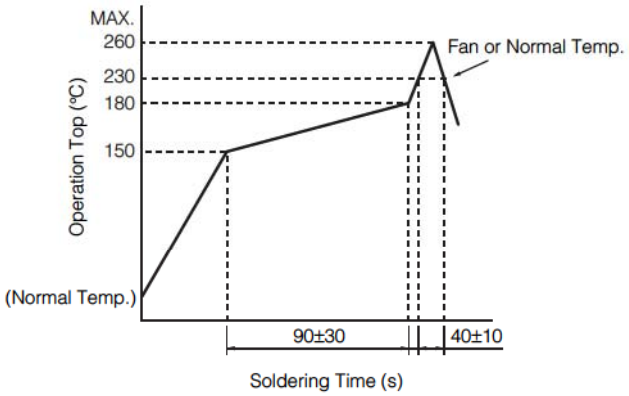

● Embossed Carrier Taping

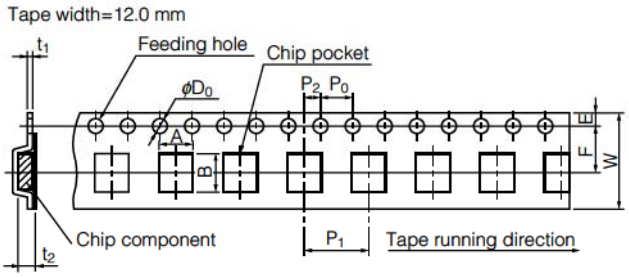

Unit: mm

Part No.	Height	A	B	W	F	E	P_1	P_2	P_0	D_0 Dia.	t_1	t_2
EVQPL EVQ3PL EVQ5PL EVQPT	0.8/1.5	5.0±0.2	5.0±0.2	12.0±0.3	5.5±0.1	1.75±0.10	8.0±0.1	2.0±0.1	4.0±0.1	$1.5^{+0.1}_{-0}$	0.35±0.05	1.0/1.7±0.2

● Standard Reel Dimensions in mm (not to scale)

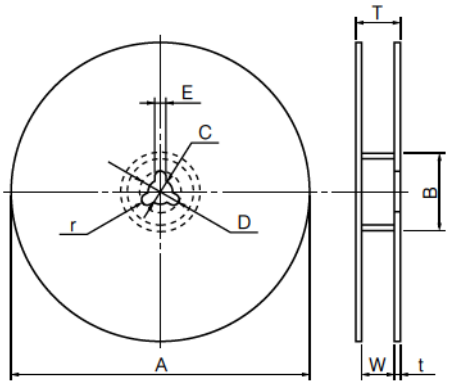

Item	A	B	C	D	E
Rate (mm)	φ370.0±2.0	φ50.0 min.	φ13.0±0.5	φ21.0±1.0	2.0±0.5

Item	W	T	t	r
Rate (mm)	14.0±1.5	—	1.0 to 3.0	1.0±0.5

■ Recommended Shape of Test Pole

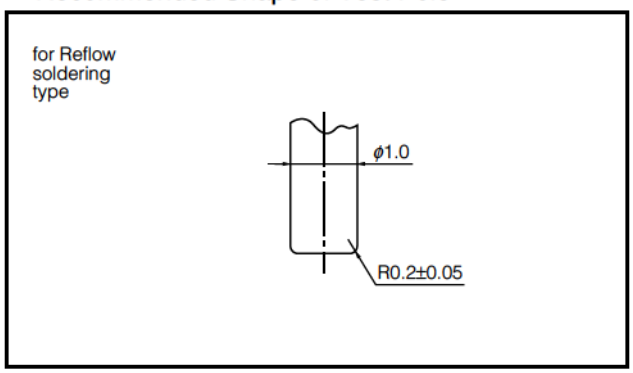

■ Recommended Operating Conditions

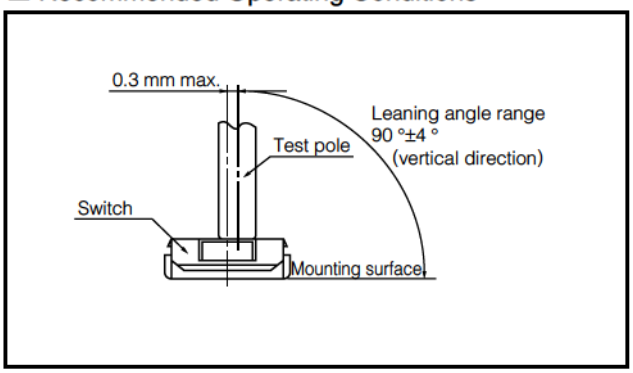

Design and specifications are each subject to change without notice. Ask factory for the current technical specifications before purchase and/or use.
Should a safety concern arise regarding this product, please be sure to contact us immediately.

6 mm Square Thin Type SMD Light Touch Switches

Type: **EVQP0**
EVQQ2

■ Features

- External dimensions : 6.5 mm×6.0 mm, Height 1.8 mm (Excluding the push plate)
- With or without ground terminal, height, operating force
- Overstroke travel

■ Recommended Applications

- Operating switches for other electronic equipment
- Operation switches for PC mouse
- Car audio systems

■ Explanation of Part Numbers

1	2	3	4	5	6	7	8	9
E	V	Q	P/Q	0/2				
Product Code						Height		Push Plate Color

4th & 5th	Type
P0	Overstroke travel
Q2	Short push travel

■ Specifications

Travel Type		Short Push Travel	Overstroke Travel
Type		Snap action/Push-on type SPST	
Electrical	Rating	10 μA 2 Vdc to 20 mA 15 Vdc (Resistive load)	
	Contact Resistance	100 mΩ max.	
	Insulation Resistance	100 MΩ min. (at 100 Vdc)	
	Dielectric Withstanding Voltage	250 Vac for 1 minute	
	Bouncing	10 ms max. (ON, OFF)	
Mechanical	Operating Force	0.5 N, 1.0 N, 1.3 N, 1.6 N, 2.6 N, 3.5 N	0.6 N, 1.0 N
	Travel	0.25 mm (0.2 mm : 0.5N, 1.0N)	0.3 mm
Endurance	Operating Life	0.5 N : 2000000 cycles min. 1.0 N, 1.3 N, 1.6 N : 1000000 cycles min. 2.6 N : 200000 cycles min. 3.5 N : 100000 cycles min.	0.6 N : 2000000 cycles min. 1.0 N : 1000000 cycles min.
Operating Temperature		–40 °C to +85 °C	
Storage Temperature		–40 °C to +85 °C (Bulk) –20 °C to +60 °C (Taping)	
Minimum Quantity/Packing Unit		H=2.0 mm	4000 pcs. Embossed Taping (Reel Pack)
		H=2.5 mm, 3.1 mm	2000 pcs. Embossed Taping (Reel Pack)
Quantity/Carton		H=2.0 mm	20000 pcs.
		H=2.5 mm, 3.1 mm	10000 pcs.

Note: Non washable

Design and specifications are each subject to change without notice. Ask factory for the current technical specifications before purchase and/or use.
Should a safety concern arise regarding this product, please be sure to contact us immediately.

■ Dimensions in mm (not to scale)

No. 1

EVQP0

Overstroke travel : 0.35 mm
With J-bent terminals

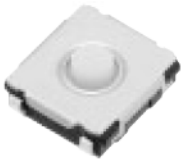

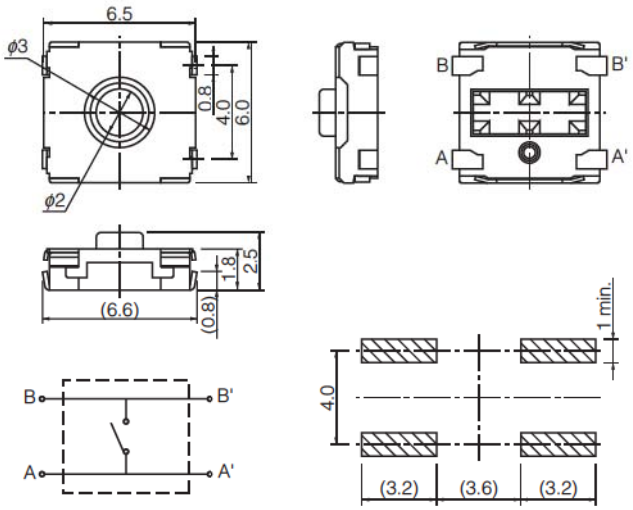

Circuit Diagram

PWB land pattern for reference

Part Numbers	Operating Force	Height	Push Plate Color	Ground Terminal	Operating Life
EVQP0N02B	0.6 N	2.5 mm	Blue	Without	2000000 cycles
EVQP0P02B	0.6 N	2.5 mm	Blue	With	2000000 cycles
EVQP0Q02Q	1.0 N	2.5 mm	Gray	Without	1000000 cycles
EVQP0S02Q	1.0 N	2.5 mm	Gray	With	1000000 cycles

Design and specifications are each subject to change without notice. Ask factory for the current technical specifications before purchase and/or use.
Should a safety concern arise regarding this product, please be sure to contact us immediately.

■ Dimensions in mm (not to scale)

No. 2

EVQQ2

Short push travel : 0.25 mm
With J-bent terminals

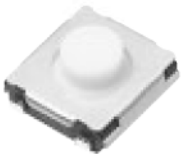

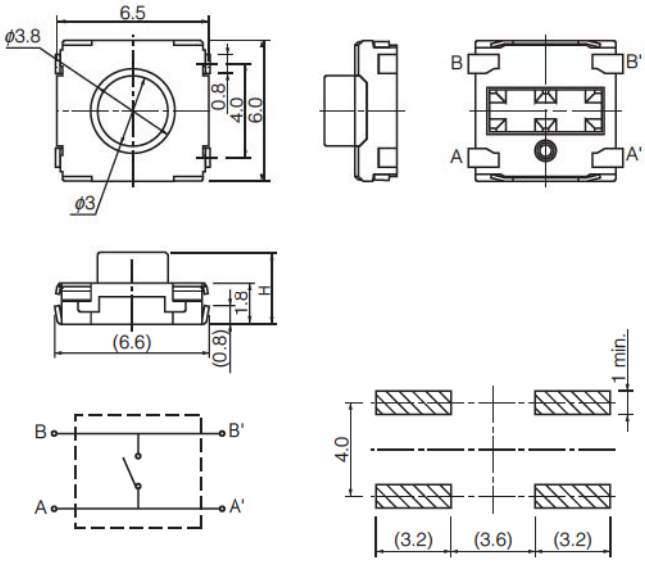

Height H
2.0±0.2
2.5±0.2
3.1±0.2

Circuit Diagram

PWB land pattern for reference

Part Numbers	Operating Force	H=Height	Push Plate Color	Ground Terminal	Operating Life
EVQQ2B01W	0.5 N	2.0 mm	White	Without	2000000 cycles
EVQQ2B02W	0.5 N	2.5 mm	White	Without	2000000 cycles
EVQQ2B03W	0.5 N	3.1 mm	White	Without	2000000 cycles
EVQQ2D01W	0.5 N	2.0 mm	White	With	2000000 cycles
EVQQ2D02W	0.5 N	2.5 mm	White	With	2000000 cycles
EVQQ2D03W	0.5 N	3.1 mm	White	With	2000000 cycles
EVQQ2F01W	1.0 N	2.0 mm	White	Without	1000000 cycles
EVQQ2F02W	1.0 N	2.5 mm	White	Without	1000000 cycles
EVQQ2F03W	1.0 N	3.1 mm	White	Without	1000000 cycles
EVQQ2H01W	1.0 N	2.0 mm	White	With	1000000 cycles
EVQQ2H02W	1.0 N	2.5 mm	White	With	1000000 cycles
EVQQ2H03W	1.0 N	3.1 mm	White	With	1000000 cycles
EVQQ2K01W	1.3 N	2.0 mm	White	Without	1000000 cycles
EVQQ2K02W	1.3 N	2.5 mm	White	Without	1000000 cycles
EVQQ2K03W	1.3 N	3.1 mm	White	Without	1000000 cycles
EVQQ2M01W	1.3 N	2.0 mm	White	With	1000000 cycles
EVQQ2M02W	1.3 N	2.5 mm	White	With	1000000 cycles
EVQQ2M03W	1.3 N	3.1 mm	White	With	1000000 cycles
EVQQ2P01W	1.6 N	2.0 mm	White	Without	1000000 cycles
EVQQ2P02W	1.6 N	2.5 mm	White	Without	1000000 cycles
EVQQ2P03W	1.6 N	3.1 mm	White	Without	1000000 cycles
EVQQ2S01W	1.6 N	2.0 mm	White	With	1000000 cycles
EVQQ2S02W	1.6 N	2.5 mm	White	With	1000000 cycles
EVQQ2S03W	1.6 N	3.1 mm	White	With	1000000 cycles
EVQQ2U01W	2.6 N	2.0 mm	White	Without	200000 cycles
EVQQ2U02W	2.6 N	2.5 mm	White	Without	200000 cycles
EVQQ2U03W	2.6 N	3.1 mm	White	Without	200000 cycles
EVQQ2W01W	2.6 N	2.0 mm	White	With	200000 cycles
EVQQ2W02W	2.6 N	2.5 mm	White	With	200000 cycles
EVQQ2W03W	2.6 N	3.1 mm	White	With	200000 cycles
EVQQ2Y01W	3.5 N	2.0 mm	White	Without	100000 cycles
EVQQ2Y02W	3.5 N	2.5 mm	White	Without	100000 cycles
EVQQ2Y03W	3.5 N	3.1 mm	White	Without	100000 cycles
EVQQ2201W	3.5 N	2.0 mm	White	With	100000 cycles
EVQQ2202W	3.5 N	2.5 mm	White	With	100000 cycles
EVQQ2203W	3.5 N	3.1 mm	White	With	100000 cycles

Design and specifications are each subject to change without notice. Ask factory for the current technical specifications before purchase and/or use.
Should a safety concern arise regarding this product, please be sure to contact us immediately.

■ Recommended Reflow Soldering Conditions

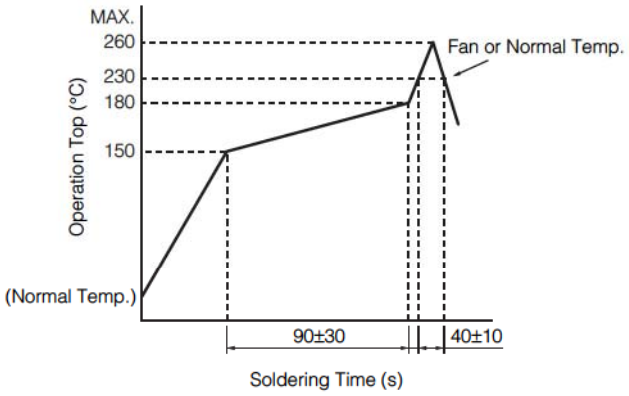

● Embossed Carrier Taping

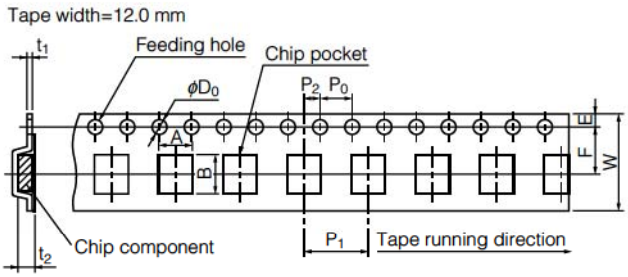

Unit: mm

Part No.	Height	A	B	W	F	E	P1	P2	P0	D0 Dia	t1	t2
EVQQ2	2.0	6.7±0.2	7.4±0.2	12.0±0.3	5.5±0.1	1.75±0.10	8.0±0.1	2.0±0.1	4.0±0.1	$1.5^{+0.1}_{-0}$	0.30±0.05	2.2±0.2
	2.5/3.1											3.2±0.2
EVQP0	2.5											2.8±0.2

● Standard Reel Dimensions in mm (not to scale)

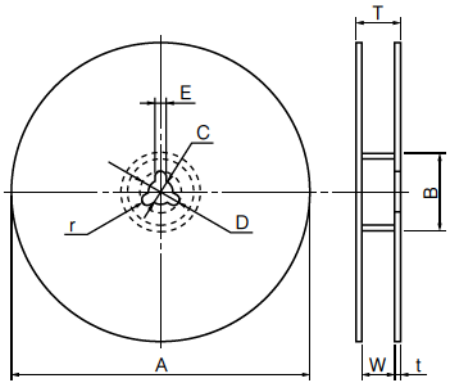

Item	A	B	C	D	E
Rate (mm)	φ380.0±2.0	φ80.0±1.0	φ13.0±0.5	φ21.0±1.0	2.0±0.5

Item	W	T	t	r
Rate (mm)	13.5±1.0	17.5±1.0	—	—

■ Recommended Shape of Test Pole

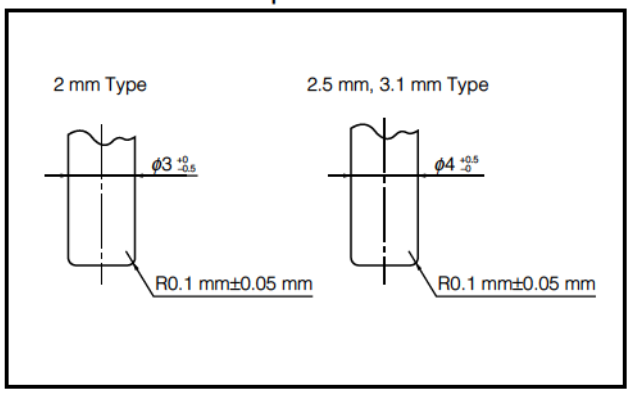

■ Recommended Operating Conditions

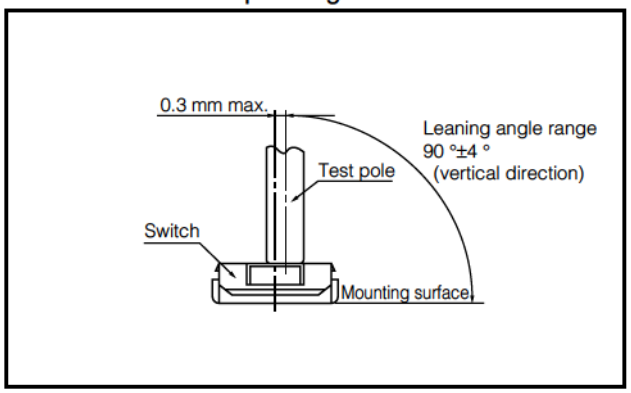

Design and specifications are each subject to change without notice. Ask factory for the current technical specifications before purchase and/or use.
Should a safety concern arise regarding this product, please be sure to contact us immediately.

3.0 mm×2.0 mm SMD Light Touch Switches

Type: **EVPAW**

■ Features

- External dimensions: 3.0 mm×2.0 mm, Height 0.6 mm
- High operability
  Equipped with an actuator (push plate)

■ Recommended Applications

- Operation switches for portable electronic equipment
  (Mobile phone, Portable audio)

■ Explanation of Part Numbers

1	2	3	4	5	6	7	8	9
E	V	P	A	W				
Product Code			Type				Height	

■ Specifications

Type		Snap action/Push-on type SPST
Electrical	Rating	10 μA 2 Vdc to 20 mA 15 Vdc (Resistive load)
	Contact Resistance	500 mΩ max.
	Insulation Resistance	50 MΩ min. (at 100 Vdc)
	Dielectric Withstanding Voltage	250 Vac for 1 minute
	Bouncing	10 ms max. (ON, OFF)
Mechanical	Operating Force	1.6 N, 2.4 N, 3.3 N
	Travel	1.6 N, 2.4 N : 0.13 mm 3.3 N : 0.15 mm
Endurance	Operating Life	300000 cycles min.
Operating Temperature		−40 °C to +85 °C
Storage Temperature		−40 °C to +85 °C (Bulk) −20 °C to +60 °C (Taping)
Minimum Quantity/Packing Unit		10000 pcs. Embossed Taping (Reel Pack)
Quantity/Carton		50000 pcs.

Note: Non washable

Design and specifications are each subject to change without notice. Ask factory for the current technical specifications before purchase and/or use.
Should a safety concern arise regarding this product, please be sure to contact us immediately.

NEW

■ Dimensions in mm (not to scale)

EVPAW

(Embossed Taping)

General dimension tolerance : ± 0.05
( )dimensions are reference dimensions.

This reference specifications are subject to change.

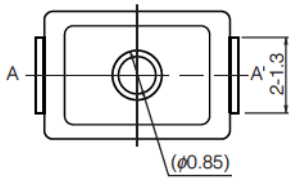

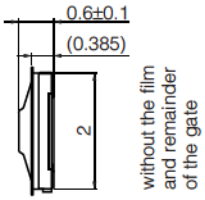

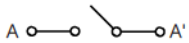

Circuit diagram

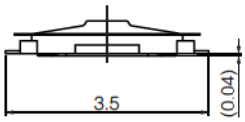

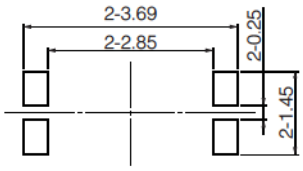

Stencil mask plan

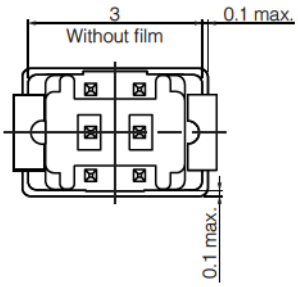

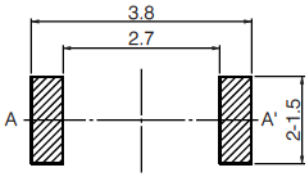

PWB land pattern for reference

Soldering thickness t=0.08±0.01

✱ If you design different stencil mask and land pattern, or apply different soldering thickness compared with our recommended pattern as described above, please ask us in advance.

Part Numbers	Operating Force	Height	Operating Life
EVPAWBA2A	1.6 N	0.6 mm	300000 cycles
EVPAWCA2A	2.4 N	0.6 mm	300000 cycles
EVPAWEA2A	3.3 N	0.6 mm	300000 cycles

Design and specifications are each subject to change without notice. Ask factory for the current technical specifications before purchase and/or use.
Should a safety concern arise regarding this product, please be sure to contact us immediately.

■ Recommended Reflow Soldering Conditions

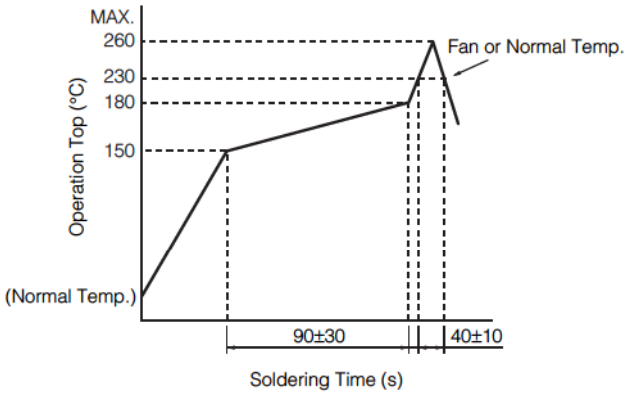

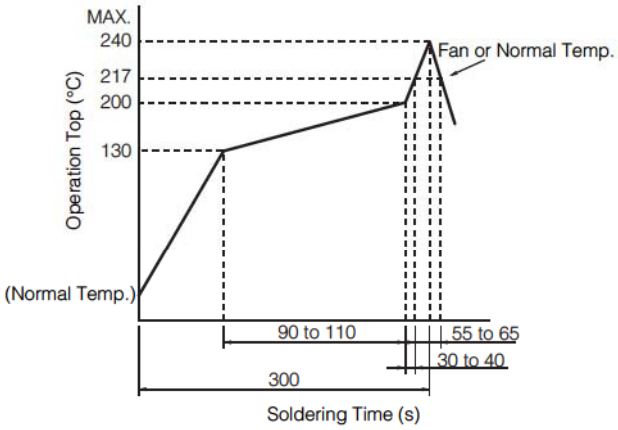

✱Reflow temperature may vary by location even in the same reflow condition. Please check the reflow temperature at terminals and at the top of a switch to make sure the both temperatures are withiin the specification. If even one of them is out of the specifications, please adjust.

● Embossed Carrier Taping

Tape width=12.0 mm

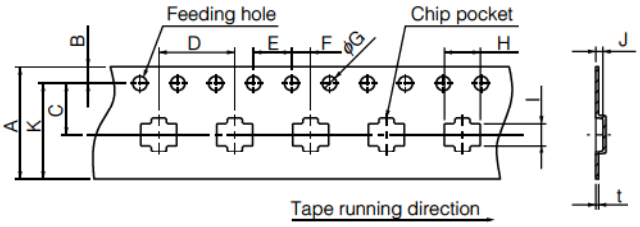

Taping condition : Lack of products in the middle of taping should be one MAX, but total quantity specified in the specifications should be secured.
Peeling off strength of top tape : It should be within 0.2N to 1. ON at 165 degree in peeling off angle.
Joint of carrier tape : One joint per one reel may exist.

Unit: mm

Part No.	Height	A	B	C	D	E	F	G	H	I	J	K	t
EVPAW	0.6	12.0±0.3	1.75±0.10	5.5±0.1	8.0±0.1	4.0±0.1	2.0±0.1	1.5±0.3	3.8±0.2	2.3±0.2	0.75±0.20	(10.25)	$0.3^{+0.15}_{-0.10}$

● Standard Reel Dimensions in mm (not to scale)

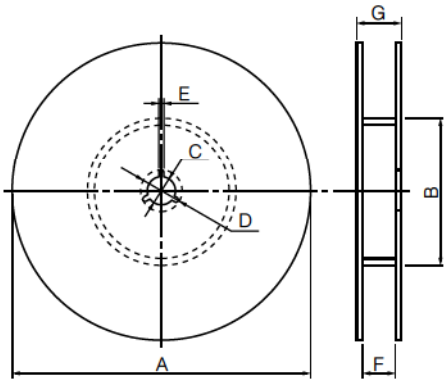

Item	A	B	C	D	E
Rate (mm)	φ380.0±2.0	φ80.0±1.0	φ13.0±0.5	φ21.0±1.0	2.0±0.5

Item	F	G
Rate (mm)	13.5±1.0	17.5±1.0

Design and specifications are each subject to change without notice. Ask factory for the current technical specifications before purchase and/or use.
Should a safety concern arise regarding this product, please be sure to contact us immediately.

3.0 mm×2.6 mm SMD Light Touch Switches

Type: **EVPAF**

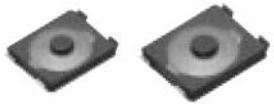

■ Features

- External dimensions: 3.0 mm×2.6 mm, Height 0.65 mm
- High operability
  Equipped with an actuator (push plate)
- Low temperature use

■ Recommended Applications

- Operation switches for portable electronic equipment
  (Mobile phone, Portable audio)

■ Explanation of Part Numbers

1	2	3	4	5	6	7	8	9
E	V	P	A	F				
Product Code			Type				Height	

■ Specifications

Type		Snap action/Push-on type SPST
Electrical	Rating	10 μA 2 Vdc to 20 mA 15 Vdc (Resistive load)
	Contact Resistance	500 mΩ max.
	Insulation Resistance	50 MΩ min. (at 100 Vdc)
	Dielectric Withstanding Voltage	250 Vac for 1 minute
	Bouncing	10 ms max. (ON, OFF)
Mechanical	Operating Force	1.3 N, 1.6 N, 2.4 N, 3.4 N
	Travel	0.15 mm
Endurance	Operating Life	1.3 N, 1.6 N, 3.4 N : 100000 cycles min., 2.4 N : 500000 cycles min.
Operating Temperature		−40 °C to +85 °C
Storage Temperature		−40 °C to +85 °C (Bulk) −20 °C to +60 °C (Taping)
Minimum Quantity/Packing Unit		8000 pcs. Embossed Taping (Reel Pack)
Quantity/Carton		40000 pcs.

Note: Non washable

Design and specifications are each subject to change without notice. Ask factory for the current technical specifications before purchase and/or use.
Should a safety concern arise regarding this product, please be sure to contact us immediately.

■ Dimensions in mm (not to scale)

No. 1

EVPAF

(Embossed Taping)

With J-bent terminals

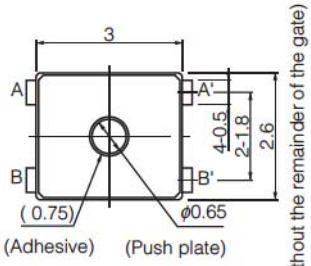

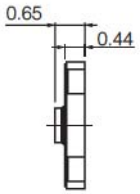

Circuit diagram

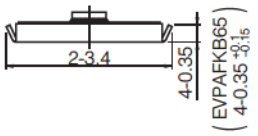

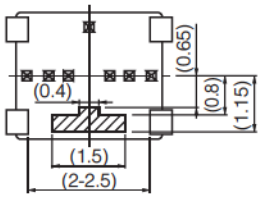

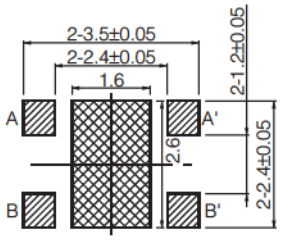

PWB land pattern for reference

Part of A-A' terminal is exposed at area.
Any land pattern or vias shall not be provided at area.

Part Numbers	Operating Force	Height	Operating Life
EVPAFKB65	1.3 N	0.65 mm	100000 cycles
EVPAFFB65	1.6 N	0.65 mm	100000 cycles

No. 2

EVPAF

(Embossed Taping)

With J-bent terminals

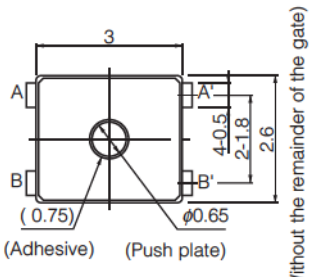

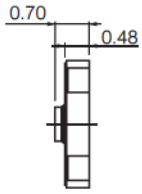

Circuit diagram

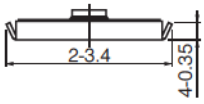

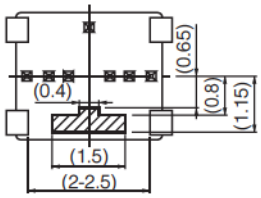

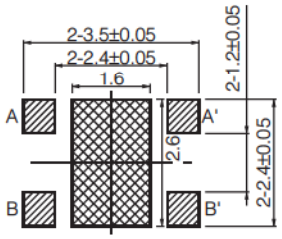

PWB land pattern for reference

Part of A-A' terminal is exposed at area.
Any land pattern or vias shall not be provided at area.

Part Numbers	Operating Force	Height	Operating Life
EVPAF5B70	3.4 N	0.7 mm	100000 cycles
EVPAF7B70	2.4 N	0.7 mm	500000 cycles

Design and specifications are each subject to change without notice. Ask factory for the current technical specifications before purchase and/or use.
Should a safety concern arise regarding this product, please be sure to contact us immediately.

No. 3

EVPAF

Low profile
(Embossed Taping)

With J-bent terminals

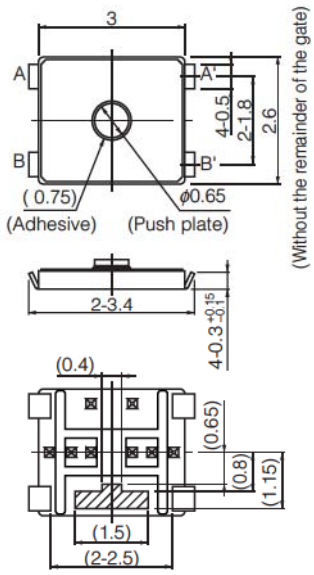

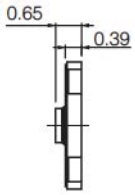

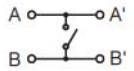

Circuit diagram

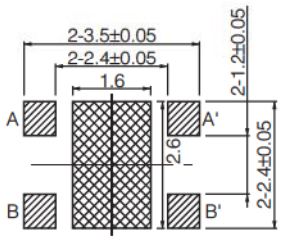

PWB land pattern for reference

Part of A-A' terminal is exposed at area.
Any land pattern or vias shall not be provided at area.

Part Numbers	Operating Force	Height	Operating Life
EVP0AFB65	1.6 N	0.65 mm	500000 cycles
EVPAF7B65	2.4 N	0.65 mm	500000 cycles
EVPAF5B65	3.4 N	0.65 mm	100000 cycles

■ Recommended Reflow Soldering Conditions

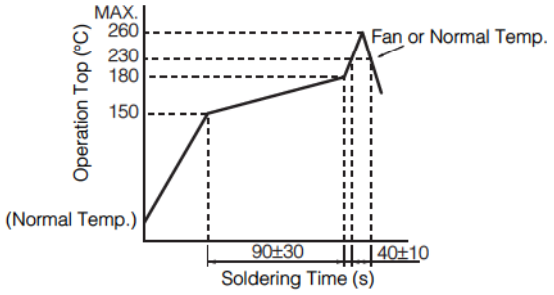

● Embossed Carrier Taping

Tape width=12.0 mm

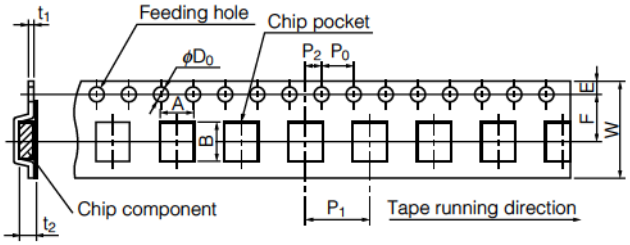

Unit: mm

Part No.	Height	A	B	W	F	E	P1	P2	P0	D0 Dia	t1	t2
EVPAF EVP0AF	0.65/0.70	3.75±0.2	2.95±0.2	12.0±0.3	5.5±0.1	1.75±0.1	8.0±0.1	2.0±0.1	4.0±0.1	1.5±0.3	0.3±0.1	0.8±0.2

● Standard Reel Dimensions in mm (not to scale)

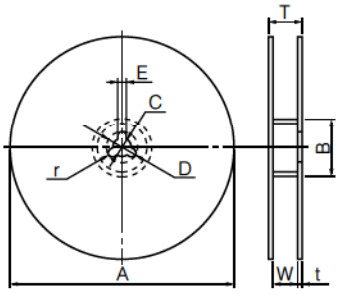

Item	A	B	C	D	E
Rate (mm)	φ380.0±2.0	φ80.0±1.0	φ13.0±0.5	φ21.0±1.0	2.0±0.5

Item	W	T	t	r
Rate (mm)	13.5±1.0	17.5±1.0	–	–

■ Recommended Shape of Test Pole

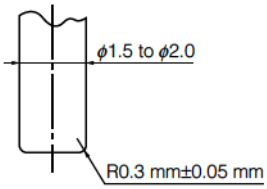

Design and specifications are each subject to change without notice. Ask factory for the current technical specifications before purchase and/or use.
Should a safety concern arise regarding this product, please be sure to contact us immediately.

3.5 mm×2.9 mm SMD Light Touch Switches

Type: **EVPAA**

■ Features

- External dimensions : 3.5 mm×2.9 mm, Height 1.7 mm
- High operating force available
  (Operating force : 5.0 N max.)
- Optional ground terminal

■ Recommended Applications

- Operation switches for portable electronic equipment
  (Mobile phones, Digital still cameras, etc.)
- Operating switches for keyless entry systems

■ Explanation of Part Numbers

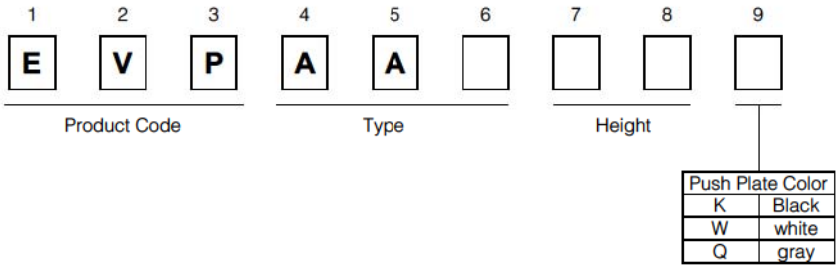

■ Specifications

Type		Snap action/Push-on type SPST
Electrical	Rating	10 µA 2 Vdc to 20 mA 15 Vdc (Resistive load)
	Contact Resistance	100 mΩ max.
	Insulation Resistance	100 MΩ min. (at 100 Vdc)
	Dielectric Withstanding Voltage	250 Vac for 1 minute
	Bouncing	10 ms max. (ON, OFF)
Mechanical	Operating Force	1.0 N, 1.6 N, 2.4 N, 3.5 N, 5.0 N
	Travel	0.15 mm±0.1 mm
Endurance	Operating Life	1000000 cycles min. (1.0 N) 200000 cycles min. (1.6 N, 2.4 N, 3.5 N) 100000 cycles min. (5.0 N)
Operating Temperature		−40 °C to +85 °C
Storage Temperature		−40 °C to +85 °C (Bulk) −20 °C to +60 °C (Taping)
Minimum Quantity/Packing Unit		5000 pcs. Embossed Taping (Reel Pack)
Quantity/Carton		25000 pcs.

Note: Non washable

Design and specifications are each subject to change without notice. Ask factory for the current technical specifications before purchase and/or use.
Should a safety concern arise regarding this product, please be sure to contact us immediately.

■ Dimensions in mm (not to scale)

EVPAA

(Embossed Taping)

Thickness : 1.7 mm

With J-bent terminals

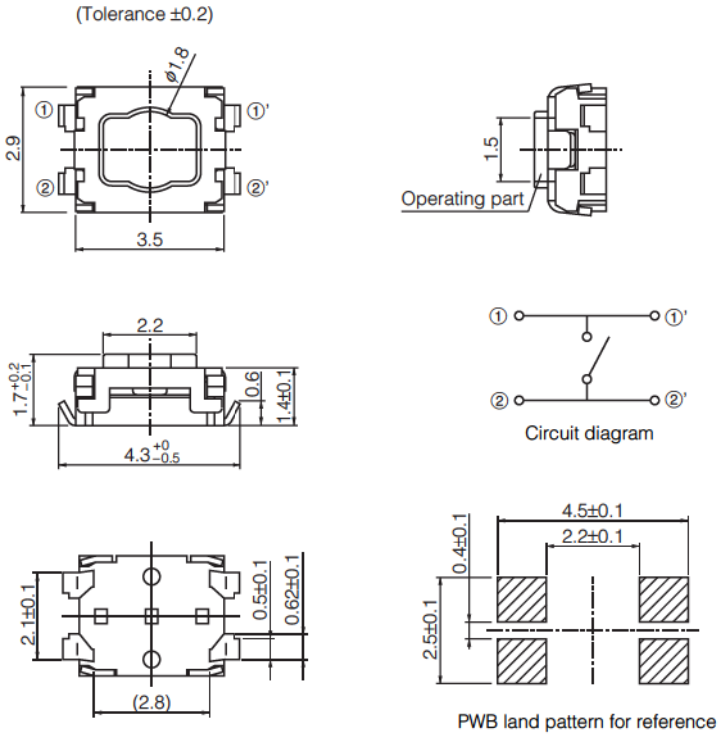

Part Numbers	Ground Terminal	Operating Force	Push Plate Color	Operating Life
EVPAA002K	Without	1.0 N	Black	1000000 cycles
EVPAA102K	With	1.0 N	Black	1000000 cycles
EVPAA202K	Without	1.6 N	Black	200000 cycles
EVPAA302K	With	1.6 N	Black	200000 cycles
EVPAA402W	Without	2.4 N	White	200000 cycles
EVPAA502W	With	2.4 N	White	200000 cycles
EVPAA602W	Without	3.5 N	White	200000 cycles
EVPAA702W	With	3.5 N	White	200000 cycles
EVPAA802Q	Without	5.0 N	Grey	100000 cycles
EVPAA902Q	With	5.0 N	Grey	100000 cycles

Design and specifications are each subject to change without notice. Ask factory for the current technical specifications before purchase and/or use.
Should a safety concern arise regarding this product, please be sure to contact us immediately.

■ Recommended Reflow Soldering Conditions

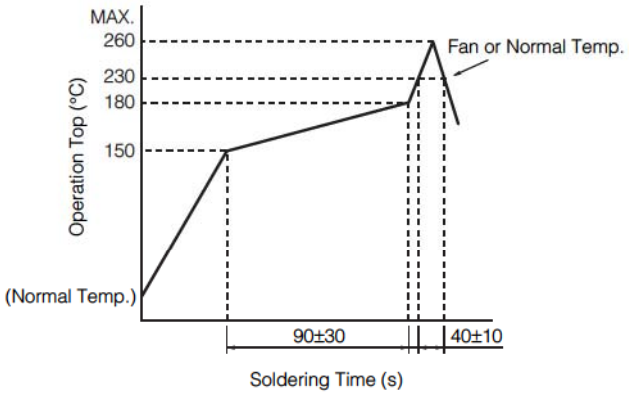

● Embossed Carrier Taping

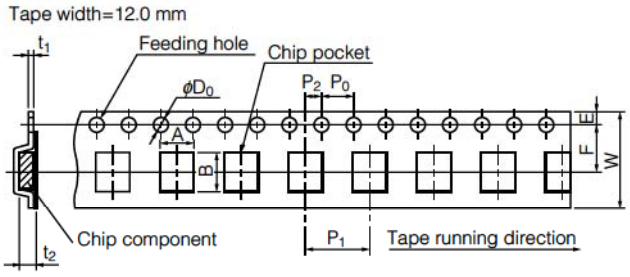

Unit: mm

Part No.	Height	A	B	W	F	E	P_1	P_2	P_0	D_0 Dia	t_1	t_2
EVPAA	1.7	4.5±0.2	3.8±0.2	12.0±0.3	5.5±0.1	1.75±0.10	8.0±0.1	2.0±0.1	4.0±0.1	$1.5^{+0.1}_{-0}$	0.3±0.1	1.85±0.20

● Standard Reel Dimensions in mm (not to scale)

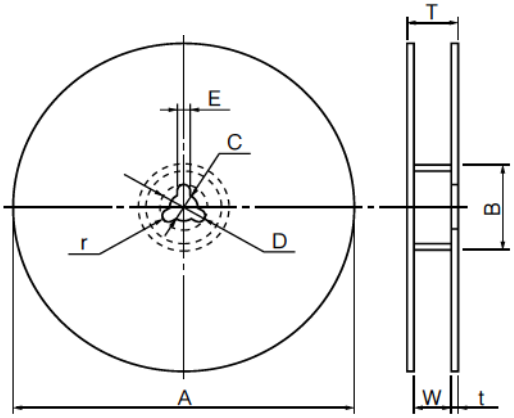

Item	A	B	C	D	E
Rate (mm)	φ380.0±2.0	φ80.0±1.0	φ13.0±0.5	φ21.0±1.0	2.0±0.5

Item	W	T	t	r
Rate (mm)	13.5±1.0	17.5±1.0	—	—

■ Recommended Shape of Test Pole

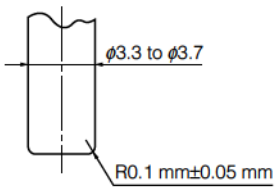

■ Recommended Operating Conditions

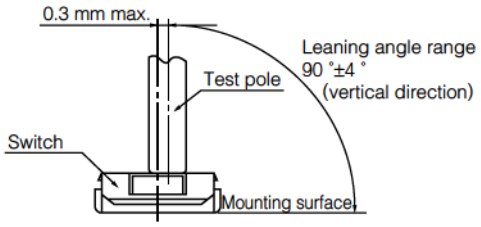

Design and specifications are each subject to change without notice. Ask factory for the current technical specifications before purchase and/or use.
Should a safety concern arise regarding this product, please be sure to contact us immediately.

4.7 mm×3.5 mm SMD Light Touch Switches

Type: **EVQP2/EVQP9/EVQ3P2**

■ Features

- External dimensions : 4.7 mm×3.5 mm,
  Height : Middle Push Travel 2.5 mm
  Short Push Travel 2.1 mm, 2.5 mm
- High operating force and long operational life
- High mountability with J-bent (4 terminals)

■ Recommended Applications

- Operation switches for portable electronic equipment (Mobile phones, Digital still cameras, Camcorders, Portable audio players, etc.)
- Keyless entry systems (automotive)
- Car audio equipment

■ Explanation of Part Numbers

1	2	3	4	5	6	7	8	9
E	V	Q	P/3	2/9/P				
Product Code			Type			Height		Push Plate Color

■ Specifications

Travel Type		Middle Push Travel	Short Push Travel
Type		Snap action / Push-on type SPST	
Electrical	Rating	10 μA 2 Vdc to 20 mA 15 Vdc (Resistive load)	
	Contact Resistance	100 mΩ max.	
	Insulation Resistance	100 MΩ min.	
	Dielectric Withstanding Voltage	250 Vac (1 minute)	
	Bouncing	10 ms max. (ON, OFF)	
Mechanical	Operating Force	2.5 N, 3.5 N, 5.0 N	1.0 N, 1.6 N, 2.4 N, 3.5 N, 5.0 N
	Travel	0.70 mm±0.20 mm	$0.25\ \mathrm{mm}^{+0.05}_{-0.15}$ mm
Endurance	Operating Life	2.5 N: 1000000 cycles min. 3.5 N: 500000 cycles min. 5.0 N: 200000 cycles min.	1.0 N, 1.6 N: 1000000 cycles min. 2.4 N: 500000 cycles min. 3.5 N: 200000 cycles min. 5.0 N: 200000 cycles min.
Operating Temperature		−40 °C to +85 °C	
Storage Temperature		−40 °C to +85 °C (Bulk) −20 °C to +60 °C (Taping)	
Minimum Quantity/Packing Unit		4000 pcs. Embossed Taping (Reel Pack)	
Quantity/Carton		20000 pcs.	

Design and specifications are each subject to change without notice. Ask factory for the current technical specifications before purchase and/or use.
Should a safety concern arise regarding this product, please be sure to contact us immediately.

■ Dimensions in mm (not to scale)

No. 1

EVQP2
EVQ3P2

Middle push travel
With J-bent terminals
(With Ground terminal)

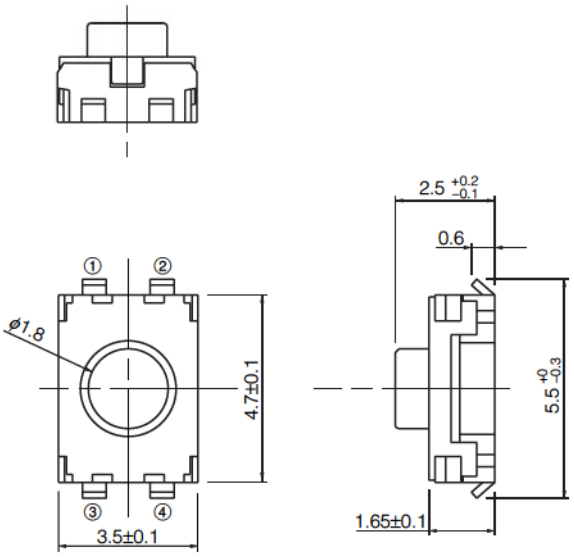

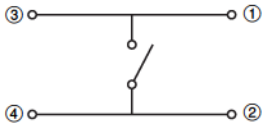

Circuit diagram

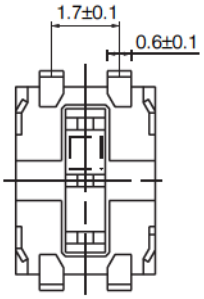

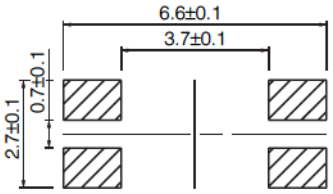

PWB land pattern for reference

Part Numbers	Ground Terminal	Operating Force	Height	Push Plate Color	Operating Life
EVQP2B02B	With	2.5 N	2.5 mm	Blue	1000000 cycles
EVQP2D02Q	With	3.5 N	2.5 mm	Grey	500000 cycles
EVQP2F02K	With	5.0 N	2.5 mm	Black	200000 cycles
EVQP2H02B	Without	2.5 N	2.5 mm	Blue	1000000 cycles
EVQP2K02Q	Without	3.5 N	2.5 mm	Grey	500000 cycles
EVQ3P202K	Without	5.0 N	2.5 mm	Black	200000 cycles

Design and specifications are each subject to change without notice. Ask factory for the current technical specifications before purchase and/or use.
Should a safety concern arise regarding this product, please be sure to contact us immediately.

■ Dimensions in mm (not to scale)

No. 2

EVQP2

Short push travel
With J-bent terminals
(With Ground terminal)

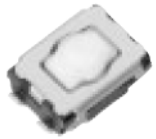

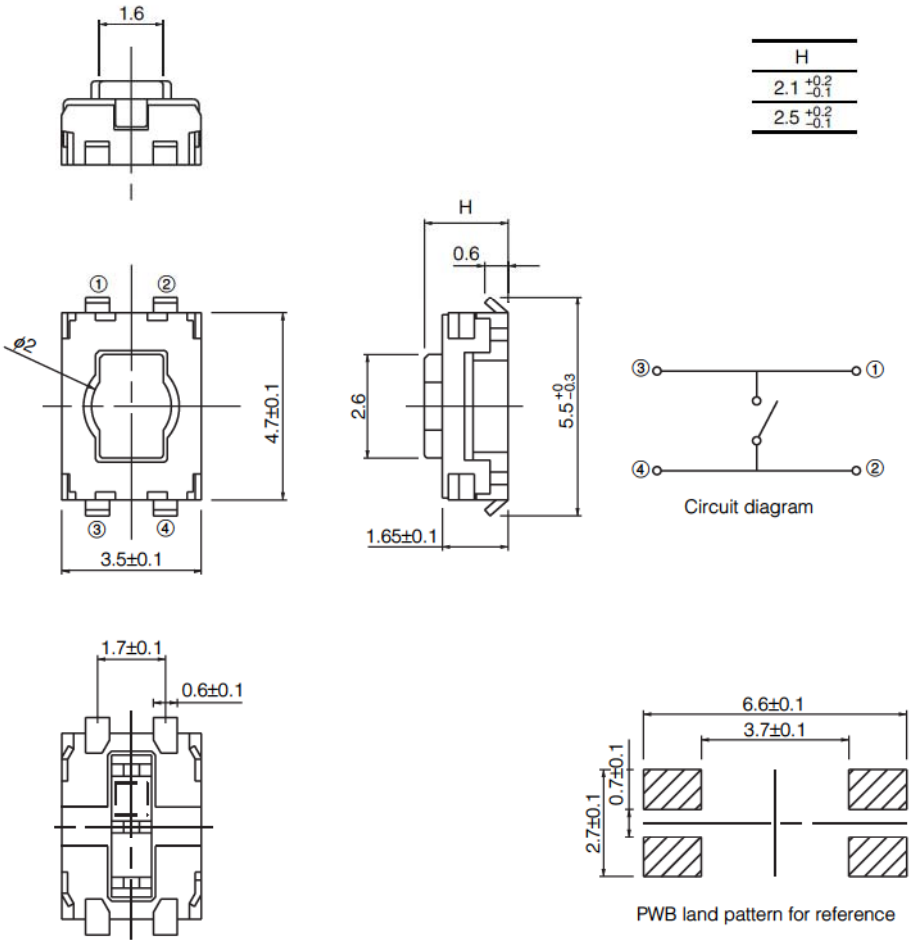

Part Numbers	Ground Terminal	Operating Force	H=Height	Push Plate Color	Operating Life
EVQP2P02M	With	1.0 N	2.1 mm	Natural	1000000 cycles
EVQP2P02W	With	1.0 N	2.5 mm	Natural	1000000 cycles
EVQP2R02M	With	1.6 N	2.1 mm	Natural	1000000 cycles
EVQP2R02W	With	1.6 N	2.5 mm	Natural	1000000 cycles
EVQP2T02M	With	2.4 N	2.1 mm	Natural	500000 cycles
EVQP2T02W	With	2.4 N	2.5 mm	Natural	500000 cycles
EVQP2V02M	With	3.5 N	2.1 mm	Natural	200000 cycles
EVQP2V02W	With	3.5 N	2.5 mm	Natural	200000 cycles
EVQP2002M	Without	1.0 N	2.1 mm	Natural	1000000 cycles
EVQP2002W	Without	1.0 N	2.5 mm	Natural	1000000 cycles
EVQP2202M	Without	1.6 N	2.1 mm	Natural	1000000 cycles
EVQP2202W	Without	1.6 N	2.5 mm	Natural	1000000 cycles
EVQP2402M	Without	2.4 N	2.1 mm	Natural	500000 cycles
EVQP2402W	Without	2.4 N	2.5 mm	Natural	500000 cycles
EVQP2602M	Without	3.5 N	2.1 mm	Natural	200000 cycles
EVQP2602W	Without	3.5 N	2.5 mm	Natural	200000 cycles
EVQP9H02M	With	5.0 N	2.1 mm	Natural	200000 cycles
EVQP9H02W	With	5.0 N	2.5 mm	Natural	200000 cycles
EVQP9P02M	Without	5.0 N	2.1 mm	Natural	200000 cycles
EVQP9P02W	Without	5.0 N	2.5 mm	Natural	200000 cycles

Design and specifications are each subject to change without notice. Ask factory for the current technical specifications before purchase and/or use.
Should a safety concern arise regarding this product, please be sure to contact us immediately.

■ Recommended Reflow Soldering Conditions

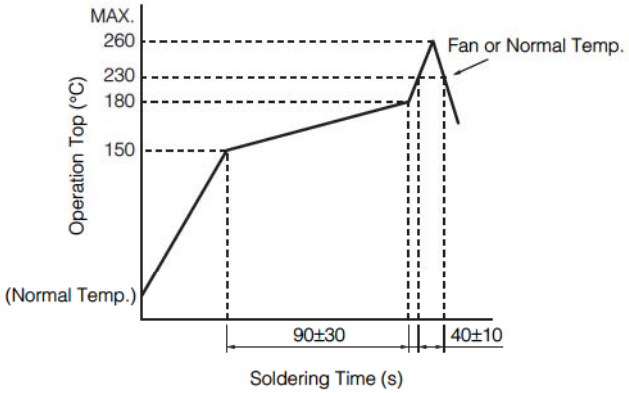

● Embossed Carrier Taping

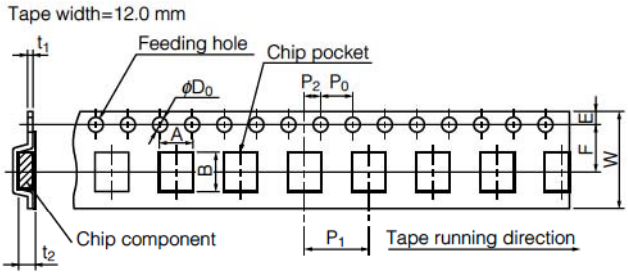

Unit: mm

Part No.	Height	A	B	W	F	E	P_1	P_2	P_0	D_0 Dia.	t_1	t_2
EVQP2 EVQP9 EVQ3P2	2.1 2.5	6.0±0.2	4.7±0.2	12.0±0.3	5.5±0.1	1.75±0.10	8.0±0.1	2.0±0.1	4.0±0.1	$1.5^{+0.1}_{-0}$	0.3±0.1	2.7±0.2

● Standard Reel Dimensions in mm (not to scale)

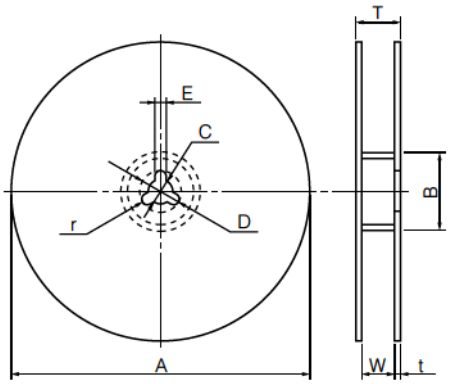

Item	A	B	C	D	E
Rate (mm)	φ370.0±2.0	φ50.0 min.	φ13.0±0.5	φ21.0±1.0	2.0±0.5

Item	W	T	t	r
Rate (mm)	14.0±1.5	—	1.0 to 3.0	1.0±0.5

■ Recommended Shape of Test Pole

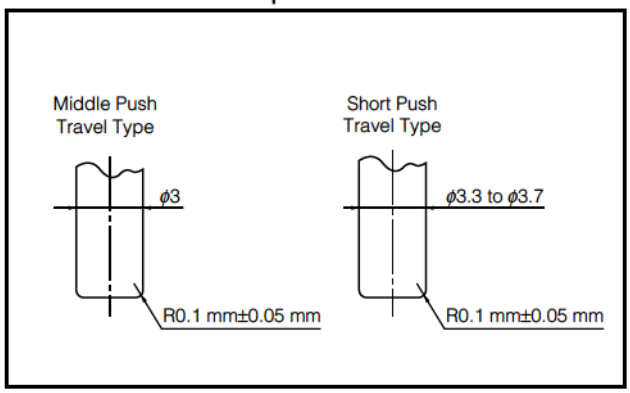

■ Recommended Operating Conditions

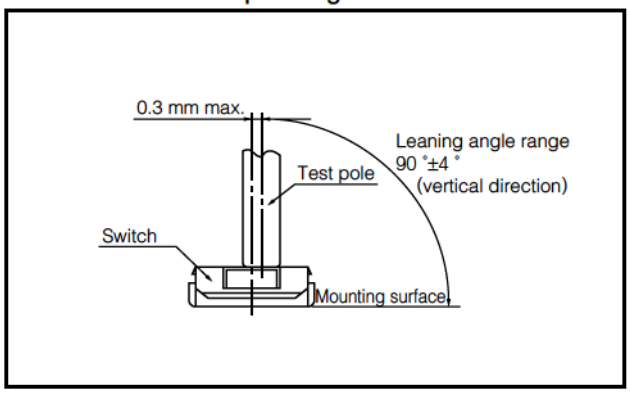

Design and specifications are each subject to change without notice. Ask factory for the current technical specifications before purchase and/or use.
Should a safety concern arise regarding this product, please be sure to contact us immediately.

6.0 mm×3.5 mm SMD Light Touch Switches

Type: **EVQPE1/EVQPN/EVQ5P**

■ Features

- External dimensions : 6.0 mm×3.5 mm, Height 4.3 mm, 5.0 mm

■ Recommended Applications

- Operating switches for other electronic equipment

■ Explanation of Part Numbers

1	2	3	4	5	6	7	8	9
E	V	Q	P/5					
Product Code			Type		Operating Force	Height		Push Plate Color

■ Product Chart

Operating Force \ Type	SMD	Height
1.0 N±0.5 N	EVQPE1	H=4.3 mm H=5.0 mm
1.6 N±0.5 N	EVQPNF	
2.4 N±0.6 N	EVQ5PN	

■ Specifications

Type		Snap action/Push-on type SPST	
Electrical	Circuit Diagram	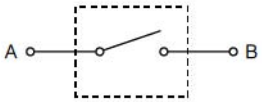	
	Rating	10 μA 2 Vdc to 50 mA 12 Vdc (Resistive load)	
	Contact Resistance	100 mΩ max.	
	Insulation Resistance	100 MΩ min. (at 100 Vdc)	
	Dielectric Withstanding Voltage	250 Vac for 1 minute	
	Bouncing	10 ms max. (ON, OFF)	
Mechanical	Operating Force	1.0 N±0.5N (Low force type) 1.6 N±0.5 N (Standard)	2.4 N±0.6 N
	Travel	0.25 mm $^{+0.20}_{-0.10}$ mm	
Endurance	Operating Life	50000 cycles min.	30000 cycles min.
Operating Temperature		−30 °C to +85 °C	
Storage Temperature		−40 °C to +85 °C (Bulk) −20 °C to +60 °C (Taping)	
Minimum Quantity/Packing Unit		2000 pcs. Embossed Taping(Reel Pack) (H = 5.0 mm)	2500 pcs. Embossed Taping(Reel Pack) (H = 4.3 mm)
Quantity/Carton		10000 pcs. (H = 5.0 mm)	12500 pcs. (H = 4.3 mm)

Design and specifications are each subject to change without notice. Ask factory for the current technical specifications before purchase and/or use.
Should a safety concern arise regarding this product, please be sure to contact us immediately.

■ Dimensions in mm (not to scale)

EVQPE1
EVQPNF
EVQ5PN

(Embossed Taping)

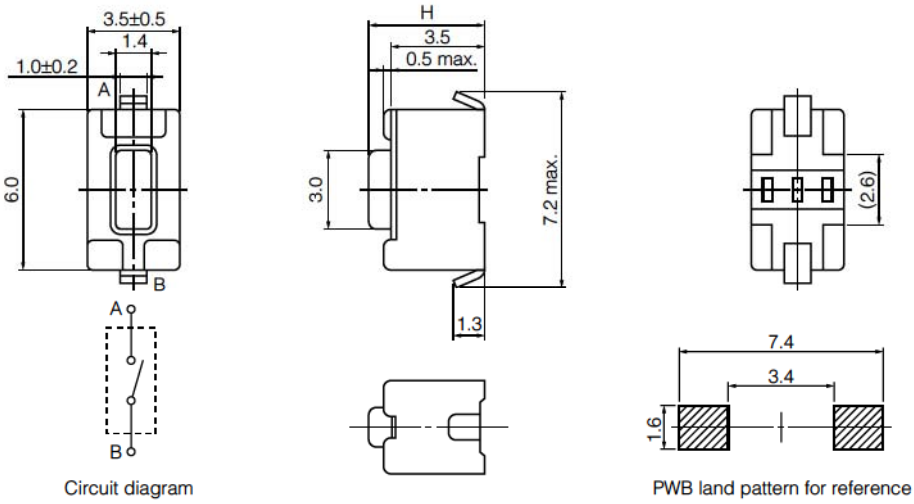

Part Numbers	Operating Force	H=Height	Push Plate Color	Operating Life
EVQPE104K	1.0 N	4.3 mm	Black	50000 cycles
EVQPE105K	1.0 N	5.0 mm	Black	50000 cycles
EVQPNF04M	1.6 N	4.3 mm	Natural	50000 cycles
EVQPNF05M	1.6 N	5.0 mm	Natural	50000 cycles
EVQ5PN04K	2.4 N	4.3 mm	Black	30000 cycles
EVQ5PN05K	2.4 N	5.0 mm	Black	30000 cycles

■ Recommended Reflow Soldering Conditions

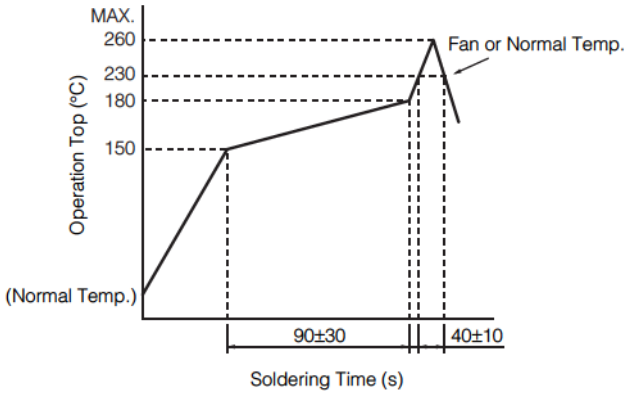

● Embossed Carrier Taping

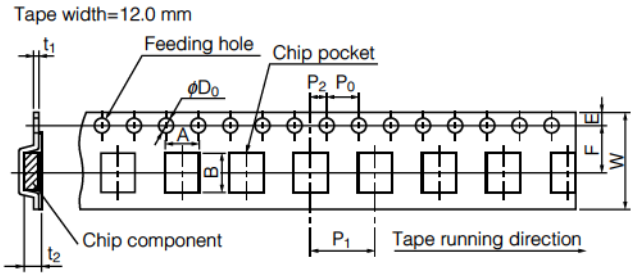

Unit: mm

Part No.	Height	A	B	W	F	E	P_1	P_2	P_0	D_0 Dia.	t_1	t_2
EVQPE1 EVQPN EVQ5P	4.3/5.0	5.8±0.2	7.9±0.2	12.0±0.3	5.5±0.1	1.75±0.10	8.0±0.1	2.0±0.1	4.0±0.1	$1.5^{+0.1}_{-0}$	0.4±0.05	4.5/5.2±0.2

● Standard Reel Dimensions in mm (not to scale)

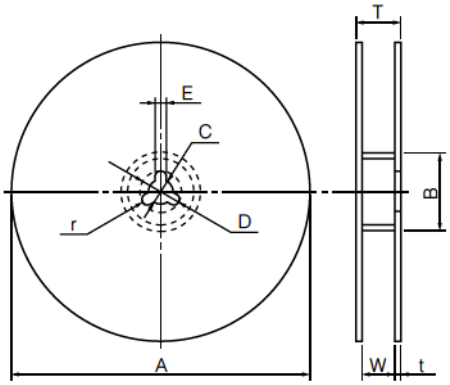

Item	A	B	C	D	E
Rate (mm)	φ370.0±2.0	φ50.0 min.	φ13.0±0.5	φ21.0±1.0	2.0±0.5

Item	W	T	t	r
Rate (mm)	14.0±1.5	—	1.0 to 3.0	1.0±0.5

Design and specifications are each subject to change without notice. Ask factory for the current technical specifications before purchase and/or use.
Should a safety concern arise regarding this product, please be sure to contact us immediately.

3.5 mm×2.9 mm Side-operational SMD Light Touch Switches

Type: **EVQP7/EVQP3/EVQ9P7**

■ Features

- External dimensions : 3.5 mm×2.9 mm, Height 1.35 mm
- A wide range of terminal type : L-shape, J-bent, Straight
- High mount ability
- Push plate strength enhanced type

■ Recommended Applications

- Operation switches for portable electronic equipment (Mobile phones, Digital still cameras, Camcorders, Portable audio players, etc.)

■ Explanation of Part Numbers

1	2	3	4	5	6	7	8	9
E	V	Q	□	□	□	0	1	K

4th, 5th, 6th	Type
P7□	· Terminal Type · With Ground Terminal, Without Ground Terminal · With Boss, Without Boss · Operating Force
P3□	
9P7	

7th & 8th	Mounting Height
01	1.35 mm

9th	Push Plate Color
K	Black

■ Specifications

Type		Snap action / Push-on type SPST
Electrical	Rating	10 μA 2 Vdc to 50 mA 12 Vdc (Resistive load)
	Contact Resistance	500 mΩ max.
	Insulation Resistance	100 MΩ min. (at 100 Vdc)
	Dielectric Withstanding Voltage	250 Vac (1 minute)
	Bouncing	10 ms max. (ON, OFF)
Mechanical	Operating Force	1.6 N, 2.2 N
	Push Travel	0.2 mm
	Push Strength	30 N (1 minute)
Endurance	Operating Life	100000 cycles min.
Operating Temperature		–20 °C to +70 °C
Storage Temperature		–40 °C to +85 °C (Bulk) –20 °C to +60 °C (Taping)
Minimum Quantity/Packing Unit		5000 pcs. Embossed Taping (Reel Pack)
Quantity/Carton		25000 pcs.

Design and specifications are each subject to change without notice. Ask factory for the current technical specifications before purchase and/or use.
Should a safety concern arise regarding this product, please be sure to contact us immediately.

00 Oct. 2012

■ Dimensions in mm (not to scale)

No. 1

EVQP7A
EVQP7J

(Embossed Taping)

With straight terminals
Without boss

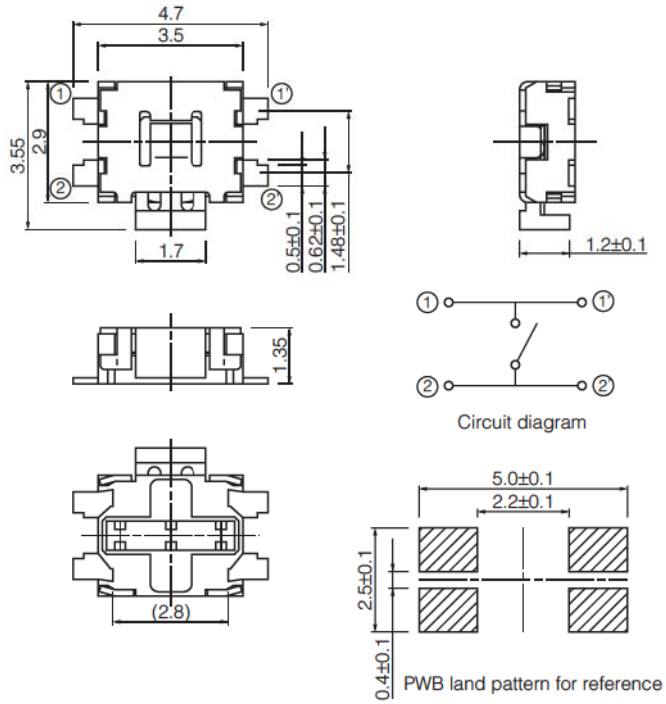

Part Numbers	Operating Force	Height	Push Plate Color	Operating Life
EVQP7A01K	2.2 N	1.35 mm	Black	100000 cycles
EVQP7J01K	1.6 N	1.35 mm	Black	100000 cycles

No. 2

EVQP7C
EVQP7L

(Embossed Taping)

With straight terminals
With boss

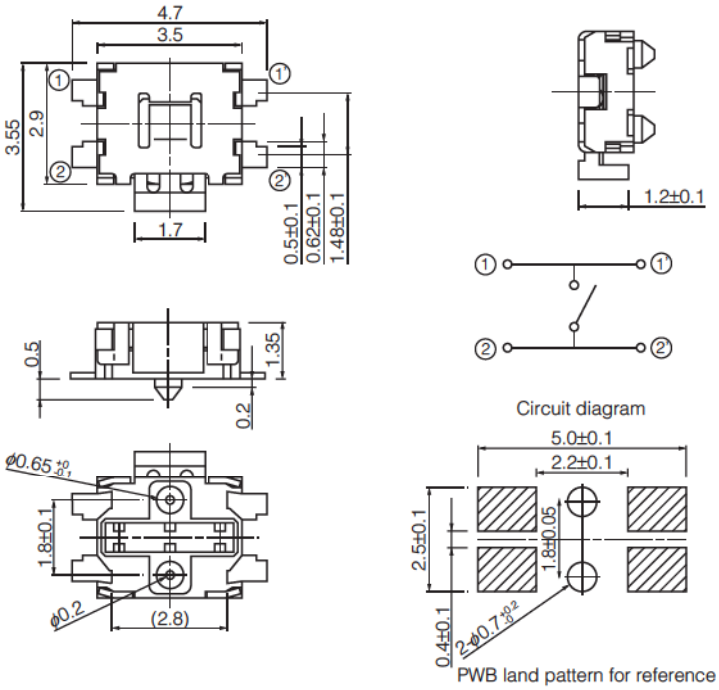

Part Numbers	Operating Force	Height	Push Plate Color	Operating Life
EVQP7C01K	2.2 N	1.35 mm	Black	100000 cycles
EVQP7L01K	1.6 N	1.35 mm	Black	100000 cycles

Design and specifications are each subject to change without notice. Ask factory for the current technical specifications before purchase and/or use.
Should a safety concern arise regarding this product, please be sure to contact us immediately.

■ Dimensions in mm (not to scale)

No. 3

EVQP7B
EVQP7K

(Embossed Taping)

With J-bent terminals
Without boss

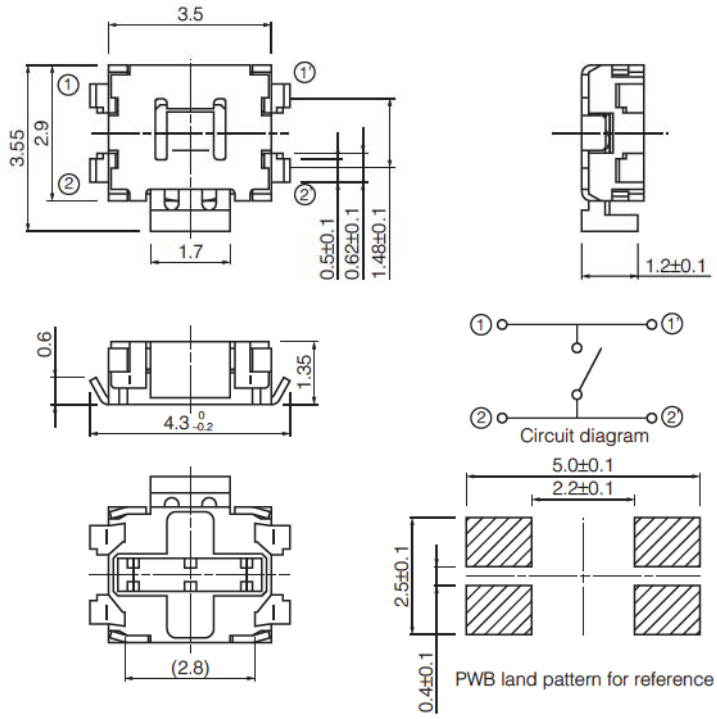

Part Numbers	Operating Force	Height	Push Plate Color	Operating Life
EVQP7B01K	2.2 N	1.35 mm	Black	100000 cycles
EVQP7K01K	1.6 N	1.35 mm	Black	100000 cycles

No. 4

EVQP7D
EVQP7M

(Embossed Taping)

With J-bent terminals
With boss

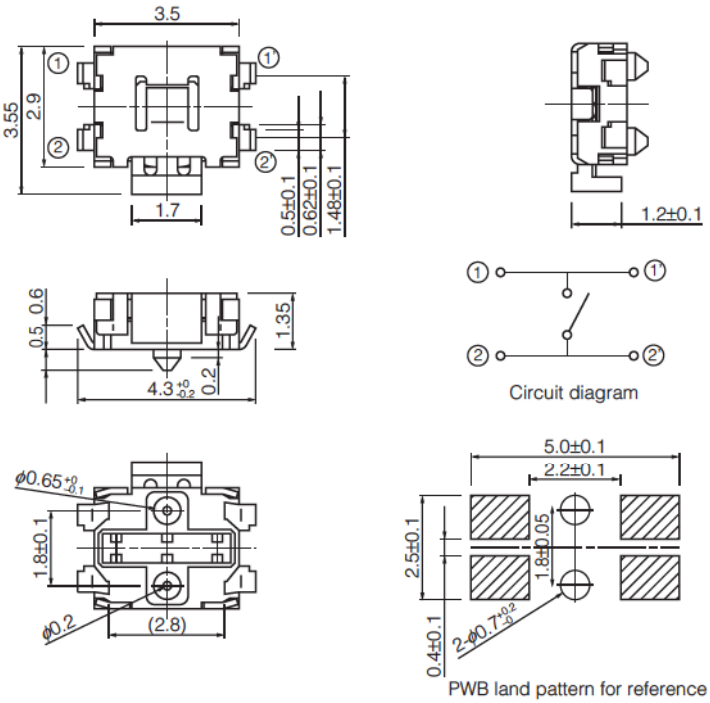

Part Numbers	Operating Force	Height	Push Plate Color	Operating Life
EVQP7D01K	2.2 N	1.35 mm	Black	100000 cycles
EVQP7M01K	1.6 N	1.35 mm	Black	100000 cycles

Design and specifications are each subject to change without notice. Ask factory for the current technical specifications before purchase and/or use.
Should a safety concern arise regarding this product, please be sure to contact us immediately.

■ Dimensions in mm (not to scale)

No. 5

EVQP3
EVQ9P

(Embossed Taping)

With L-shape terminals
Without boss

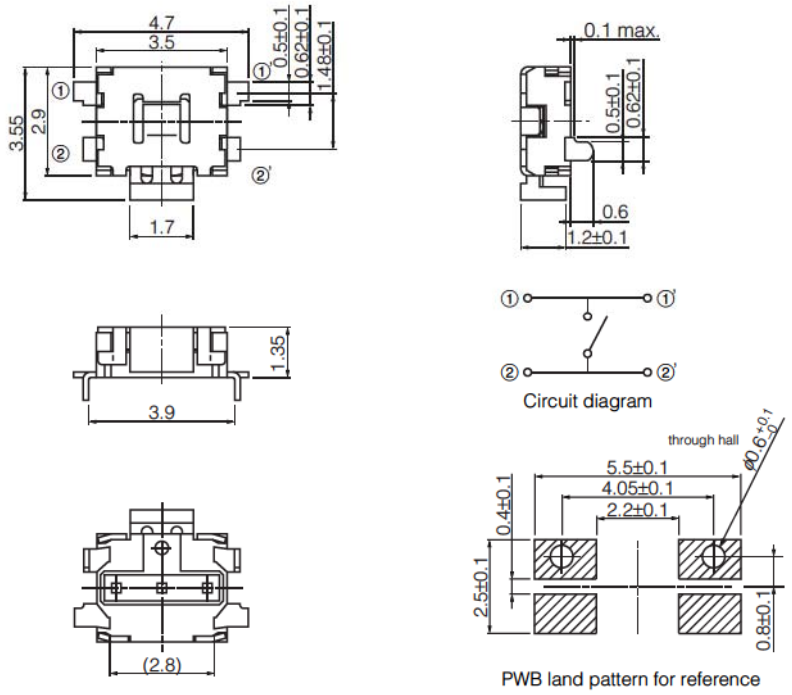

Part Numbers	Operating Force	Height	Push Plate Color	Operating Life
EVQP3401K	2.2 N	1.35 mm	Black	100000 cycles
EVQ9P701K	1.6 N	1.35 mm	Black	100000 cycles

■ Recommended Reflow Soldering Conditions

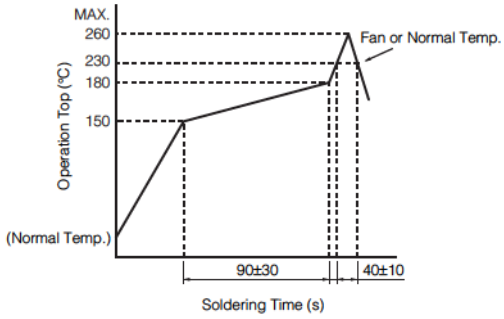

● Embossed Carrier Taping

Tape width=12.0 mm

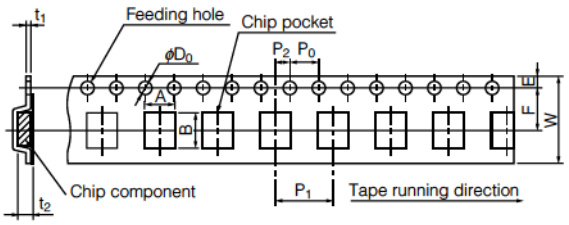

● Straight terminals, L-shape terminals type

Unit: mm

Part No.	Height	A	B	W	F	E	P_1	P_2	P_0	D_0 Dia.	t_1	t_2
EVQP7, EVQP3 EVQ9P7	1.35	5.2±0.2	4.5±0.2	12.0±0.3	5.5±0.1	1.75±0.10	8.0±0.1	2.0±0.1	4.0±0.1	$1.5^{+0.1}_{-0}$	0.3±0.1	1.5±0.2

● J-bent type

Unit: mm

Part No.	Height	A	B	W	F	E	P_1	P_2	P_0	D_0 Dia.	t_1	t_2
EVQP7, EVQP3	1.35	4.5±0.2	4.5±0.2	12.0±0.3	5.5±0.1	1.75±0.10	8.0±0.1	2.0±0.1	4.0±0.1	$1.5^{+0.1}_{-0}$	0.3±0.1	1.5±0.2

● Standard Reel Dimensions in mm (not to scale)

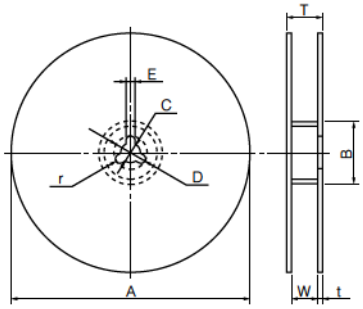

Item	A	B	C	D	E
Rate (mm)	φ380.0±2.0	φ80.0±1.0	φ13.0±0.5	φ21.0±1.0	2.0±0.5

Item	W	T	t	r
Rate (mm)	13.5±1.0	17.5±1.0	1.0 to 3.0	1.0±0.5

Design and specifications are each subject to change without notice. Ask factory for the current technical specifications before purchase and/or use.
Should a safety concern arise regarding this product, please be sure to contact us immediately.

3.5 mm×2.9 mm Side-operational Half Dive /SMD Light Touch Switches

Type: **EVPAN**

■ Features

- External dimensions : 3.5 mm×2.9 mm, Height 1.2 mm
- Printed circuit board on height : 0.7 mm
- High mount ability

■ Recommended Applications

- Operation switches for portable electronic equipment (Mobile phones, Digital still cameras, Camcorders, Portable audio players, etc.)

■ Explanation of Part Numbers

1	2	3	4	5	6	7	8	9
E	V	P	A	N				

Product Code — Characteristic — Height

7 th	Terminal Type
A	Straight
E	L shape

■ Specifications

Type		Snap action / Push-on type SPST
Electrical	Rating	10 μA 2 Vdc to 50 mA 12 Vdc (Resistive load)
	Contact Resistance	500 mΩ max.
	Insulation Resistance	100 MΩ min. (at 100 Vdc)
	Dielectric Withstanding Voltage	250 Vac (1 minute)
	Bouncing	10 ms max. (ON, OFF)
Mechanical	Operating Force	1.6 N, 2.2 N
	Push Travel	0.2 mm
	Push Strength	70 N (1 minute)
Endurance	Operating Life	100000 cycles min.
Operating Temperature		–20 °C to +70 °C
Storage Temperature		–40 °C to +85 °C (Bulk) –20 °C to +60 °C (Taping)
Minimum Quantity/Packing Unit		7000 pcs. Embossed Taping (Reel Pack)
Quantity/Carton		35000 pcs.

Design and specifications are each subject to change without notice. Ask factory for the current technical specifications before purchase and/or use.
Should a safety concern arise regarding this product, please be sure to contact us immediately.

00 Oct. 2012

■ Dimensions in mm (not to scale)

EVPANA
EVPAND

(Embossed Taping)

Straight terminals

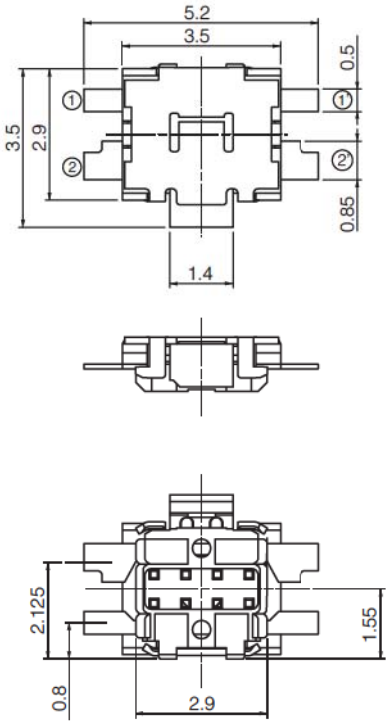

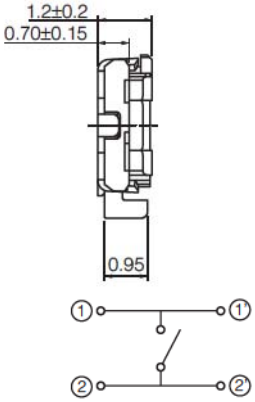

Circuit diagram

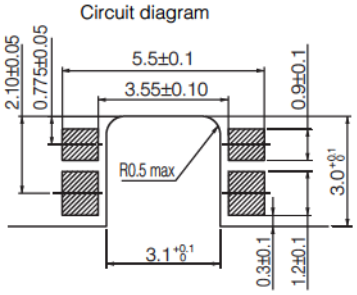

PWB land pattern for reference

Part Numbers	Operating Force	Height	Push Plate Color	Operating Life
EVPANAA1A	1.6 N	0.7 mm	Black	100000 cycles
EVPANDA1A	2.2 N	0.7 mm	Black	100000 cycles
EVPANBA1A	1.6 N	0.7 mm	Black	500000 cycles

EVPAND
EVPANB

(Embossed Taping)

Straight terminals

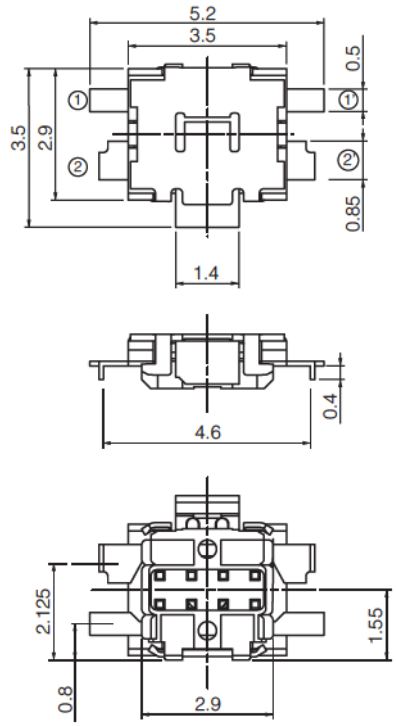

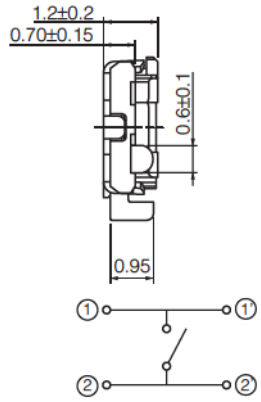

Circuit diagram

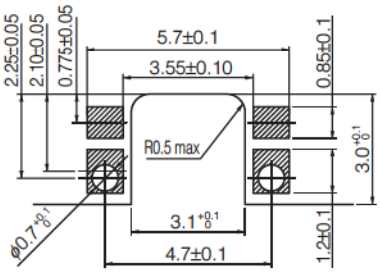

PWB land pattern for reference

Part Numbers	Operating Force	Height	Push Plate Color	Operating Life
EVPANDE1A	2.2 N	0.7 mm	Black	100000 cycles
EVPANBE1A	1.6 N	0.7 mm	Black	500000 cycles

Design and specifications are each subject to change without notice. Ask factory for the current technical specifications before purchase and/or use.
Should a safety concern arise regarding this product, please be sure to contact us immediately.

■ Recommended Solder Mask

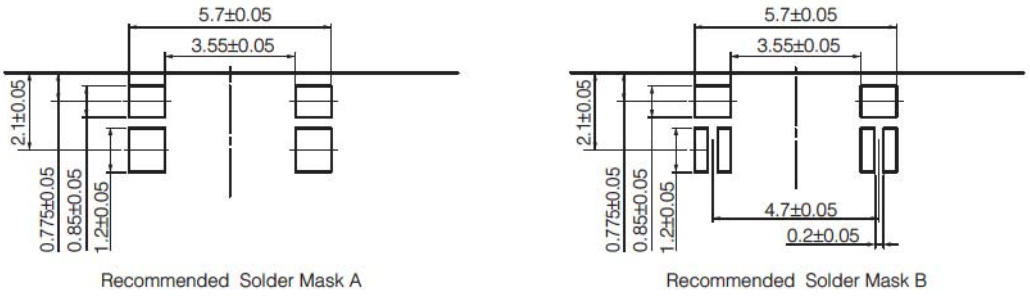

Solder Mask B

■ Recommended Reflow Soldering Conditions

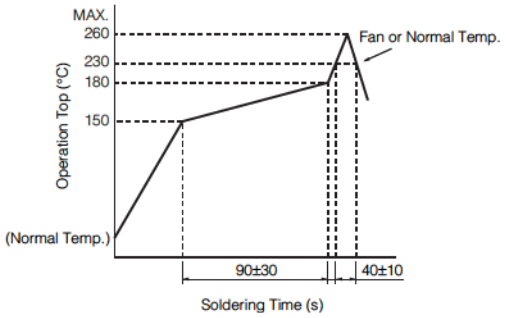

● Embossed Carrier Taping

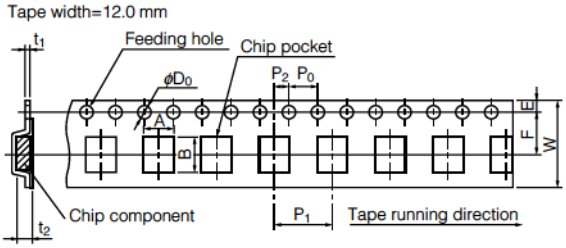

● Straight terminals

Unit: mm

Part No.	Height	A	B	W	F	E	P_1	P_2	P_0	D_0 Dia.	t_1	t_2
EVPAN	1.2	5.6±0.2	4.5±0.2	12.0±0.3	5.5±0.1	1.75±0.10	8.0±0.1	2.0±0.1	4.0±0.1	$1.5^{+0.1}_{-0}$	0.3±0.1	1.35±0.20

● Standard Reel Dimensions in mm (not to scale)

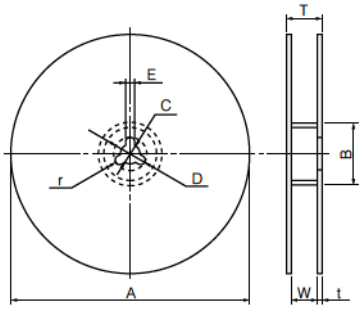

Item	A	B	C	D	E
Rate (mm)	φ380.0±2.0	φ80.0±1.0	φ13.0±0.5	φ21.0±1.0	2.0±0.5

Item	W	T	t	r
Rate (mm)	13.5±1.0	17.5±1.0	1.0~3.0	1.0±0.5

Design and specifications are each subject to change without notice. Ask factory for the current technical specifications before purchase and/or use.
Should a safety concern arise regarding this product, please be sure to contact us immediately.

Small-sized Side-operational SMD Light Touch Switches

Type: **EVQPU**

■ Features

- External dimensions : 4.7 mm×3.5 mm, Height 1.65 mm
- A wide range of terminal type : J-bent, Straight

■ Recommended Applications

- Operation switches for portable electronic equipment (Mobile phones, Digital still cameras, Camcorders, Portable audio players, etc.)

■ Explanation of Part Numbers

1	2	3	4	5	6	7	8	9
E	V	Q	P	U		0	2	K
			Type					

6th		Terminal Type	Operating Force
Without Boss	With Boss		
A	C	Straight	2.2 N
B	D	J-bent	
J	L	Straight	1.6 N
K	M	J-bent	

7th & 8th	Mounting Height
02	1.65 mm

9th	Push Plate Color
K	Black

■ Specifications

Type		Snap action / Push-on type SPST	
Electrical	Rating	10 μA 2 Vdc to 50 mA 12 Vdc (Resistive load)	
	Contact Resistance	500 mΩ max.	
	Insulation Resistance	100 MΩ min. (at 100 Vdc)	
	Dielectric Withstanding Voltage	250 Vac for 1 minute	
	Bouncing	10 ms max. (ON, OFF)	
Mechanical	Operating Force	1.6 $N^{+0.7}_{-0.4}$ N	2.2 $N^{+0.8}_{-0.7}$ N
	Travel	0.3 mm $^{+0.1}_{-0.2}$ mm	
	Push Strength	30 N (1 minute)	
Endurance	Operating Life	100000 cycles min.	
Operating Temperature		−20 °C to +70 °C	
Storage Temperature		−40 °C to +85 °C (Bulk) −20 °C to +60 °C (Taping)	
Minimum Quantity/Packing Unit		4000 pcs. Embossed Taping (Reel Pack)	
Quantity/Carton		20000 pcs.	

Design and specifications are each subject to change without notice. Ask factory for the current technical specifications before purchase and/or use.
Should a safety concern arise regarding this product, please be sure to contact us immediately.

00 Oct. 2012

■ Dimensions in mm (not to scale)

No. 1

EVQPUJ
EVQPUA

(Embossed Taping)

With straight terminals
Without boss

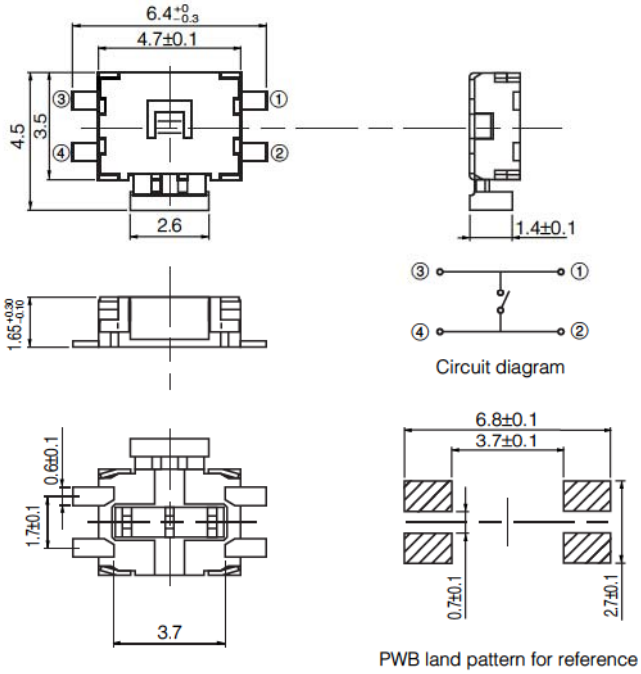

Part Numbers	Operating Force	Height	Push Plate Color	Operating Life
EVQPUJ02K	1.6 N	1.65 mm	Black	100000 cycles
EVQPUA02K	2.2 N	1.65 mm	Black	100000 cycles

No. 2

EVQPUL
EVQPUC

(Embossed Taping)

With straight terminals
With boss

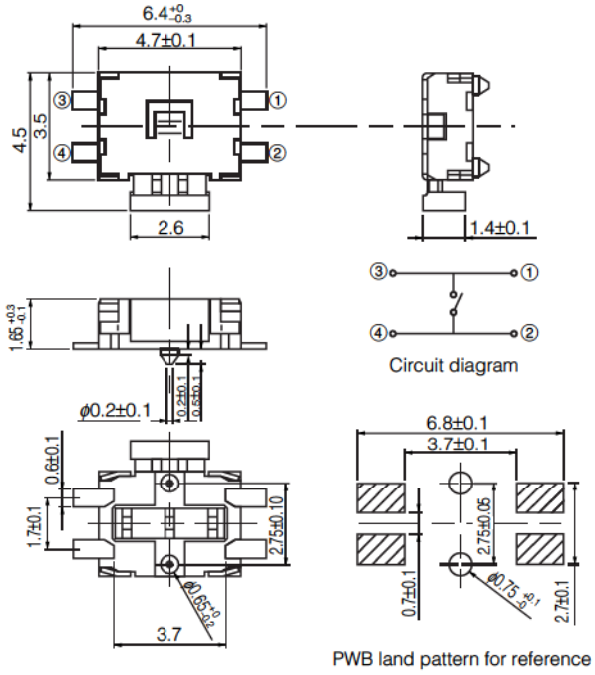

Part Numbers	Operating Force	Height	Push Plate Color	Operating Life
EVQPUL02K	1.6 N	1.65 mm	Black	100000 cycles
EVQPUC02K	2.2 N	1.65 mm	Black	100000 cycles

Design and specifications are each subject to change without notice. Ask factory for the current technical specifications before purchase and/or use.
Should a safety concern arise regarding this product, please be sure to contact us immediately.

■ Dimensions in mm (not to scale)

No. 3

EVQPUK
EVQPUB

(Embossed Taping)

With J-bent terminals
Without boss

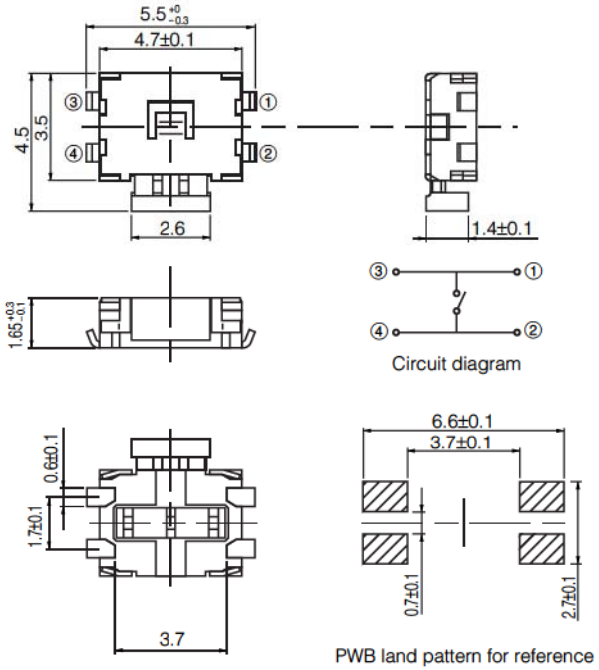

Part Numbers	Operating Force	Height	Push Plate Color	Operating Life
EVQPUK02K	1.6 N	1.65 mm	Black	100000 cycles
EVQPUB02K	2.2 N	1.65 mm	Black	100000 cycles

No. 4

EVQPUM
EVQPUD

(Embossed Taping)

With J-bent terminals
With boss

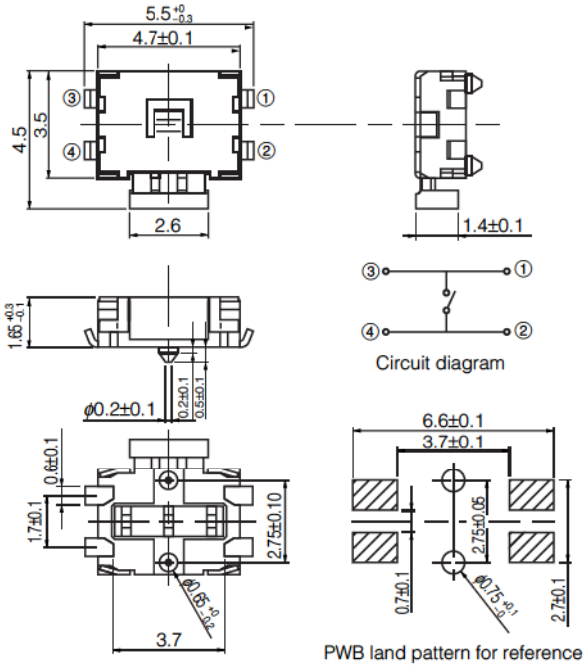

Part Numbers	Operating Force	Height	Push Plate Color	Operating Life
EVQPUM02K	1.6 N	1.65 mm	Black	100000 cycles
EVQPUD02K	2.2 N	1.65 mm	Black	100000 cycles

Design and specifications are each subject to change without notice. Ask factory for the current technical specifications before purchase and/or use.
Should a safety concern arise regarding this product, please be sure to contact us immediately.

■ Recommended Reflow Soldering Conditions

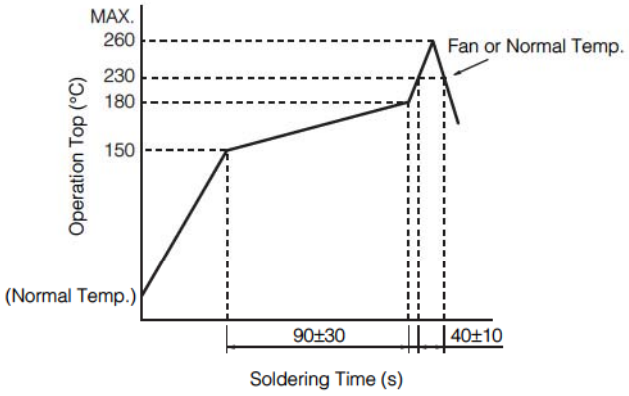

● Embossed Carrier Taping

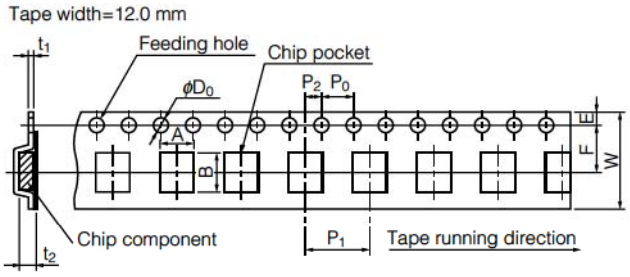

Unit: mm

Part No.	Height	A	B	W	F	E	P_1	P_2	P_0	D_0 Dia.	t_1	t_2
EVQPU	1.65	7.0±0.2	5.75±0.20	12.0±0.3	5.78±0.20	1.75±0.10	8.0±0.1	2.0±0.1	4.0±0.1	$1.5^{+0.1}_{-0}$	0.35±0.05	2.4±0.2

● Standard Reel Dimensions in mm (not to scale)

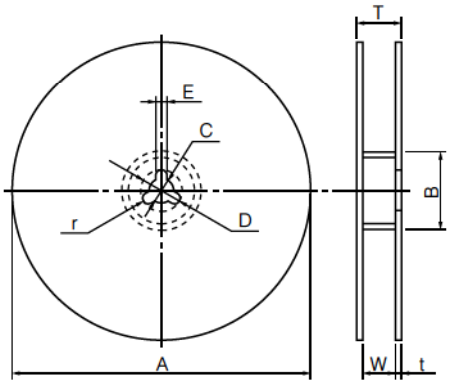

Item	A	B	C	D	E
Rate (mm)	φ370.0±2.0	φ50.0 min.	φ13.0±0.5	φ21.0±1.0	2.0±0.5

Item	W	T	t	r
Rate (mm)	14.0±1.5	—	1.0 to 3.0	1.0±0.5

Design and specifications are each subject to change without notice. Ask factory for the current technical specifications before purchase and/or use.
Should a safety concern arise regarding this product, please be sure to contact us immediately.

2.8 mm×2.3 mm Side-operational Edge Mount Light Touch Switches

Type: **EVPAV**

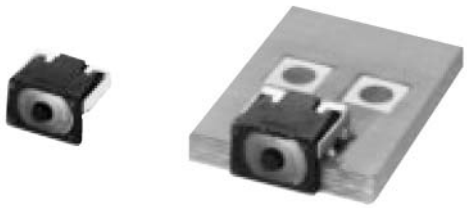

■ Features

- External dimensions : 2.8 mm×2.3 mm (Excluding the push plate), Height 1.95 mm (Printed circuit board being as low as 0.975 mm)
- Improved soldering strength in the operating direction

■ Recommended Applications

- Operation switches for portable electronic equipment (Mobile phones, Digital still cameras, Camcorders Portable audio players, etc.)

■ Explanation of Part Numbers

1	2	3	4	5	6	7	8	9
E	V	P	A	V				
Product Code			Type					

■ Specifications

Type		Snap action / Push-on type SPST
Electrical	Rating	10 μA 2 Vdc to 20 mA 15 Vdc (Resistive load)
	Contact Resistance	500 mΩ max.
	Insulation Resistance	50 MΩ min. (at 100 Vdc)
	Dielectric Withstanding Voltage	250 Vac (1 minute)
	Bouncing	10 ms max. (ON, OFF)
Mechanical	Operating Force	1.6 N
	Push Travel	0.13 mm
	Push Strength	50 N (15 seconds)
Endurance	Operating Life	300000 cycles min.
Operating Temperature		–40 °C to +85 °C
Storage Temperature		–40 °C to +85 °C (Bulk) –20 °C to +60 °C (Taping)
Minimum Quantity/Packing Unit		8000 pcs. Embossed Taping (Reel Pack)
Quantity/Carton		40000 pcs.

Design and specifications are each subject to change without notice. Ask factory for the current technical specifications before purchase and/or use.
Should a safety concern arise regarding this product, please be sure to contact us immediately.

NEW

■ Dimensions in mm (not to scale)

EVPAV

General dimension tolerance : ± 0.1
( )dimensions are reference dimensions.
This reference specifications are subject to change.

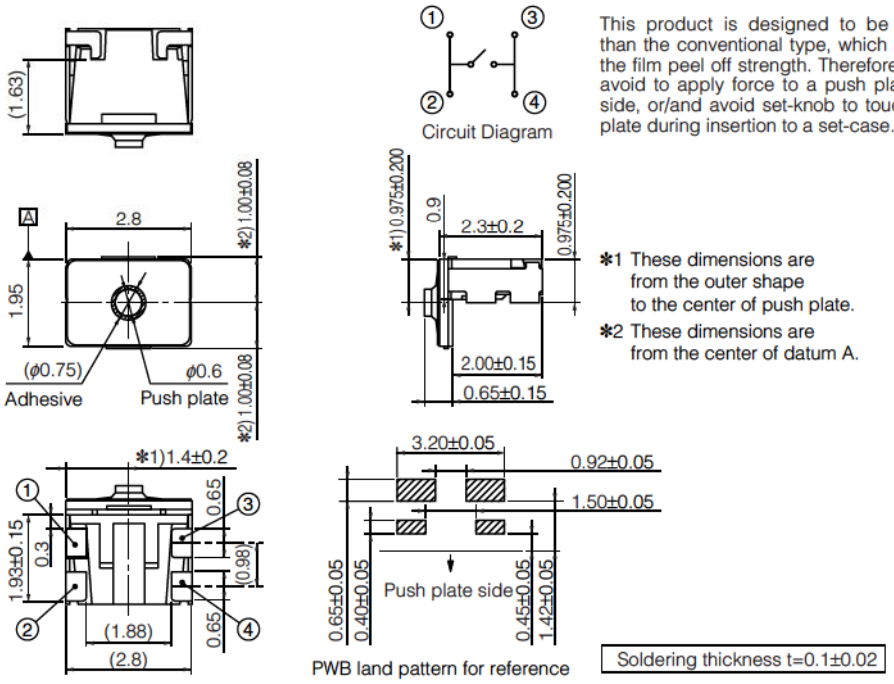

This product is designed to be smaller than the conventional type, which lowered the film peel off strength. Therefore please avoid to apply force to a push plate from side, or/and avoid set-knob to touch push plate during insertion to a set-case.

*1 These dimensions are from the outer shape to the center of push plate.
*2 These dimensions are from the center of datum A.

* Height from surface of PCB : 0.975 mm

■ Recommended Reflow Soldering Conditions

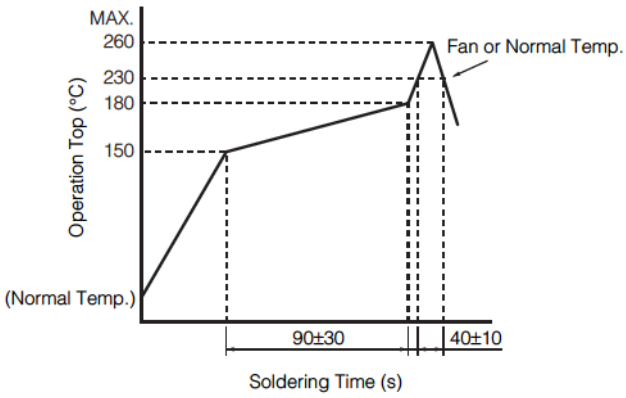

● Embossed Carrier Taping

Tape width=8.0 mm

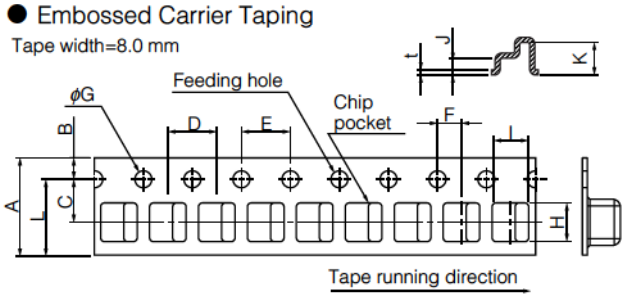

Taping condition : Lack of products in the middle of taping should be one MAX, but total quantity specified in the specifications should be secured.
Peeling off strength of top tape : It should be within 0.2N to 1. ON at 165 degree in peeling off angle.
Joint of carrier tape : One joint per one reel may exist.

Unit: mm

Part No.	Height	A	B	C	D	E	F	G	H	I	J	K	L	t
EVPAV	1.95	8.0±0.3	1.75±0.10	3.5±0.1	4.0±0.1	4.0±0.1	2.0±0.1	$1.5^{+0.1}_{0}$	3.1±0.2	2.8±0.2	1.35±0.20	2.7±0.2	(6.25)	0.3±0.1

● Standard Reel Dimensions in mm (not to scale)

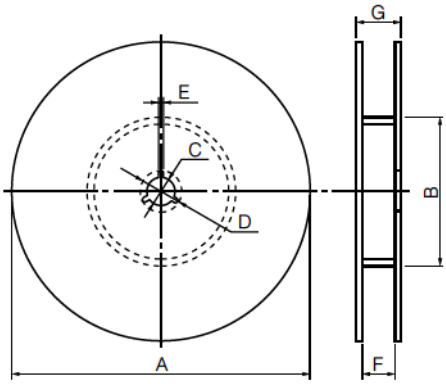

Item	A	B	C	D	E
Rate (mm)	φ380.0±2.0	φ80.0±1.0	φ13.0±0.5	φ21.0±1.0	2.0±0.5

Item	F	G
Rate (mm)	9.4±1.0	13.4±1.0

Design and specifications are each subject to change without notice. Ask factory for the current technical specifications before purchase and/or use.
Should a safety concern arise regarding this product, please be sure to contact us immediately.

4.5 mm×2.2 mm Side-operational Edge Mount Light Touch Switches

Type: **EVPAE**

■ Features

- External dimensions : 4.5 mm×2.25 mm (Excluding the push plate), Height 2.9 mm (Printed circuit board being as low as 0.95 mm)
- Improved soldering strength in the operating direction
- Long operational life
- Measure against electro static discharge(ESD)

■ Recommended Applications

- Operation switches for portable electronic equipment (Mobile phones, Digital still cameras, Camcorders Portable audio players, etc.)

■ Explanation of Part Numbers

1	2	3	4	5	6	7	8	9
E	V	P	A	E				
Product Code			Type				Height	

■ Specifications

Type		Snap action / Push-on type SPST
Electrical	Rating	10 μA 2 Vdc to 20 mA 15 Vdc (Resistive load)
	Contact Resistance	1000 mΩ max.
	Insulation Resistance	100 MΩ min. (at 100 Vdc)
	Dielectric Withstanding Voltage	250 Vac (1 minute)
	Bouncing	10 ms max. (ON, OFF)
Mechanical	Operating Force	1.6 N, 3.0 N
	Push Travel	0.15 mm
	Push Strength	50 N (1 minute)
Endurance	Operating Life	200000 cycles min.
Operating Temperature		–40 °C to +85 °C
Storage Temperature		–40 °C to +85 °C (Bulk) –20 °C to +60 °C (Taping)
Minimum Quantity/Packing Unit		3500 pcs. Embossed Taping (Reel Pack)
Quantity/Carton		17500 pcs.

Design and specifications are each subject to change without notice. Ask factory for the current technical specifications before purchase and/or use.
Should a safety concern arise regarding this product, please be sure to contact us immediately.

■ Dimensions in mm (not to scale)

EVPAE

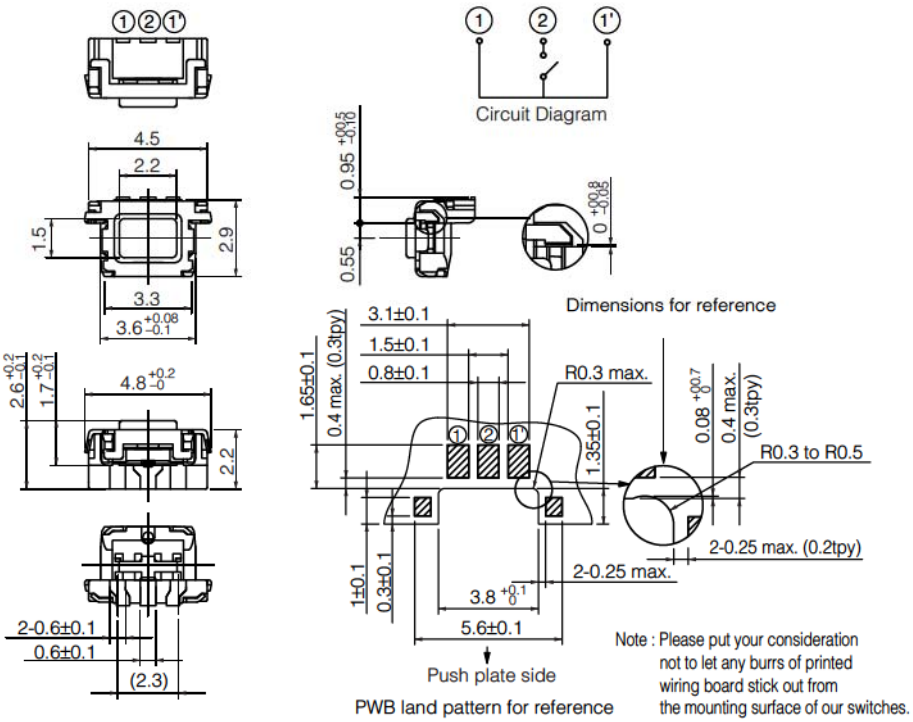

∗ Height from surface of PCB : 0.95 mm

Part Numbers	Operating Force	Height	Push Plate Color	Operating Life
EVPAEBB2A	1.6 N	0.95 mm	Black	200000 cycles
EVPAEDB2A	3.0 N	0.95 mm	Black	200000 cycles

■ Recommended Reflow Soldering Conditions

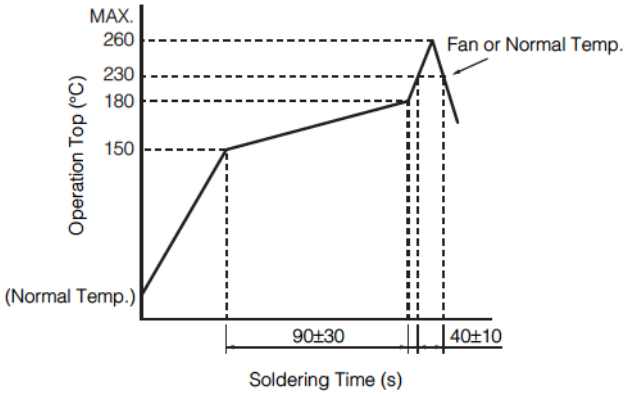

● Embossed Carrier Taping

Tape width=12.0 mm

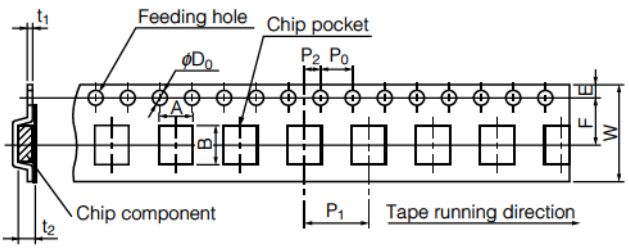

Unit: mm

Part No.	Height	A	B	W	F	E	P_1	P_2	P_0	D_0 Dia	t_1	t_2
EVPAE	2.9	5.5±0.2	2.9±0.2	12.0±0.3	5.5±0.1	1.75±0.10	8.0±0.1	2.0±0.1	4.0±0.1	$1.5^{+0.1}_{0}$	0.3±0.1	3.3±0.20

● Standard Reel Dimensions in mm (not to scale)

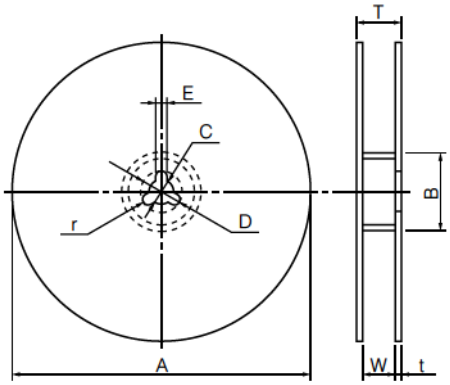

Item	A	B	C	D	E
Rate (mm)	φ380.0±2.0	φ80.0±1.0	φ13.0±0.5	φ21.0±1.0	2.0±0.5

Item	W	T	t	r
Rate (mm)	13.5±1.0	17.5±1.0	—	—

Design and specifications are each subject to change without notice. Ask factory for the current technical specifications before purchase and/or use.
Should a safety concern arise regarding this product, please be sure to contact us immediately.

6.2 mm×2.5 mm Side-operational Edge Mount Light Touch Switches

Type: **EVQP4**

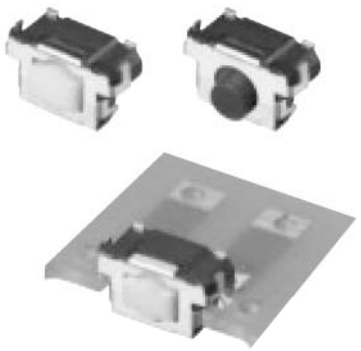

■ Features

- External dimensions : 6.2 mm×2.55 mm (Excluding the push plate), Height 3.5 mm (EVQP4 Type : Printed circuit board being as low as 1.35 mm)
- Side-operational middle stroke type (0.7 mm) with a high operating force (5.0 N)
- Improved soldering strength in the operating direction when mounted on PC board edge

■ Recommended Applications

- Operation switches for portable electronic equipment (Mobile phones, Digital still cameras, Camcorders Portable audio players, etc.)
- Keyless entry (car electronics)
- Car audio equipment

■ Explanation of Part Numbers

1	2	3	4	5	6	7	8	9
E	V	Q	P	4				
Product Code			Type			Height		Push Plate Color

■ Specifications

Travel Type		Middle Push Travel	Short Push Travel
Type		Snap action / Push-on type SPST	
Electrical	Rating	10 μA 2 Vdc to 20 mA 15 Vdc (Resistive load)	
	Contact Resistance	100 mΩ max.	
	Insulation Resistance	100 MΩ min. (at 100 Vdc)	
	Dielectric Withstanding Voltage	250 Vac (1 minute)	
	Bouncing	10 ms max. (ON, OFF)	
Mechanical	Operating Force	2.5 N, 3.5 N, 5.0 N	1.0 N, 1.6 N, 2.4 N, 3.5 N
	Travel	0.70 mm±0.2 mm	0.25 mm $^{+0.05}_{-0.15}$ mm
	Push Strength	50 N (1 minute)	
Endurance	Operating Life	2.5 N: 1000000 cycles min. 3.5 N: 500000 cycles min. 5.0 N: 200000 cycles min.	1.0 N, 1.6 N: 1000000 cycles min. 2.4 N: 500000 cycles min. 3.5 N: 200000 cycles min.
Operating Temperature		−40 °C to +85 °C	
Storage Temperature		−40 °C to +85 °C (Bulk) −20 °C to +60 °C (Taping)	
Minimum Quantity/Packing Unit		2500 pcs. Embossed Taping (Reel Pack)	
Quantity/Carton		12500 pcs.	

Design and specifications are each subject to change without notice. Ask factory for the current technical specifications before purchase and/or use.
Should a safety concern arise regarding this product, please be sure to contact us immediately.

00 Oct. 2012

■ Dimensions in mm (not to scale)

No. 1

EVQP4

Middle push travel

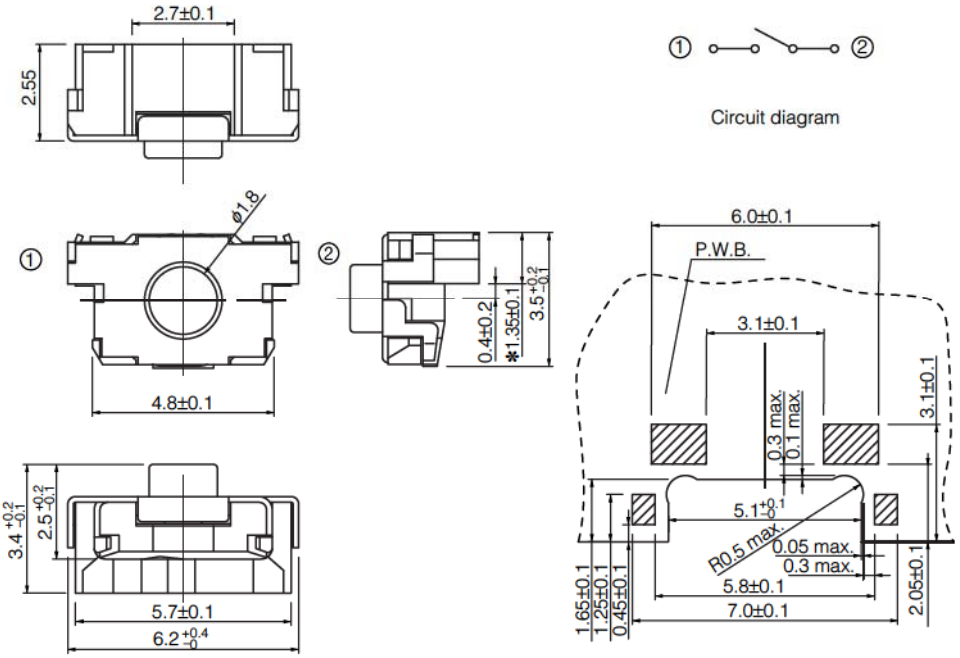

* Height from surface of PCB : 1.35 mm

Part Numbers	Operating Force	Height	Push Plate Color	Operating Life
EVQP4HB3B	2.5 N	3.5 mm	Blue	1000000 cycles
EVQP4KB3Q	3.5 N	3.5 mm	Grey	500000 cycles
EVQP4MB3K	5.0 N	3.5 mm	Black	200000 cycles

No. 2

EVQP4

Short push travel

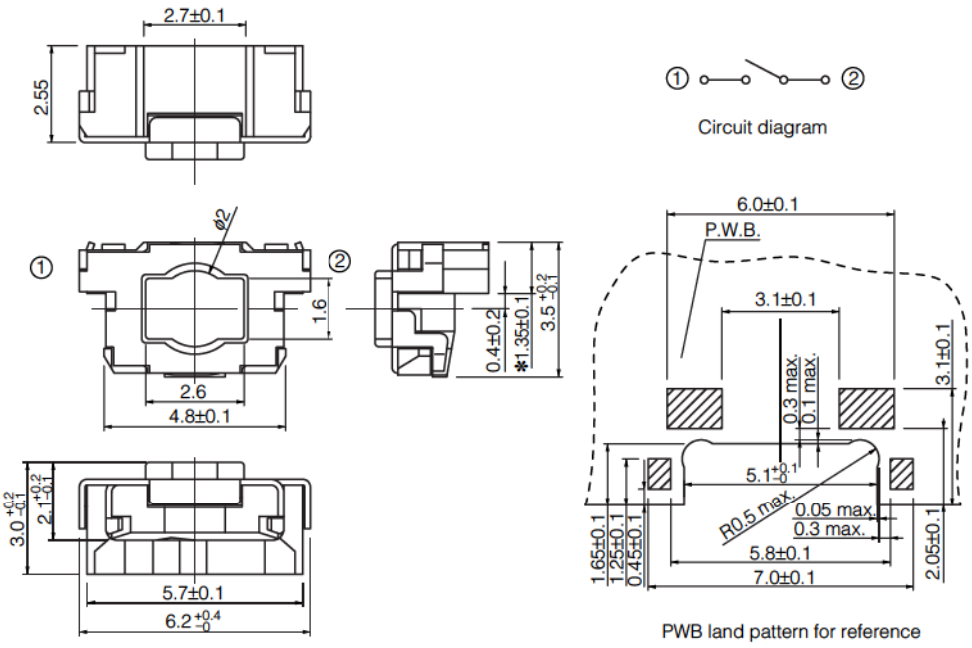

* Height from surface of PCB : 1.35 mm

Part Numbers	Operating Force	Height	Push Plate Color	Operating Life
EVQP40B3M	1.0 N	3.5 mm	Natural	1000000 cycles
EVQP42B3M	1.6 N	3.5 mm	Natural	1000000 cycles
EVQP44B3M	2.4 N	3.5 mm	Natural	500000 cycles
EVQP46B3M	3.5 N	3.5 mm	Natural	200000 cycles

Design and specifications are each subject to change without notice. Ask factory for the current technical specifications before purchase and/or use.
Should a safety concern arise regarding this product, please be sure to contact us immediately.

■ Recommended Reflow Soldering Conditions

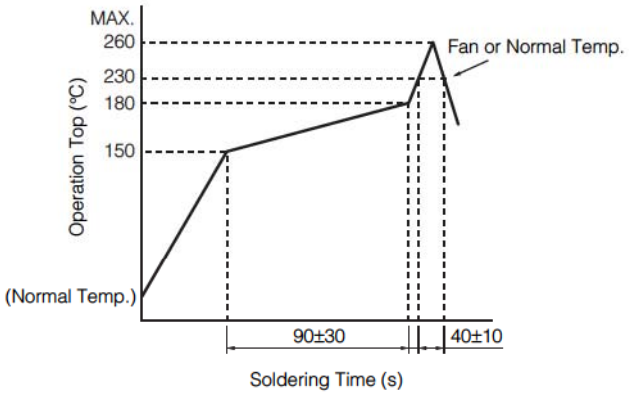

● Embossed Carrier Taping

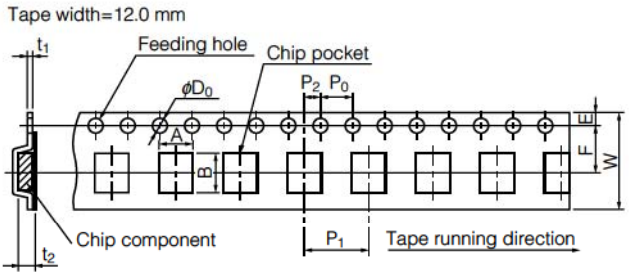

Unit: mm

Part No.	Height	A	B	W	F	E	P_1	P_2	P_0	D_0 Dia.	t_1	t_2
EVQP4	3.5	6.5±0.2	3.9±0.2	12.0±0.3	5.5±0.1	1.75±0.10	8.0±0.1	2.0±0.1	4.0±0.1	$1.5^{+0.1}_{-0}$	0.4±0.1	3.75±0.20

● Standard Reel Dimensions in mm (not to scale)

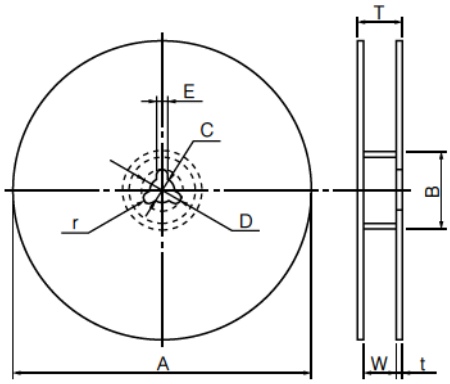

Item	A	B	C	D	E
Rate (mm)	φ370.0±2.0	φ50.0 min.	φ13.0±0.5	φ21.0±1.0	2.0±0.5

Item	W	T	t	r
Rate (mm)	14.0±1.5	—	1.0 to 3.0	1.0±0.5

Design and specifications are each subject to change without notice. Ask factory for the current technical specifications before purchase and/or use.
Should a safety concern arise regarding this product, please be sure to contact us immediately.

6.1 mm×4.0 mm Side-operational SMD Light Touch Switches

Type: **EVQPS**

■ Features

- External dimensions : 6.1 mm×4.0 mm, Height 1.8 mm
- Terminal shapes : straight, J-bent

■ Recommended Applications

- Operating switches for other electronic equipment

■ Explanation of Part Numbers

1	2	3	4	5	6	7	8	9
E	V	Q	P	S		0	2	K
			Type					

6th		Terminal Shape	Operating Force
Embossed Taping			
Without Boss	With Boss		
C	D	J-bent	1.6 N
L	M	Straight	
G	H	J-bent	2.2 N
Q	R	Straight	

7th & 8th	Height
02	1.8 mm

9th	Push Plate Color
K	Black

■ Specifications

Type		Snap action / Push-on type SPST	
Electrical	Rating	10 μA 2 Vdc to 50 mA 12 Vdc (Resistiv load)	
	Contact Resistance	500 mΩ max.	
	Insulation Resistance	100 MΩ min. (at 100 Vdc)	
	Dielectric Withstanding Voltage	250 Vac for 1 minute	
	Bouncing	10 ms max. (ON, OFF)	
Mechanical	Operating Force	1.6 $N^{+0.7}_{-0.4}$ N	2.2 $N^{+0.8}_{-0.7}$ N
	Travel	0.3 mm $^{+0.1}_{-0.2}$ mm	
	Push Strength	30 N for 1 minute	
Endurance	Operating Life	100000 cycles min.	
Operating Temperature		−20 °C to +70 °C	
Storage Temperature		−40 °C to +85 °C (Bulk) −20 °C to +60 °C (Taping)	
Minimum Quantity/Packing Unit		4000 pcs. Embossed Taping (Reel Pack)	
Quantity/Carton		16000 pcs.	

Design and specifications are each subject to change without notice. Ask factory for the current technical specifications before purchase and/or use.
Should a safety concern arise regarding this product, please be sure to contact us immediately.

00 Oct. 2012

■ Dimensions in mm (not to scale)

No. 1

EVQPSD
EVQPSH

J-bent terminals, with Boss

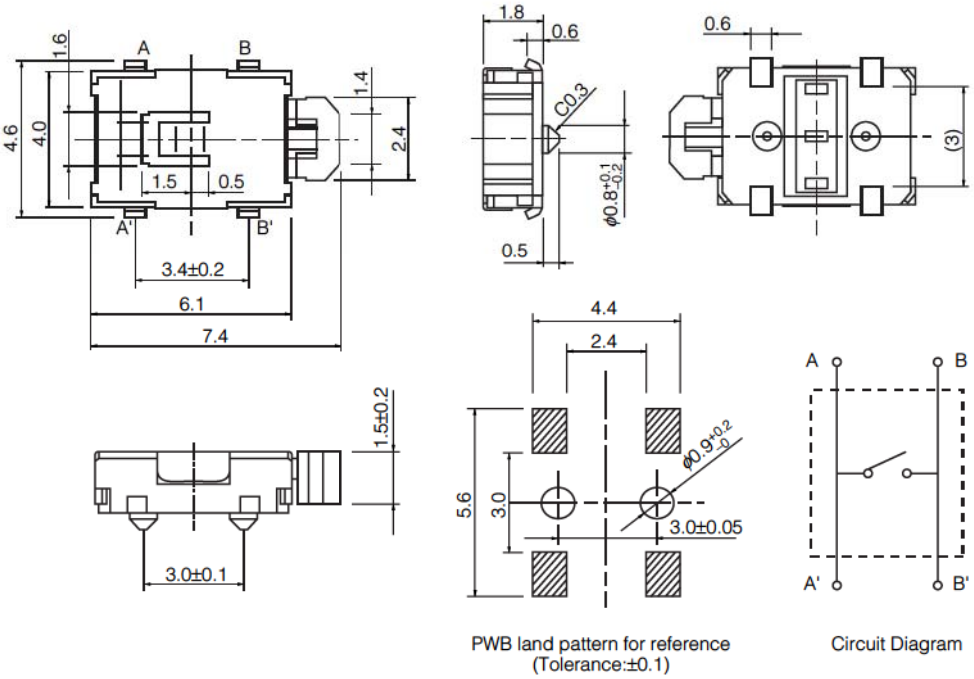

Part Numbers	Operating Force	Height	Push Plate Color	Operating Life
EVQPSD02K	1.6 N	1.8 mm	Black	100000 cycles
EVQPSH02K	2.2 N	1.8 mm	Black	100000 cycles

No. 2

EVQPSM
EVQPSR

Straight terminals, with Boss

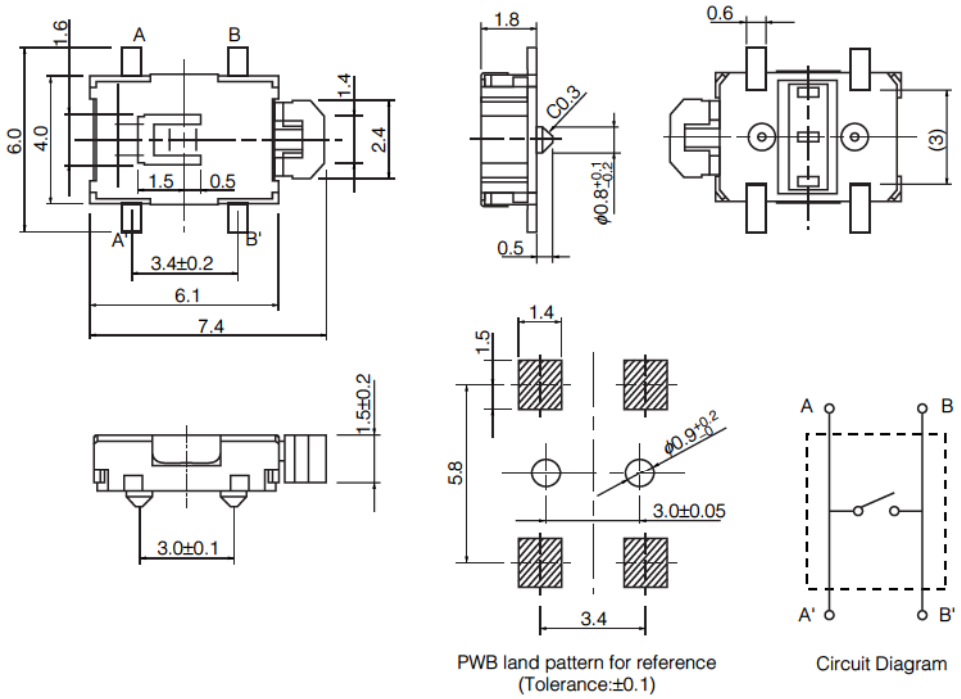

Part Numbers	Operating Force	Height	Push Plate Color	Operating Life
EVQPSM02K	1.6 N	1.8 mm	Black	100000 cycles
EVQPSR02K	2.2 N	1.8 mm	Black	100000 cycles

Design and specifications are each subject to change without notice. Ask factory for the current technical specifications before purchase and/or use.
Should a safety concern arise regarding this product, please be sure to contact us immediately.

■ Dimensions in mm (not to scale)

No. 3

EVQPSC
EVQPSG

J-bent terminals, without Boss

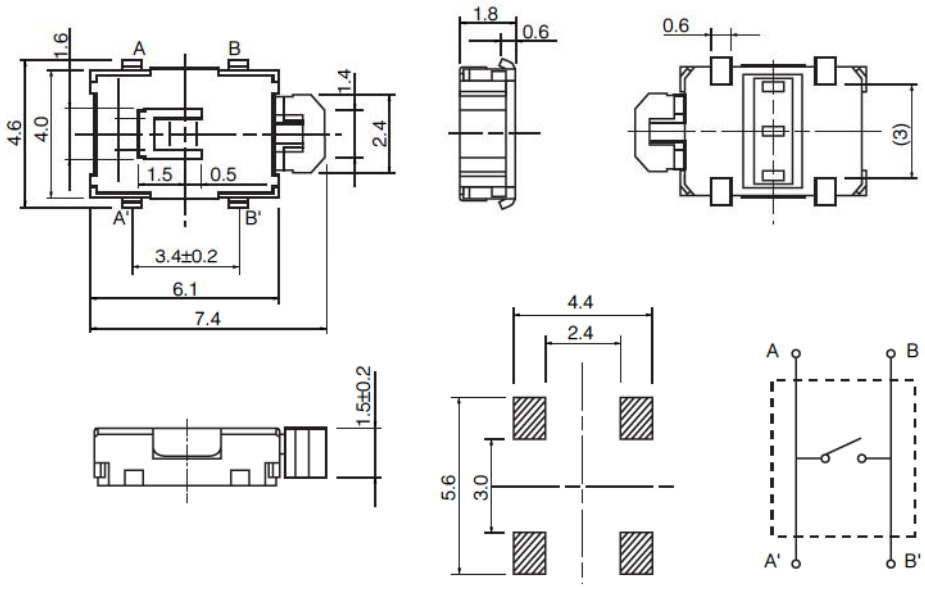

PWB land pattern for reference (Tolerance:±0.1)

Circuit Diagram

Part Numbers	Operating Force	Height	Push Plate Color	Operating Life
EVQPSC02K	1.6 N	1.8 mm	Black	100000 cycles
EVQPSG02K	2.2 N	1.8 mm	Black	100000 cycles

No. 4

EVQPSL
EVQPSQ

Straight terminals, without Boss

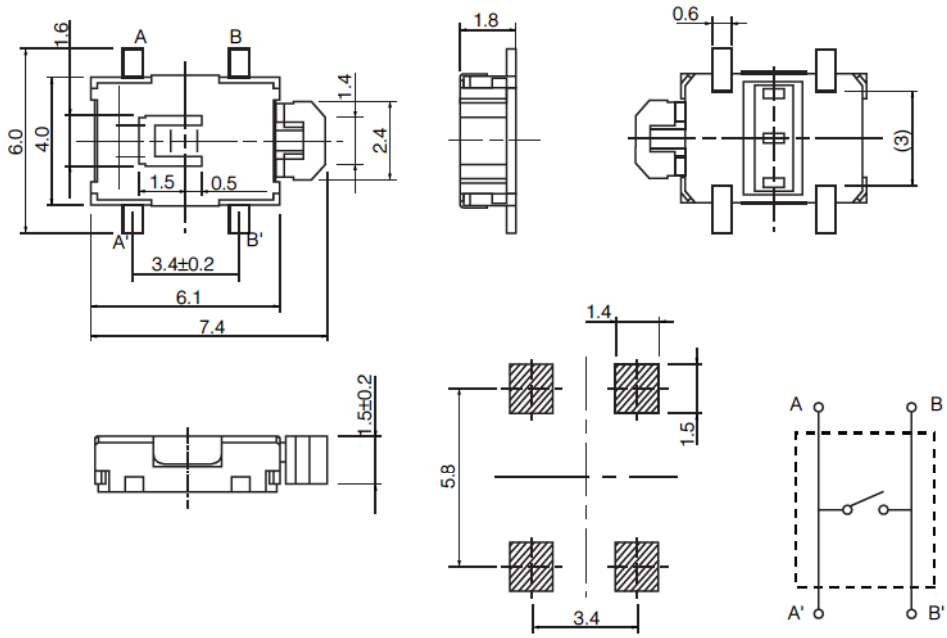

PWB land pattern for reference (Tolerance:±0.1)

Circuit Diagram

Part Numbers	Operating Force	Height	Push Plate Color	Operating Life
EVQPSL02K	1.6 N	1.8 mm	Black	100000 cycles
EVQPSQ02K	2.2 N	1.8 mm	Black	100000 cycles

Design and specifications are each subject to change without notice. Ask factory for the current technical specifications before purchase and/or use.
Should a safety concern arise regarding this product, please be sure to contact us immediately.

■ Recommended Reflow Soldering Conditions

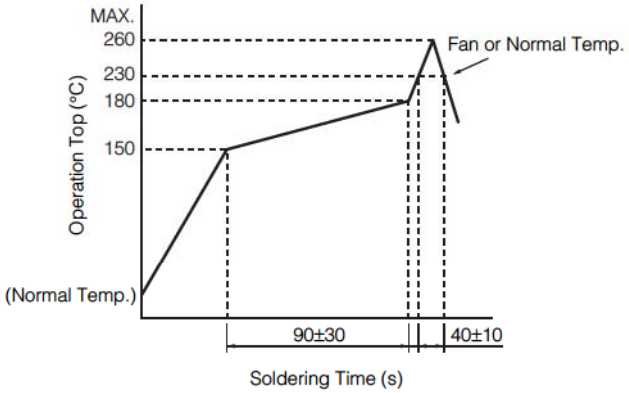

● Embossed Carrier Taping

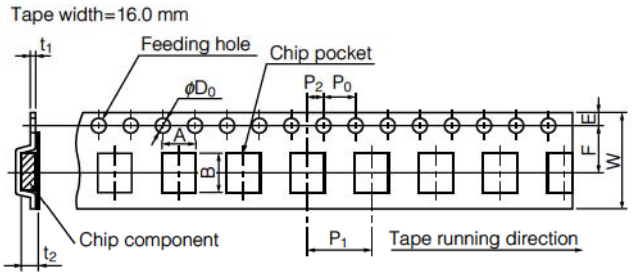

Unit: mm

Part No.	Height	A	B	W	F	E	P_1	P_2	P_0	D_0 Dia.	t_1	t_2
EVQPS	1.8	6.8±0.2	8.0±0.2	16.0±0.3	7.5±0.1	1.75±0.10	8.0±0.1	2.0±0.1	4.0±0.1	$1.5^{+0.1}_{-0}$	0.30±0.05	2.7±0.2

● Standard Reel Dimensions in mm (not to scale)

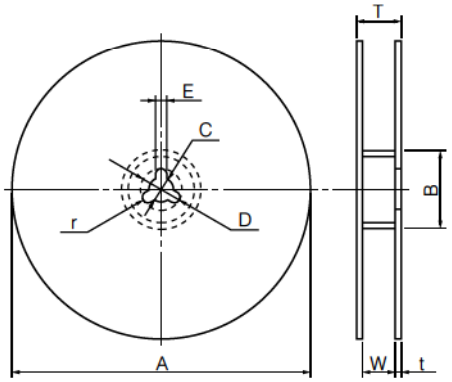

Item	A	B	C	D	E
Rate (mm)	φ370.0±2.0	φ50.0 min.	φ13.0±0.5	φ21.0±1.0	2.0±0.5

Item	W	T	t	r
Rate (mm)	18.0±1.5	—	1.0 to 3.0	1.0±0.5

Design and specifications are each subject to change without notice. Ask factory for the current technical specifications before purchase and/or use.
Should a safety concern arise regarding this product, please be sure to contact us immediately.

5N Type Light Touch Switches

Type: **EVQPA/EVQPB**

■ Features

- Wealth of product types: With or without a ground terminal, vertical type, snap-in terminals, etc.
- Can be automatically dip-soldered: Integral molding of the terminals and main body prevents the escape of flux.

■ Recommended Applications

- Operating switches for other electronic equipment

■ Explanation of Part Numbers

1	2	3	4	5	6	7	8	9
E	V	Q	P	A/B				
Product Code			Type		Height			Push Plate Color

■ Product Chart

○=In production

Operating Force	Positioning Pin	Ground Terminal	Height			
			4.3 mm	5.0 mm	7.0 mm	9.5 mm
1.0 N	Without positioning pin	With ground terminal	○	○	○	○
		Without ground terminal	○	○	○	○
1.3 N	Without positioning pin	With ground terminal	○	○	○	○
		Without ground terminal	○	○	○	○
1.6 N	Without positioning pin	With ground terminal	○	○	○	○
		Without ground terminal	○	○	○	○
2.6 N	Without positioning pin	With ground terminal	○	○	○	○
		Without ground terminal	○	○	○	○

■ Specifications

Type		Snap action/Push-on type SPST	
Electrical	Circuit Diagram	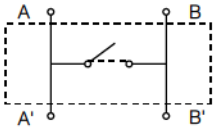	
	Rating	10 μA 2 Vdc to 20 mA 15 Vdc (Resistiv load)	
	Contact Resistance	50 mΩ max.	
	Insulation Resistance	50 MΩ min. (at 100 Vdc)	
	Dielectric Withstanding Voltage	250 Vac for 1 minute	
	Bouncing	3 ms max. (ON) 8 ms max. (OFF)	
Mechanical	Operating Force	1.0 N±0.4 N 1.3 N±0.4 N 1.6 N±0.5 N	2.6 N±0.6 N
	Travel	0.25 mm±0.10 mm	
Endurance	Operating Life	100000 cycles min.*	50000 cycles min.
Operating Temperature		–20 °C to +70 °C	
Storage Temperature		–40 °C to +85 °C (Bulk)	
Minimum Quantity/ Packing Unit	Top-push	500 pcs. Polyethylene Bag (Bulk)	
Quantity/Carton	Top-push	10000 pcs.	

*1 million cycles also available, consult our salesmen.

Design and specifications are each subject to change without notice. Ask factory for the current technical specifications before purchase and/or use.
Should a safety concern arise regarding this product, please be sure to contact us immediately.

00 Oct. 2012

■ Dimensions in mm (not to scale)

No. 1

EVQPA

Without ground terminal

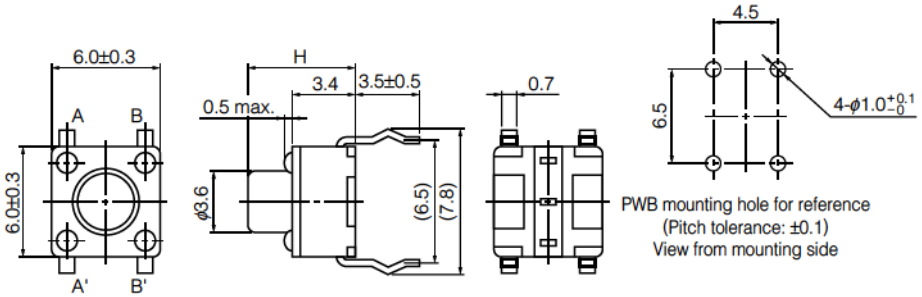

Part Numbers	Operating Force	H=Height	Push Plate Color	Operating Life
EVQPAC04M	1.0 N	4.3 mm	White	100000 cycles
EVQPAC05R	1.0 N	5.0 mm	Red	100000 cycles
EVQPAC07K	1.0 N	7.0 mm	Black	100000 cycles
EVQPAC09K	1.0 N	9.5 mm	Black	100000 cycles
EVQPAD04M	1.3 N	4.3 mm	White	100000 cycles
EVQPAD05R	1.3 N	5.0 mm	Red	100000 cycles
EVQPAD07K	1.3 N	7.0 mm	Black	100000 cycles
EVQPAD09K	1.3 N	9.5 mm	Black	100000 cycles
EVQPAE04M	1.6 N	4.3 mm	White	100000 cycles
EVQPAE05R	1.6 N	5.0 mm	Red	100000 cycles
EVQPAE07K	1.6 N	7.0 mm	Black	100000 cycles
EVQPAE09K	1.6 N	9.5 mm	Black	100000 cycles
EVQPAG04M	2.6 N	4.3 mm	White	50000 cycles
EVQPAG05R	2.6 N	5.0 mm	Red	50000 cycles
EVQPAG07K	2.6 N	7.0 mm	Black	50000 cycles
EVQPAG09K	2.6 N	9.5 mm	Black	50000 cycles

Design and specifications are each subject to change without notice. Ask factory for the current technical specifications before purchase and/or use.
Should a safety concern arise regarding this product, please be sure to contact us immediately.

■ Dimensions in mm (not to scale)

No. 2

EVQPB

With ground terminal

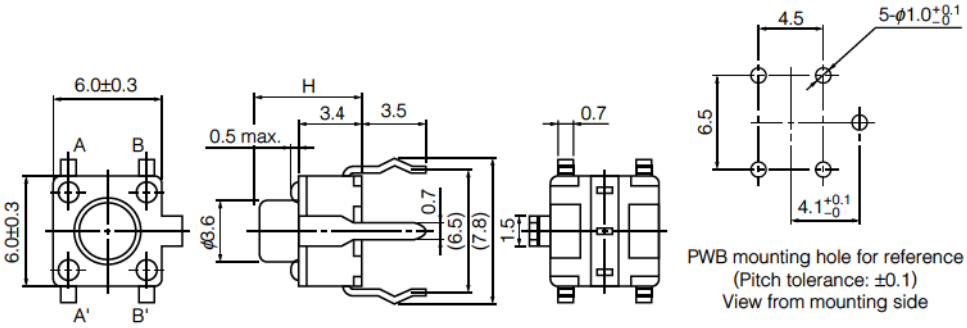

Part Numbers	Operating Force	H=Height	Push Plate Color	Operating Life
EVQPBC04M	1.0 N	4.3 mm	White	100000 cycles
EVQPBC05R	1.0 N	5.0 mm	Red	100000 cycles
EVQPBC07K	1.0 N	7.0 mm	Black	100000 cycles
EVQPBC09K	1.0 N	9.5 mm	Black	100000 cycles
EVQPBD04M	1.3 N	4.3 mm	White	100000 cycles
EVQPBD05R	1.3 N	5.0 mm	Red	100000 cycles
EVQPBD07K	1.3 N	7.0 mm	Black	100000 cycles
EVQPBD09K	1.3 N	9.5 mm	Black	100000 cycles
EVQPBE04M	1.6 N	4.3 mm	White	100000 cycles
EVQPBE05R	1.6 N	5.0 mm	Red	100000 cycles
EVQPBE07K	1.6 N	7.0 mm	Black	100000 cycles
EVQPBE09K	1.6 N	9.5 mm	Black	100000 cycles
EVQPBG04M	2.6 N	4.3 mm	White	50000 cycles
EVQPBG05R	2.6 N	5.0 mm	Red	50000 cycles
EVQPBG07K	2.6 N	7.0 mm	Black	50000 cycles
EVQPBG09K	2.6 N	9.5 mm	Black	50000 cycles

Design and specifications are each subject to change without notice. Ask factory for the current technical specifications before purchase and/or use.
Should a safety concern arise regarding this product, please be sure to contact us immediately.

5N Type Side-operational Light Touch Switches

Type: **EVQPF**

■ Features

- Wealth of product types: Horizontal type, snap-in terminals, etc.
- Can be automatically dip-soldered: Integral molding of the terminals and main body prevents the escape of flux.

■ Recommended Applications

- Operating switches for other electronic equipment

■ Explanation of Part Numbers

1	2	3	4	5	6	7	8	9
E	V	Q	P	F				
Product Code			Type			Height		Push Plate Color

■ Specifications

Type		Snap action/Push-on type SPST	
Electrical	Circuit Diagram	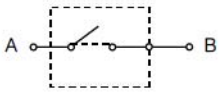	
	Rating	10 μA 2 Vdc to 20 mA 15 Vdc (Resistiv load)	
	Contact Resistance	50 mΩ max.	
	Insulation Resistance	50 MΩ min. (at 100 Vdc)	
	Dielectric Withstanding Voltage	250 Vac for 1 minute	
	Bouncing	3 ms max. (ON) 8 ms max. (OFF)	
Mechanical	Operating Force	1.0 N±0.4 N 1.3 N±0.4 N 1.6 N±0.5 N	2.6 N±0.6 N
	Travel	0.25 mm±0.10 mm	
Endurance	Operating Life	100000 cycles min.*	50000 cycles min.
Operating Temperature		−20 °C to +70 °C	
Storage Temperature		−40 °C to +85 °C (Bulk)	
Minimum Quantity/ Packing Unit	Top-push	500 pcs. Polyethylene Bag (Bulk)	
Quantity/Carton	Top-push	10000 pcs.	

*1 million cycles also available, consult our salesmen.

Design and specifications are each subject to change without notice. Ask factory for the current technical specifications before purchase and/or use.
Should a safety concern arise regarding this product, please be sure to contact us immediately.

00 Oct. 2012

■ Dimensions in mm (not to scale)

EVQPF

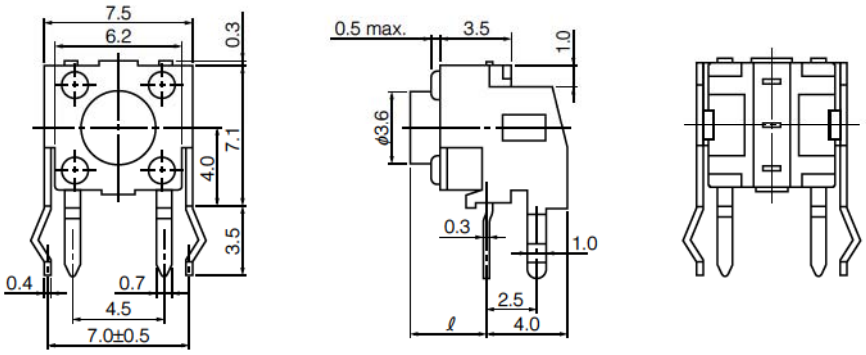

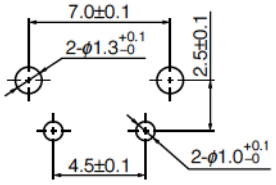

PWB mounting hole for reference
(PWB thickness=1.6 mm)
View from mounting side

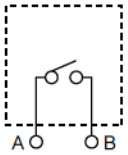

Circuit diagram

Part Numbers	Operating Force	ℓ =Push Plate Place	Push Plate Color	Operating Life
EVQPF003M	1.0 N	3.15 mm	White	100000 cycles
EVQPF004R	1.0 N	3.85 mm	Red	100000 cycles
EVQPF006K	1.0 N	5.85 mm	Black	100000 cycles
EVQPF008K	1.0 N	8.35 mm	Black	100000 cycles
EVQPF103M	1.3 N	3.15 mm	White	100000 cycles
EVQPF104R	1.3 N	3.85 mm	Red	100000 cycles
EVQPF106K	1.3 N	5.85 mm	Black	100000 cycles
EVQPF108K	1.3 N	8.35 mm	Black	100000 cycles
EVQPF203M	1.6 N	3.15 mm	White	100000 cycles
EVQPF204R	1.6 N	3.85 mm	Red	100000 cycles
EVQPF206K	1.6 N	5.85 mm	Black	100000 cycles
EVQPF208K	1.6 N	8.35 mm	Black	100000 cycles
EVQPF303M	2.6 N	3.15 mm	White	50000 cycles
EVQPF304R	2.6 N	3.85 mm	Red	50000 cycles
EVQPF306K	2.6 N	5.85 mm	Black	50000 cycles
EVQPF308K	2.6 N	8.35 mm	Black	50000 cycles

Design and specifications are each subject to change without notice. Ask factory for the current technical specifications before purchase and/or use.
Should a safety concern arise regarding this product, please be sure to contact us immediately.

5N Type 2R Light Touch Switches

Type: **EVQ2**

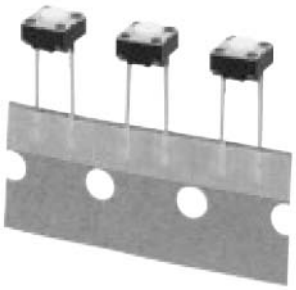

■ Features

- Wealth of product types: With or without a ground terminal, vertical type, snap-in terminals, etc.
- Can be automatically dip-soldered: Integral molding of the terminals and main body prevents the escape of flux.

■ Recommended Applications

- Operating switches for electronic equipment

■ Explanation of Part Numbers

1	2	3	4	5	6	7	8	9
E	V	Q	2					
Product Code			Type			Height		Push Plate Color

■ Product Chart

○=Standard

Operating Force	Positioning Pin	Ground Terminal	Height			
			4.3 mm	5.0 mm	7.0 mm	9.5 mm
1.0 N	Without positioning pin	With ground terminal	○	○	○	○
		Without ground terminal	○	○	○	○
1.3 N	Without positioning pin	With ground terminal	○	○	○	○
		Without ground terminal	○	○	○	○
1.6 N	Without positioning pin	With ground terminal	○	○	○	○
		Without ground terminal	○	○	○	○
2.6 N	Without positioning pin	With ground terminal	○	○	○	○
		Without ground terminal	○	○	○	○

■ Specifications

Type		Snap action/Push-on type SPST	
Electrical	Circuit Diagram	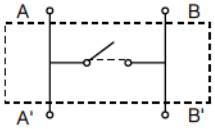	
	Rating	10 µA 2 Vdc to 20 mA 15 Vdc (Resistiv load)	
	Contact Resistance	50 mΩ max.	
	Insulation Resistance	50 MΩ min. (at 100 Vdc)	
	Dielectric Withstanding Voltage	250 Vac for 1 minute	
	Bouncing	3 ms max. (ON) 8 ms max. (OFF)	
Mechanical	Operating Force	1.0 N±0.4 N 1.3 N±0.4 N 1.6 N±0.5 N	2.6 N±0.6 N
	Travel	0.25 mm±0.10 mm	
Endurance	Operating Life	100000 cycles min.*	50000 cycles min.
Operating Temperature		–20 °C to +70 °C	
Storage Temperature		–40 °C to +85 °C (Bulk) –20 °C to +40 °C (Taping)	
Minimum Quantity/ Packing Unit	Top-push	1000 pcs. Radial Taping (Reel Pack)	
Quantity/Carton	Top-push	10000 pcs.	

*1 million cycles also available, consult our salesmen.

Design and specifications are each subject to change without notice. Ask factory for the current technical specifications before purchase and/or use.
Should a safety concern arise regarding this product, please be sure to contact us immediately.

00 Oct. 2012

■ Dimensions in mm (not to scale)

EVQ2

With ground terminal

2-terminals type
Without ground terminal

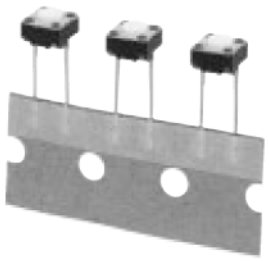

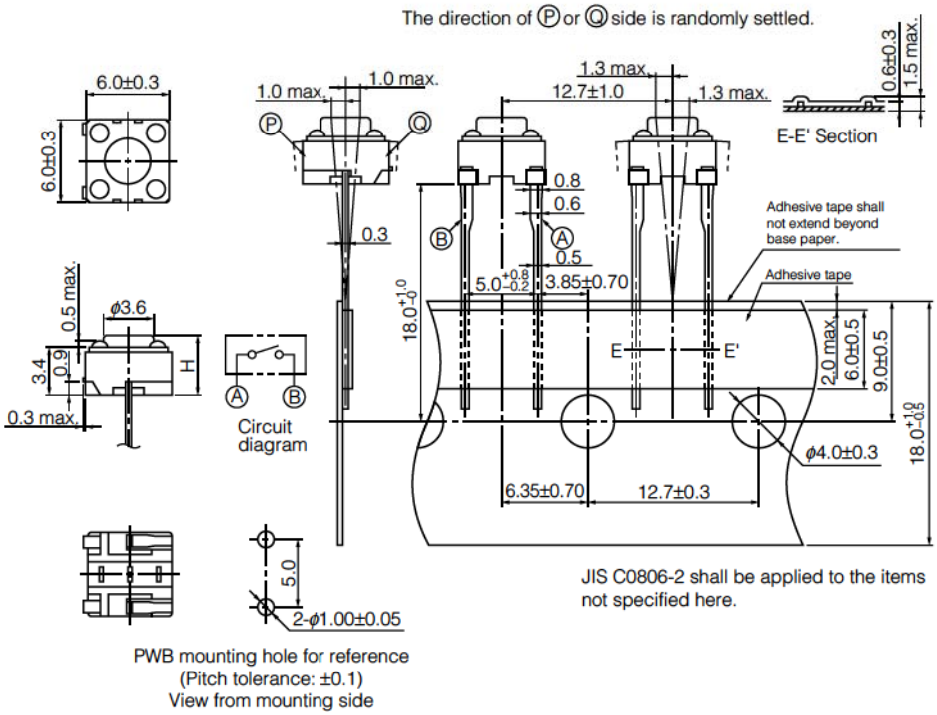

Part Numbers	Operating Force	H=Height	Push Plate Color	Operating Life
EVQ21304M	1.0 N	4.3 mm	White	100000 cycles
EVQ21305R	1.0 N	5.0 mm	Red	100000 cycles
EVQ21307K	1.0 N	7.0 mm	Black	100000 cycles
EVQ21309K	1.0 N	9.5 mm	Black	100000 cycles
EVQ21404M	1.3 N	4.3 mm	White	100000 cycles
EVQ21405R	1.3 N	5.0 mm	Red	100000 cycles
EVQ21407K	1.3 N	7.0 mm	Black	100000 cycles
EVQ21409K	1.3 N	9.5 mm	Black	100000 cycles
EVQ21504M	1.6 N	4.3 mm	White	100000 cycles
EVQ21505R	1.6 N	5.0 mm	Red	100000 cycles
EVQ21507K	1.6 N	7.0 mm	Black	100000 cycles
EVQ21509K	1.6 N	9.5 mm	Black	100000 cycles
EVQ22704M	2.6 N	4.3 mm	White	50000 cycles
EVQ22705R	2.6 N	5.0 mm	Red	50000 cycles
EVQ22707K	2.6 N	7.0 mm	Black	50000 cycles
EVQ22709K	2.6 N	9.5 mm	Black	50000 cycles

Design and specifications are each subject to change without notice. Ask factory for the current technical specifications before purchase and/or use.
Should a safety concern arise regarding this product, please be sure to contact us immediately.

5N Type Side-operational 4R Light Touch Switches

Type: **EVQPC**

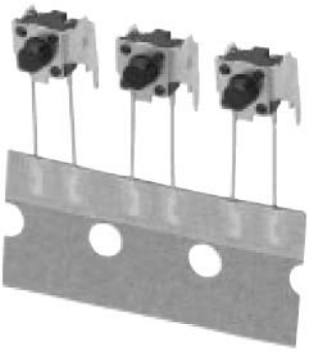

■ Features

- Wealth of product types: Horizontal type, snap-in terminals, etc.
- Can be automatically dip-soldered: Integral molding of the terminals and main body prevents the escape of flux.

■ Recommended Applications

- Operating switches for electronic equipment

■ Explanation of Part Numbers

1	2	3	4	5	6	7	8	9
E	V	Q	P	C				
Product Code			Type			Height		Push Plate Color

■ Specifications

Type		Snap action/Push-on type SPST	
Electrical	Circuit Diagram	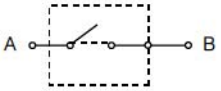	
	Rating	10 μA 2 Vdc to 20 mA 15 Vdc (Resistiv load)	
	Contact Resistance	50 mΩ max.	
	Insulation Resistance	50 MΩ min. (at 100 Vdc)	
	Dielectric Withstanding Voltage	250 Vac for 1 minute	
	Bouncing	3 ms max. (ON) 8 ms max. (OFF)	
Mechanical	Operating Force	1.0 N±0.4 N 1.3 N±0.4 N 1.6 N±0.5 N	2.6 N±0.6 N
	Travel	0.25 mm±0.10 mm	
Endurance	Operating Life	100000 cycles min.*	50000 cycles min.
Operating Temperature		−20 °C to +70 °C	
Storage Temperature		−40 °C to +85 °C (Bulk) −20 °C to +40 °C (Taping)	
Minimum Quantity/Packing Unit		700 pcs. Radial Taping (Reel Pack)	
Quantity/Carton		7000 pcs.	

*1 million cycles also available, consult our salesmen.

Design and specifications are each subject to change without notice. Ask factory for the current technical specifications before purchase and/or use.
Should a safety concern arise regarding this product, please be sure to contact us immediately.

00 Oct. 2012

■ Dimensions in mm (not to scale)

EVQPC

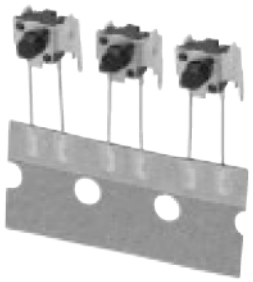

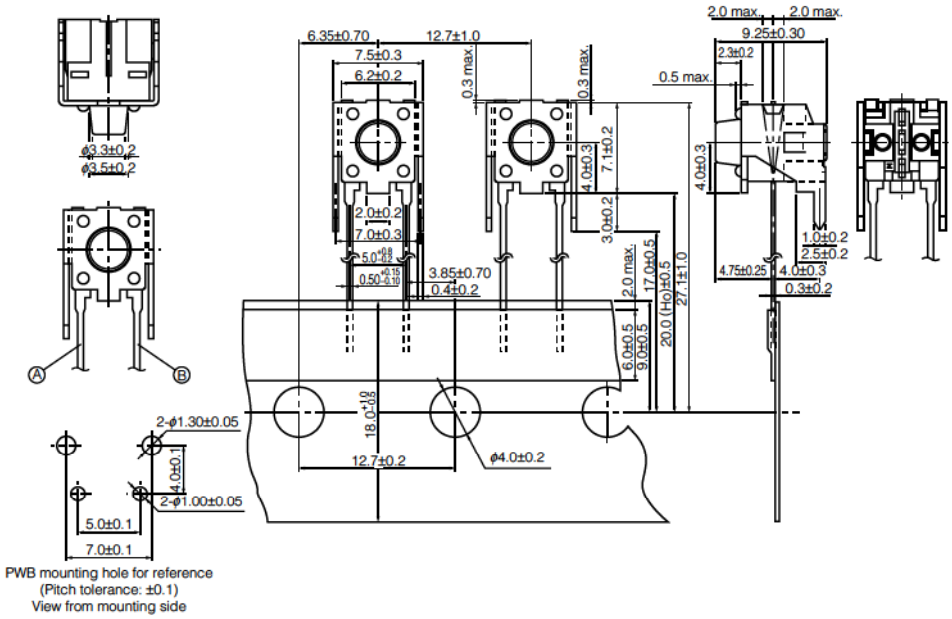

Part Numbers	Operating Force	Push Plate Place	Push Plate Color	Operating Life	Insert Machine	H0 Dimension
EVQPC005K	1.0 N	4.75 mm	Black	100000 cycles	Panasert	20 mm
EVQPC105K	1.3 N	4.75 mm	Black	100000 cycles	Panasert	20 mm
EVQPC205K	1.6 N	4.75 mm	Black	100000 cycles	Panasert	20 mm
EVQPC305K	2.6 N	4.75 mm	Black	50000 cycles	Panasert	20 mm
EVQPC405K	1.0 N	4.75 mm	Black	100000 cycles	Avisert	21 mm
EVQPCP05K	1.3 N	4.75 mm	Black	100000 cycles	Avisert	21 mm
EVQPC605K	1.6 N	4.75 mm	Black	100000 cycles	Avisert	21 mm
EVQPC705K	2.6 N	4.75 mm	Black	50000 cycles	Avisert	21 mm

Design and specifications are each subject to change without notice. Ask factory for the current technical specifications before purchase and/or use.
Should a safety concern arise regarding this product, please be sure to contact us immediately.

Round Type 2R Light Touch Switches

Type: **EVQ11**

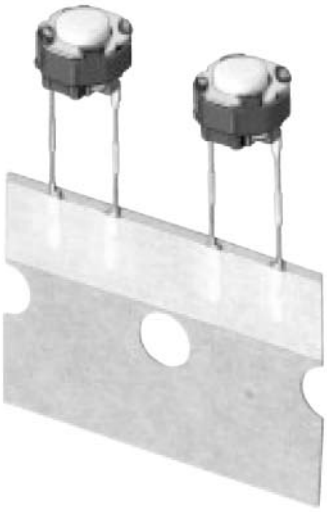

■ Features

- External dimensions : 6.0 mm×6.0 mm, Height 3.9 mm (Excluding the push plate)
- The cast-processed terminals improve the mountability

■ Recommended Applications

- Operating switches for electronic equipment

■ Explanation of Part Numbers

1	2	3	4	5	6	7	8	9
E	V	Q	1	1				
Product Code			Type			Height		Push Plate Color

■ Specifications

Type		Snap action/Push-on type SPST	
Electrical	Circuit Diagram	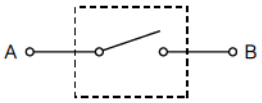	
	Rating	10 μA 2 Vdc to 20 mA 15 Vdc (Resistive load)	
	Contact Resistance	50 mΩ max.	
	Insulation Resistance	50 MΩ min. (at 100 Vdc)	
	Dielectric Withstanding Voltage	250 Vac for 1 minute	
	Bouncing	3 ms max. (ON) 8 ms max. (OFF)	
Mechanical	Operating Force	1.0 N±0.4 N 1.3 N±0.4 N 1.6 N±0.5 N	2.6 N±0.6 N
	Travel	0.25 mm±0.10 mm	
Endurance	Operating Life	100000 cycles min. *	50000 cycles min.
Operating Temperature		–20 °C to +70 °C	
Storage Temperature		–40 °C to +85 °C (Bulk) –20 °C to +40 °C (Taping)	
Minimum Quantity/Packing Unit		2500 pcs. Radial Taping (Reel Pack)	
Quantity/Carton		25000 pcs.	

* 1 million cycles also available, consult our salesmen.

Design and specifications are each subject to change without notice. Ask factory for the current technical specifications before purchase and/or use.
Should a safety concern arise regarding this product, please be sure to contact us immediately.

■ Dimensions in mm (not to scale)

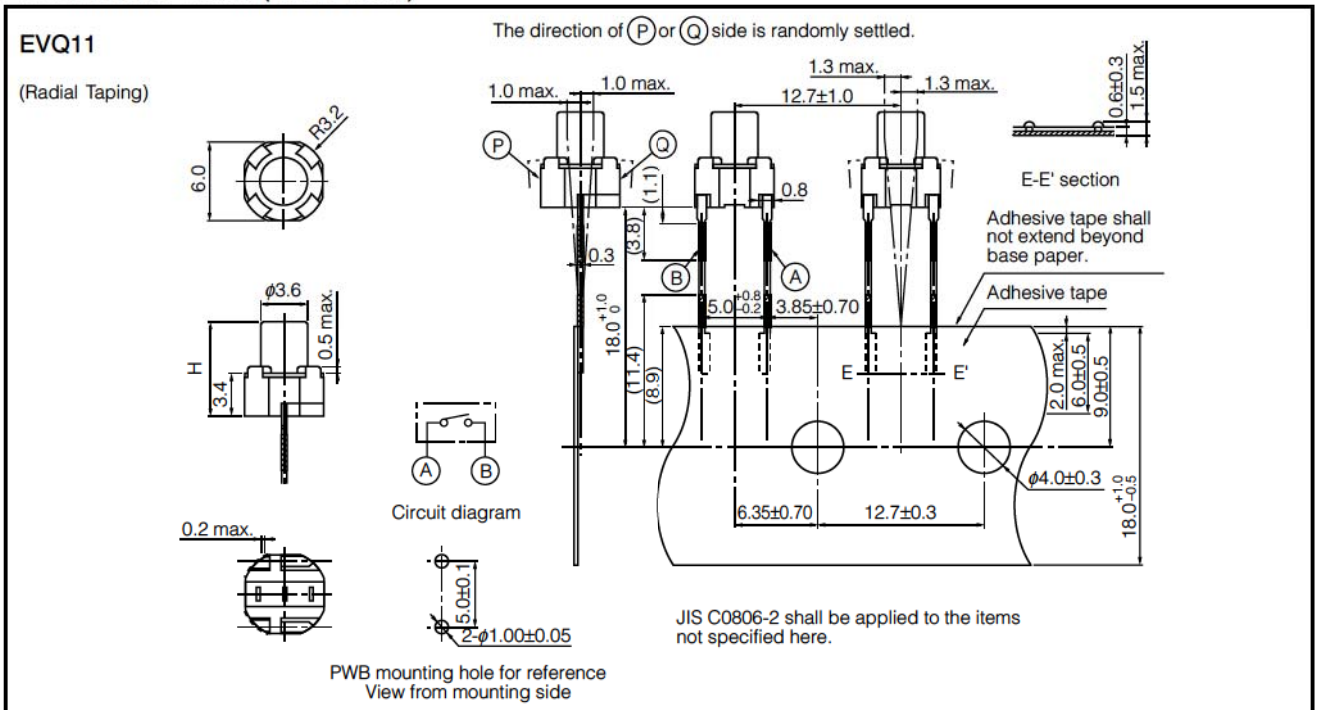

Part Numbers	Operating Force	H=Height	Push Plate Color	Operating Life
EVQ11A04M	1.0N	4.3 mm	White	100000 cycles
EVQ11A05R	1.0N	5.0 mm	Red	100000 cycles
EVQ11A07K	1.0N	7.0 mm	Black	100000 cycles
EVQ11A09K	1.0N	9.5 mm	Black	100000 cycles
EVQ11D04K	1.0N	4.3 mm	Black	1000000 cycles
EVQ11D05B	1.0N	5.0 mm	Blue	1000000 cycles
EVQ11D07K	1.0N	7.0 mm	Black	1000000 cycles
EVQ11D09K	1.0N	9.5 mm	Black	1000000 cycles
EVQ11G04M	1.3N	4.3 mm	White	100000 cycles
EVQ11G05R	1.3N	5.0 mm	Red	100000 cycles
EVQ11G07K	1.3N	7.0 mm	Black	100000 cycles
EVQ11G09K	1.3N	9.5 mm	Black	100000 cycles
EVQ11K04K	1.3N	4.3 mm	Black	1000000 cycles
EVQ11K05B	1.3N	5.0 mm	Blue	1000000 cycles
EVQ11K07K	1.3N	7.0 mm	Black	1000000 cycles
EVQ11K09K	1.3N	9.5 mm	Black	1000000 cycles
EVQ11L04M	1.6N	4.3 mm	White	100000 cycles
EVQ11L05R	1.6N	5.0 mm	Red	100000 cycles
EVQ11L07K	1.6N	7.0 mm	Black	100000 cycles
EVQ11L09K	1.6N	9.5 mm	Black	100000 cycles
EVQ11Y04K	1.6N	4.3 mm	Black	1000000 cycles
EVQ11Y05B	1.6N	5.0 mm	Blue	1000000 cycles
EVQ11Y07K	1.6N	7.0 mm	Black	1000000 cycles
EVQ11Y09K	1.6N	9.5 mm	Black	1000000 cycles
EVQ11U04M	2.6N	4.3 mm	White	50000 cycles
EVQ11U05R	2.6N	5.0 mm	Red	50000 cycles
EVQ11U07K	2.6N	7.0 mm	Black	50000 cycles
EVQ11U09K	2.6N	9.5 mm	Black	50000 cycles
EVQ11V04K	2.6N	4.3 mm	Black	100000 cycles
EVQ11V05B	2.6N	5.0 mm	Blue	100000 cycles
EVQ11V07K	2.6N	7.0 mm	Black	100000 cycles
EVQ11V09K	2.6N	9.5 mm	Black	100000 cycles

Design and specifications are each subject to change without notice. Ask factory for the current technical specifications before purchase and/or use.
Should a safety concern arise regarding this product, please be sure to contact us immediately.

6.0 mm×3.5 mm Light Touch Switches

Type: **EVQPE**

■ Features

- External dimensions : 6.0 mm×3.5 mm, Height 4.3 mm, 5.0 mm
- Wave soldering available

■ Recommended Applications

- Operating switches for other electronic equipment

■ Explanation of Part Numbers

1	2	3	4	5	6	7	8	9
E	V	Q	P	E				
Product Code			Type		Operating Force	Height		Push Plate Color

■ Product Chart

Operating Force \ Type	Bulk Type	Height
1.0 N±0.5 N	EVQPE4	H=4.3 mm H=5.0 mm
1.6 N±0.5 N	EVQPE5	
2.4 N±0.6 N	EVQPE6	

■ Specifications

Type		Snap action/Push-on type SPST	
Electrical	Circuit Diagram	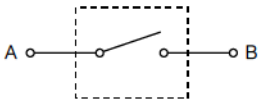	
	Rating	10 μA 2 Vdc to 50 mA 12 Vdc (Resistive load)	
	Contact Resistance	100 mΩ max.	
	Insulation Resistance	100 MΩ min. (at 100 Vdc)	
	Dielectric Withstanding Voltage	250 Vac for 1 minute	
	Bouncing	10 ms max. (ON, OFF)	
Mechanical	Operating Force	1.0 N±0.5N (Low force type) 1.6 N±0.5 N (Standard)	2.4 N±0.6 N
	Travel	0.25 mm $^{+0.20}_{-0.10}$ mm	
Endurance	Operating Life	50000 cycles min.	30000 cycles min.
Operating Temperature		−30 °C to +85 °C	
Storage Temperature		−40 °C to +85 °C (Bulk)	
Minimum Quantity/Packing Unit		1000 pcs. Polyethylene Bag (Bulk)	
Quantity/Carton		10000 pcs.	

Design and specifications are each subject to change without notice. Ask factory for the current technical specifications before purchase and/or use.
Should a safety concern arise regarding this product, please be sure to contact us immediately.

00 Oct. 2012

■ Dimensions in mm (not to scale)

EVQPE4
EVQPE5
EVQPE6

(Bulk)

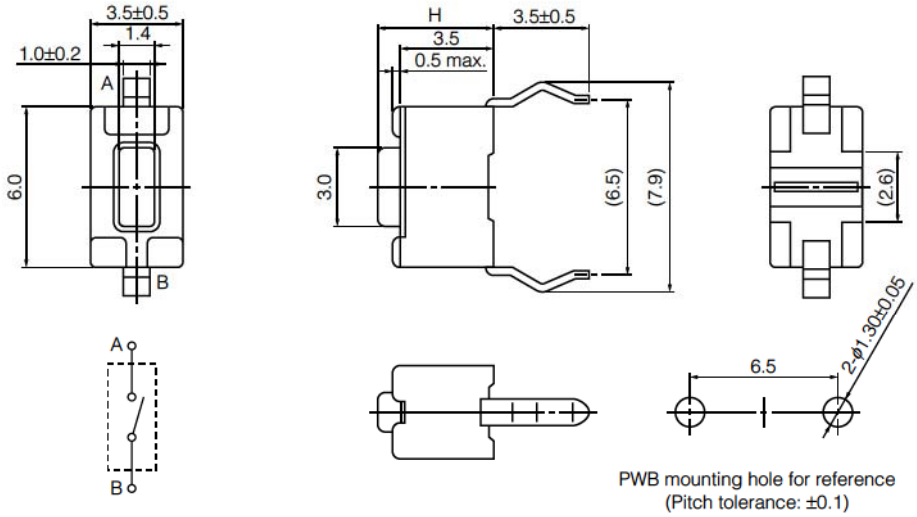

Circuit diagram

PWB mounting hole for reference
(Pitch tolerance: ±0.1)
View from mounting side

Part Numbers	Operating Force	H=Height	Push Plate Color	Operating Life
EVQPE404Q	1.0 N	4.3 mm	Grey	50000 cycles
EVQPE405Q	1.0 N	5.0 mm	Grey	50000 cycles
EVQPE504K	1.6 N	4.3 mm	Black	50000 cycles
EVQPE505K	1.6 N	5.0 mm	Black	50000 cycles
EVQPE604T	2.4 N	4.3 mm	Brown	30000 cycles
EVQPE605T	2.4 N	5.0 mm	Brown	30000 cycles

Design and specifications are each subject to change without notice. Ask factory for the current technical specifications before purchase and/or use.
Should a safety concern arise regarding this product, please be sure to contact us immediately.

6.0 mm×3.5 mm 2R Light Touch Switches

Type: **EVQPJ**

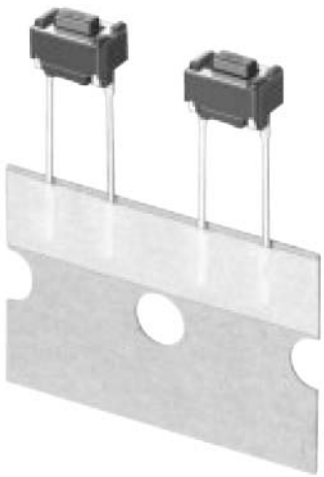

■ Features

- External dimensions : 6.0 mm×3.5 mm, Height 4.3 mm, 5.0 mm
- Wave soldering available

■ Recommended Applications

- Operating switches for other electronic equipment

■ Explanation of Part Numbers

1	2	3	4	5	6	7	8	9
E	V	Q	P	J				
Product Code			Type		Operating Force	Height		Push Plate Color

■ Product Chart

Operating Force \ Type	Radial Taping	Height
1.0 N±0.5 N	EVQPJG	H=4.3 mm H=5.0 mm
1.6 N±0.5 N	EVQPJH	
2.4 N±0.6 N	EVQPJJ	

■ Specifications

Type		Snap action/Push-on type SPST	
Electrical	Circuit Diagram	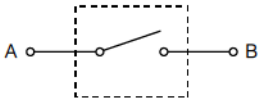	
	Rating	10 μA 2 Vdc to 50 mA 12 Vdc (Resistive load)	
	Contact Resistance	100 mΩ max.	
	Insulation Resistance	100 MΩ min. (at 100 Vdc)	
	Dielectric Withstanding Voltage	250 Vac for 1 minute	
	Bouncing	10 ms max. (ON, OFF)	
Mechanical	Operating Force	1.0 N±0.5N (Low force type) 1.6 N±0.5 N (Standard)	2.4 N±0.6 N
	Travel	0.25 mm $^{+0.20}_{-0.10}$ mm	
Endurance	Operating Life	50000 cycles min.	30000 cycles min.
Operating Temperature		−30 °C to +85 °C	
Storage Temperature		−40 °C to +85 °C (Bulk) −20 °C to +40 °C (Taping)	
Minimum Quantity/Packing Unit		2000 pcs. Radial Taping (Reel Pack)	
Quantity/Carton		20000 pcs.	

Design and specifications are each subject to change without notice. Ask factory for the current technical specifications before purchase and/or use.
Should a safety concern arise regarding this product, please be sure to contact us immediately.

00 Oct. 2012

■ Dimensions in mm (not to scale)

EVQPJG
EVQPJH
EVQPJJ

(Radial Taping)

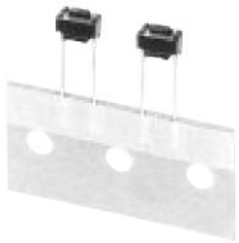

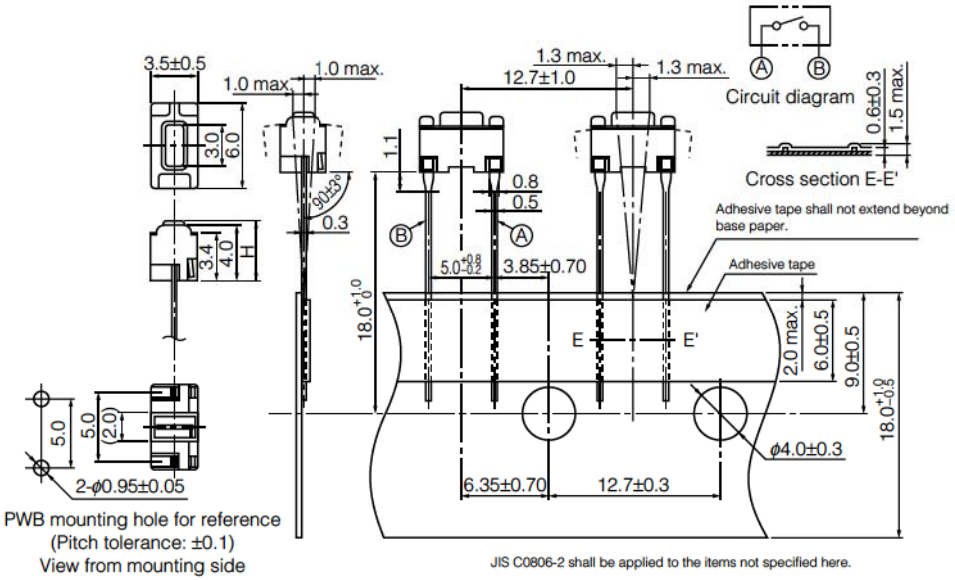

Part Numbers	Operating Force	H=Height	Push Plate Color	Operating Life
EVQPJG04Q	1.0 N	4.3 mm	Grey	50000 cycles
EVQPJG05Q	1.0 N	5.0 mm	Grey	50000 cycles
EVQPJH04K	1.6 N	4.3 mm	Black	50000 cycles
EVQPJH05K	1.6 N	5.0 mm	Black	50000 cycles
EVQPJJ04T	2.4 N	4.3 mm	Brown	30000 cycles
EVQPJJ05T	2.4 N	5.0 mm	Brown	30000 cycles

Design and specifications are each subject to change without notice. Ask factory for the current technical specifications before purchase and/or use.
Should a safety concern arise regarding this product, please be sure to contact us immediately.

Over Travel Light Touch Switches

Type: **EVQP0**

■ Features

- External dimensions : 6.2 mm×6.2 mm, Height 7.45 mm
- Comfortable for long-time operation due to over-travel
- Excellent light-touch operational feel

■ Recommended Applications

- Operating switches for other electronic equipment
- Operation switches for PC mouse

■ Explanation of Part Numbers

1	2	3	4	5	6	7	8	9
E	V	Q	P	0		0	7	K

Type

6th	Operating Force
E	0.74 N
D	1.30 N

7th & 8th	Mounting Height
07	7.45 mm

9th	Push Plate Color
K	Black

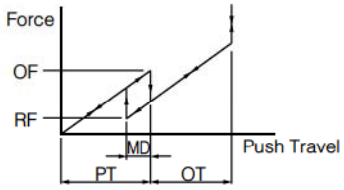

■ Specifications

Type		Snap action / Push-on type SPST	
Electrical	Rating	10 µA 2 Vdc to 50 mA 30 Vdc (Resistive load)	
	Contact Resistance	100 mΩ max. (1 Ω max. after life test)	
	Insulation Resistance	100 MΩ min. (at 100 Vdc)	
	Dielectric Withstanding Voltage	600 Vac for 1 minute	
	Bouncing	3 ms max. (ON), 8 ms max. (OFF)	
Mechanical	Operating Force	EVQP0E : 0.74 N max.	EVQP0D : 1.3 N max.
	Returning Force	0.1 N min.	
	Pre-travel	0.5 mm max.	
	Movement Differential (MD)	0.12 mm max.	
	Over Travel	0.2 mm max.	
Endurance	Operating Life	EVQP0E : 5000000 cycles min.	EVQP0D : 1000000 cycles min.
Operating Temperature		–20 °C to +70 °C	
Storage Temperature		–45 °C to +85 °C	
Minimum Quantity/Packing Unit		500 pcs. Polyethylene Bag (Bulk)	
Quantity/Carton		10000 pcs.	

Design and specifications are each subject to change without notice. Ask factory for the current technical specifications before purchase and/or use.
Should a safety concern arise regarding this product, please be sure to contact us immediately.

00 Oct. 2012

■ Dimensions in mm (not to scale)

EVQP0

(Bulk)

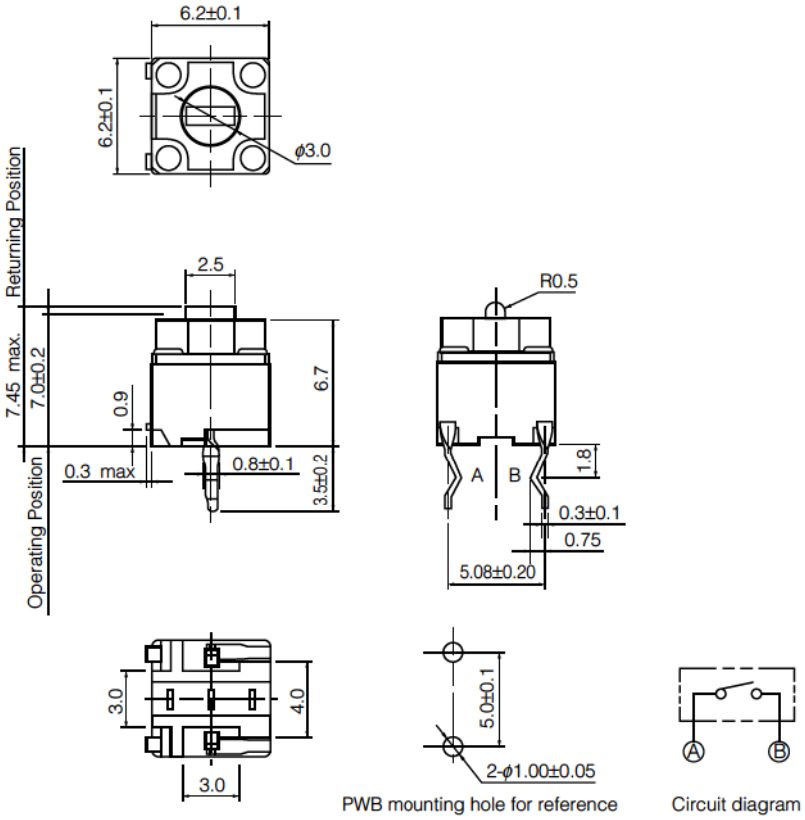

Part Numbers	Operating Force	Height	Push Plate Color	Operating Life
EVQP0E07K	0.74 N	7.45 mm	Black	5000000 cycles
EVQP0D07K	1.30 N	7.45 mm	Black	1000000 cycles

Design and specifications are each subject to change without notice. Ask factory for the current technical specifications before purchase and/or use.
Should a safety concern arise regarding this product, please be sure to contact us immediately.

4 mm Square Double-action SMD Light Touch Switches

Type: **EVPAH**

■ Features

- External dimensions : 4.0 mm×4.1 mm, Height 0.59 mm
- Long operation life
- Wide selection of double action operating variations

■ Recommended Applications

- Camera function (Digital still cameras, Camcorders, Mobile phones, etc.) for shutter switches.

■ Explanation of Part Numbers

1	2	3	4	5	6	7	8	9
E	V	P	A	H				
Product Code			Type				Height	

6th	Operating Force 1st	Operating Force 2nd
A	0.8 N	1.6 N
B	0.9 N	2.0 N
C	1.0 N	2.6 N

7th	Terminal Type	Positioning Boss
G	J-bent	Without

■ Specifications

Type		Snap action/Push-on type SPDT
Electrical	Rating	10 μA 2 Vdc to 20 mA 15 Vdc (Resistive load)
	Contact Resistance	500 mΩ max.
	Insulation Resistance	100 MΩ min. (at 100 Vdc)
	Dielectric Withstanding Voltage	250 Vac for 1 minute
	Bouncing	3 ms max. (ON), 20 ms max. (OFF)
Mechanical	Operating Force	1st : 0.8 N, 0.9 N, 1.0 N 2nd : 1.6 N, 2.0 N, 2.6 N
	Travel	1st: 0.15 mm 2nd: 0.3 mm
Endurance	Operating Life	1.6 N : 100000 cycles min. 2.0 N : 100000 cycles min. 2.6 N : 30000 cycles min.
Operating Temperature		−20 °C to +70 °C
Storage Temperature		−40 °C to +85 °C (Bulk) −20 °C to +60 °C (Taping)
Minimum Quantity/Packing Unit		8000 pcs. Embossed Taping (Reel Pack)
Quantity/Carton		40000 pcs.

Design and specifications are each subject to change without notice. Ask factory for the current technical specifications before purchase and/or use.
Should a safety concern arise regarding this product, please be sure to contact us immediately.

00 Oct. 2012

■ Dimensions in mm (not to scale)

EVPAH

With J-bent terminals

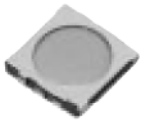

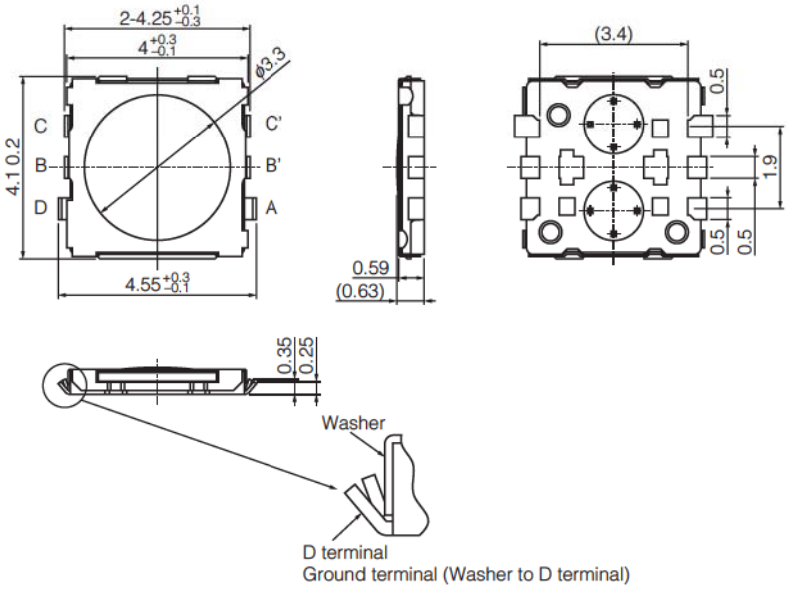

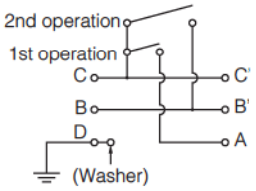

Circuit Diagram

✻ C or/and C' shall be used as common/ground terminal.

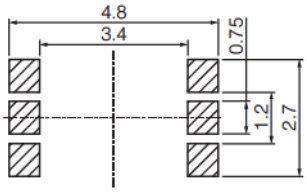

PWB land pattern for reference
(View from mounting side)

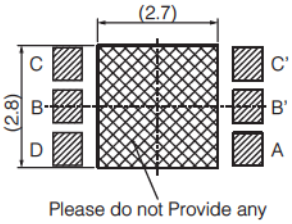

Please do not Provide any
Land pattern in this area.

Part Numbers	Boss	Ground Terminal	Operating Force		Height	Operating Life
			1 th	2 th		
EVPAHAG6A	Without	With	0.8 N	1.6 N	0.59	100000 cycles
EVPAHBG6A	Without	With	0.9 N	2.0 N	0.59	100000 cycles
EVPAHCG6A	Without	With	1.0 N	2.6 N	0.59	30000 cycles

Design and specifications are each subject to change without notice. Ask factory for the current technical specifications before purchase and/or use.
Should a safety concern arise regarding this product, please be sure to contact us immediately.

■ Recommended Reflow Soldering Conditions

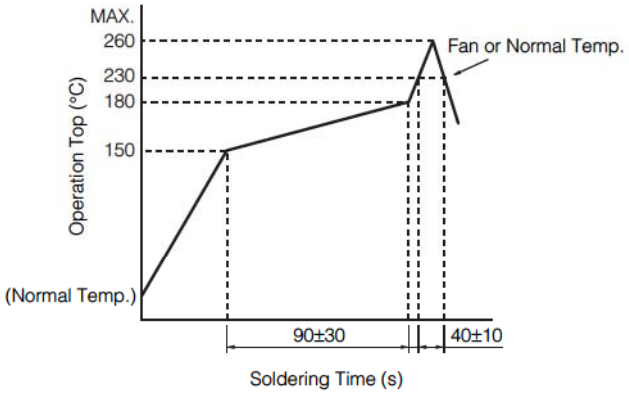

● Embossed Carrier Taping

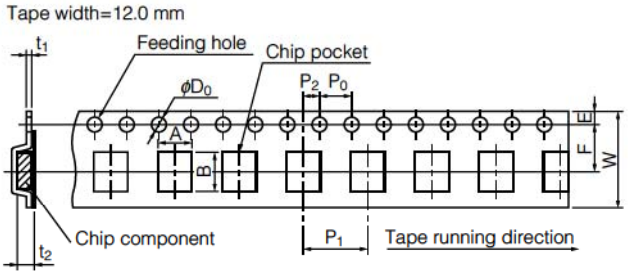

Unit: mm

Part No.	Height	A	B	W	F	E	P_1	P_2	P_0	D_0 Dia.	t_1	t_2
EVPAH	0.59	4.36±0.2	4.4±0.2	$12.0^{+0.3}_{-0.1}$	5.5±0.1	1.75±0.1	8.0±0.1	2.0±0.1	4.0±0.1	$1.5^{+0.1}_{-0}$	0.3±0.05	$1.25^{+0.2}_{-0.1}$

● Standard Reel Dimensions in mm (not to scale)

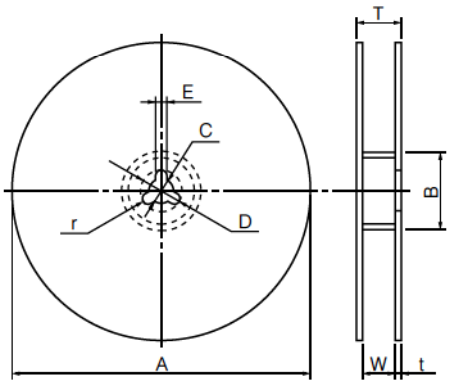

Item	A	B	C	D	E
Rate (mm)	φ380.0±2.0	φ80.0±1.0	φ13.0±0.5	φ21.0±1.0	2.0±0.5

Item	W	T	t	r
Rate (mm)	13.5±1.0	17.5±1.0	1.0 to 3.0	1.0±0.5

■ Recommended Shape of Test Pole

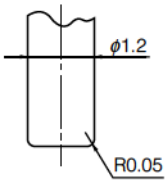

■ Recommended Operating Conditions

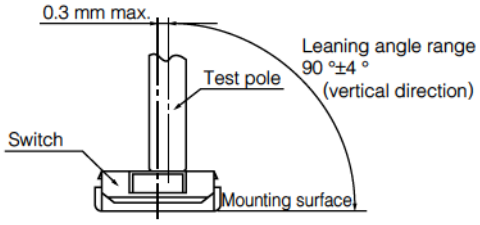

Design and specifications are each subject to change without notice. Ask factory for the current technical specifications before purchase and/or use.
Should a safety concern arise regarding this product, please be sure to contact us immediately.

6 mm Square Thin Type Double-action SMD Light Touch Switches

Type: **EVQPR/EVQQ0/EVQ3PR**

■ Features

- External dimensions : 6.0 mm×6.0 mm,
  Height : 0.9 mm (Without push plate)
  0.95 mm (With push plate)
- Wide selection of double action operating variations
  With push plate : 1st 0.7 N, 2nd 2.6 N
  Without push plate : 1st 1.0 N, 2nd 2.6 N
- Wide selection of double action operating variations

■ Recommended Applications

- Camera function
  (Digital still cameras, Camcorders, Mobile phones, etc.)
- Operating switches for menu scrolling and confirmation for portable equipment.

■ Explanation of Part Numbers

1	2	3	4	5	6	7	8	9
E	V	Q						

4th, 5th, 6th	Boss	Ground Terminal
PRB, Q04	Without	Without
PR7, 3PR	With	Without
PR5, PRD	Without	With
PR9, PRH	With	With

7th, 8th, 9th	Push Plate
A10	With
A09	Without

■ Specifications

Type		Snap action/Push-on type SPDT	
Push Plate type		With Push Plate	Without Push Plate
Electrical	Rating	10 μA 2 Vdc to 20 mA 15 Vdc (Resistive load)	
	Contact Resistance	100 mΩ max.	
	Insulation Resistance	50 MΩ min.	
	Dielectric Withstanding Voltage	100 Vac for 1 minute	
	Bouncing	3 ms max. (ON) 20 ms max. (OFF)	
Mechanical	Operating Force	1st : 0.7 N	1st : 1.0 N
		2nd : 2.6 N	2nd : 2.6 N
	Travel	1st: 0.4 mm 2nd: 0.6 mm	
Endurance	Operating Life	30000 cycles min.	
Operating Temperature		–20 °C to +70 °C	
Storage Temperature		–40 °C to +85 °C (Bulk) –20 °C to +60 °C (Taping)	
Minimum Quantity/Packing Unit		5000 pcs. Embossed Taping (Reel Pack)	
Quantity/Carton		25000 pcs.	

Design and specifications are each subject to change without notice. Ask factory for the current technical specifications before purchase and/or use.
Should a safety concern arise regarding this product, please be sure to contact us immediately.

00 Oct. 2012

■ Dimensions in mm (not to scale)

No. 1

With Push Plate

EVQQ0
EVQPR

(Mounting base with Boss)
(With ground terminal)

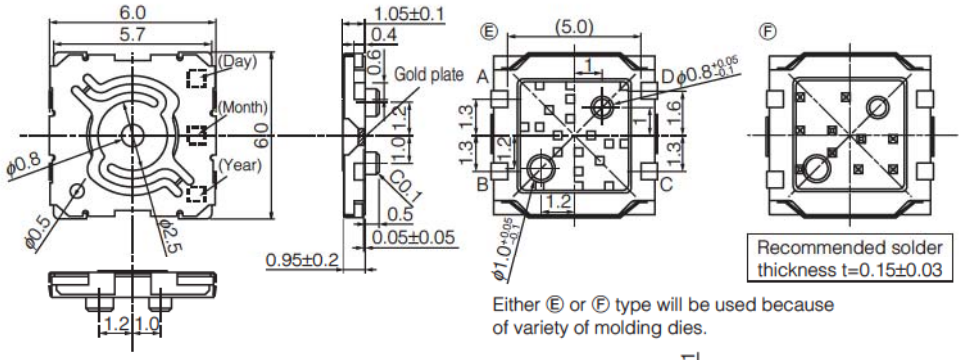

Either Ⓔ or Ⓕ type will be used because of variety of molding dies.

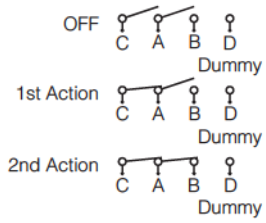

Circuit diagram

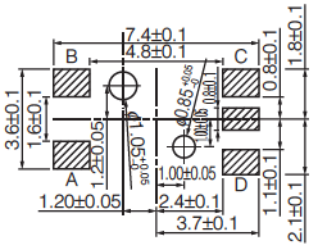

PWB land pattern for reference
(View from mounting side)

Part Numbers	Ground Terminal	Boss	Operating Force	Height	Operating Life
EVQQ04A10	Without	Without	1st/0.7 N, 2nd/2.6 N	0.95 mm	30000 cycles
EVQPR7A10	Without	With	1st/0.7 N, 2nd/2.6 N	0.95 mm	30000 cycles
EVQPR5A10	With	Without	1st/0.7 N, 2nd/2.6 N	0.95 mm	30000 cycles
EVQPR9A10	With	With	1st/0.7 N, 2nd/2.6 N	0.95 mm	30000 cycles

No. 2

Without Push Plate

EVQPR
EVQ3PR

(Mounting base with Boss)
(With ground terminal)

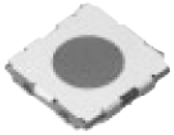

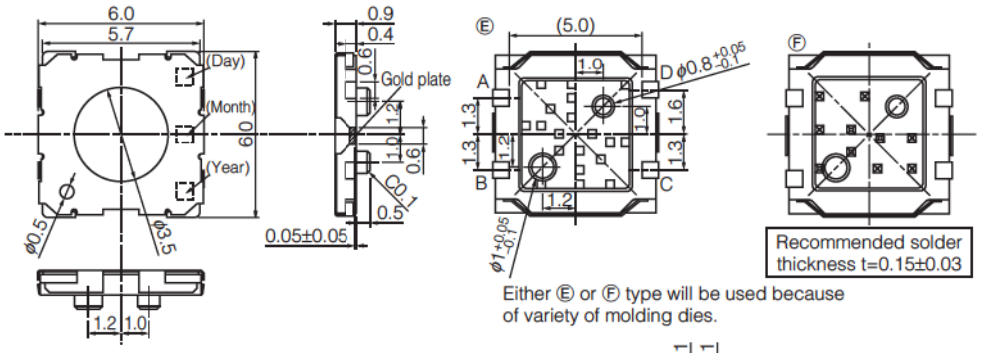

Either Ⓔ or Ⓕ type will be used because of variety of molding dies.

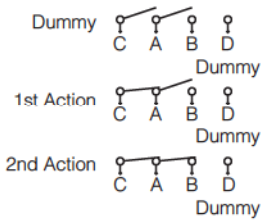

Circuit diagram

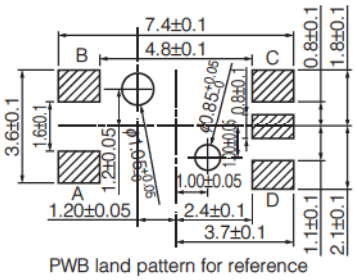

PWB land pattern for reference
(View from mounting side)

Part Numbers	Ground Terminal	Boss	Operating Force	Height	Operating Life
EVQPRBA09	Without	Without	1st/1.0 N, 2nd/2.6 N	0.9 mm	30000 cycles
EVQ3PRA09	Without	With	1st/1.0 N, 2nd/2.6 N	0.9 mm	30000 cycles
EVQPRDA09	With	Without	1st/1.0 N, 2nd/2.6 N	0.9 mm	30000 cycles
EVQPRHA09	With	With	1st/1.0 N, 2nd/2.6 N	0.9 mm	30000 cycles

Design and specifications are each subject to change without notice. Ask factory for the current technical specifications before purchase and/or use.
Should a safety concern arise regarding this product, please be sure to contact us immediately.

■ Recommended Reflow Soldering Conditions

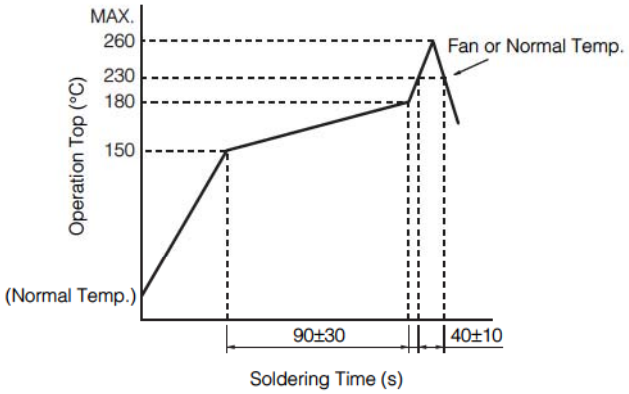

● Embossed Carrier Taping

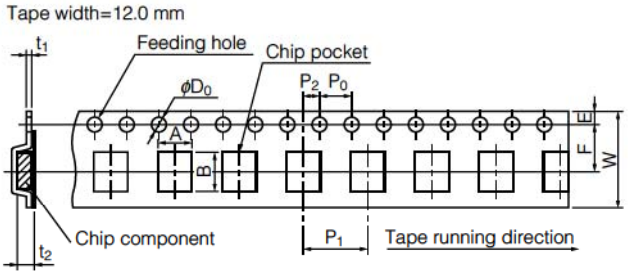

Unit: mm

Part No.	Height	A	B	W	F	E	P_1	P_2	P_0	D_0 Dia.	t_1	t_2
EVQPR/Q0/3PR	0.9, 0.95	6.3±0.3	6.3±0.3	12.0±0.3	5.50±0.15	1.75±0.15	8.00±0.15	2.00±0.15	4.00±0.15	$1.5^{+0.1}_{-0}$	0.30±0.05	$1.7^{+0.2}_{-0.1}$

● Standard Reel Dimensions in mm (not to scale)

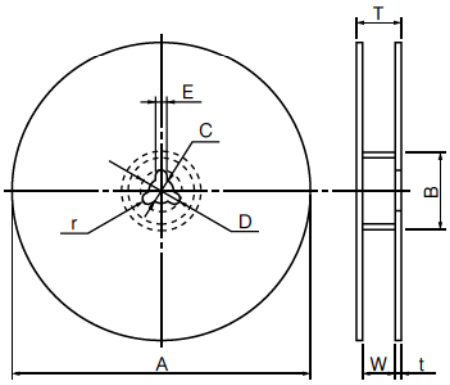

Item	A	B	C	D	E
Rate (mm)	φ380.0±2.0	φ80.0±1.0	φ13.0±0.2	φ21.0±0.8	2.0±0.5

Item	W	T	t	r
Rate (mm)	13.5±1.0	17.5±1.0	1.0 to 3.0	1.0±0.5

■ Recommended Shape of Test Pole

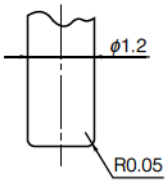

■ Recommended Operating Conditions

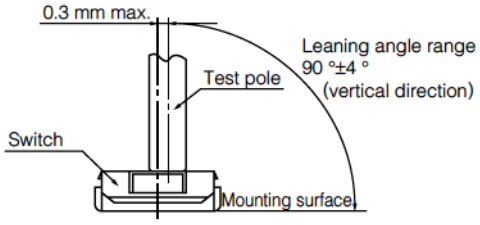

Design and specifications are each subject to change without notice. Ask factory for the current technical specifications before purchase and/or use.
Should a safety concern arise regarding this product, please be sure to contact us immediately.

4.7 mm×3.5 mm Double-action Side-operational SMD Light Touch Switches

Type: **EVPAJ**

■ Features

- External dimensions : 4.7 mm×3.5 mm (Without push plate), Height : 1.2 mm
- With ground terminal

■ Recommended Applications

- Camera function
  (Digital still cameras, Camcorders, Mobile phones, etc.)
- Operating switches for menu scrolling and confirmation for portable equipment.

■ Explanation of Part Numbers

1	2	3	4	5	6	7	8	9
E	V	P	A	J				
Product code			Type			Height		

■ Specifications

Type		Snap action/Push-on type SPDT
	Rating	10 μA 2 Vdc to 20 mA 15 Vdc (Resistive load)
	Contact Resistance	500 mΩ max.
	Insulation Resistance	100 MΩ min. (at 100 Vdc)
	Dielectric Withstanding Voltage	250 Vac for 1 minute
	Bouncing	3 ms max. (ON) 20 ms max. (OFF)
Mechanical	Operating Force (1st Action)	1.6 N
	Operating Force (2nd Action)	2.6 N
	Travel (1st Action)	0.15 mm
	Travel (2nd Action)	0.4 mm
	Push Strength	30 N for 15 seconds
Endurance	Operating Life	100000 cycles min.
Operating Temperature		–20 °C to +70 °C
Storage Temperature		–40 °C to +85 °C (Bulk) –20 °C to +60 °C (Taping)
Minimum Quantity/Packing Unit		5000 pcs. Embossed Taping (Reel Pack)
Quantity/Carton		25000 pcs.

Design and specifications are each subject to change without notice. Ask factory for the current technical specifications before purchase and/or use.
Should a safety concern arise regarding this product, please be sure to contact us immediately.

■ Dimensions in mm (not to scale)

EVPAJ

(Embossed Taping)
With Ground Terminal

Part Nambers :
EVPAJAC1A

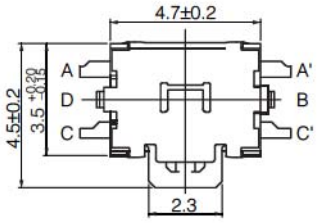

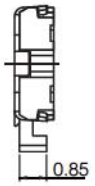

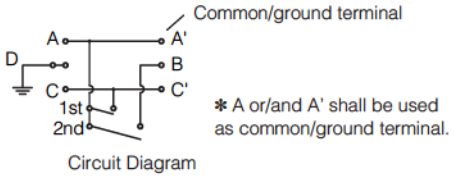

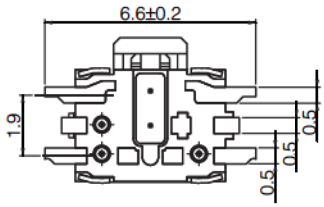

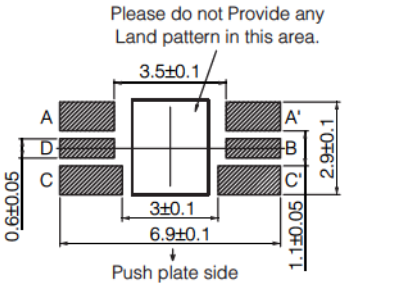

PWB land pattern for reference(View from mounting side)

EVPAJ

L-shape

Part Nambers :
EVPAJAE1A

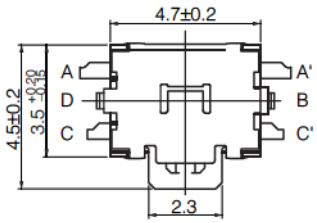

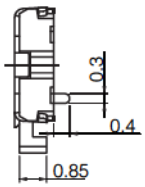

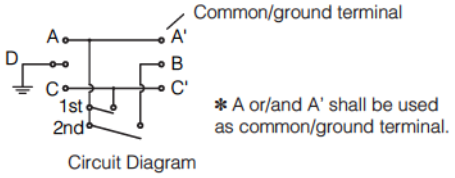

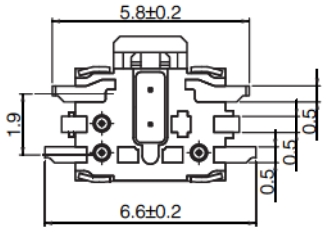

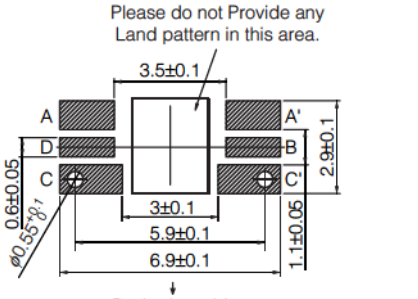

PWB land pattern for reference(View from mounting side)

Design and specifications are each subject to change without notice. Ask factory for the current technical specifications before purchase and/or use.
Should a safety concern arise regarding this product, please be sure to contact us immediately.

■ Recommended Reflow Soldering Conditions

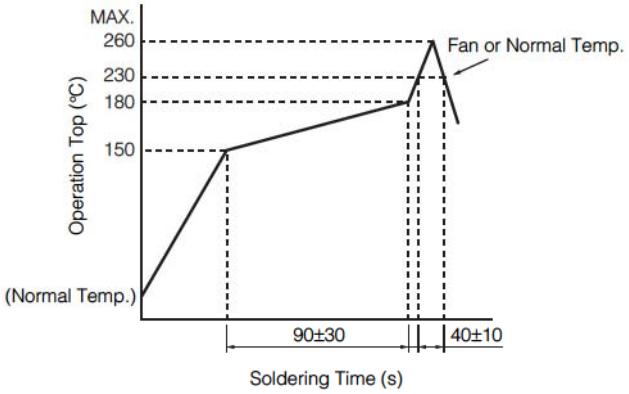

● Embossed Carrier Taping

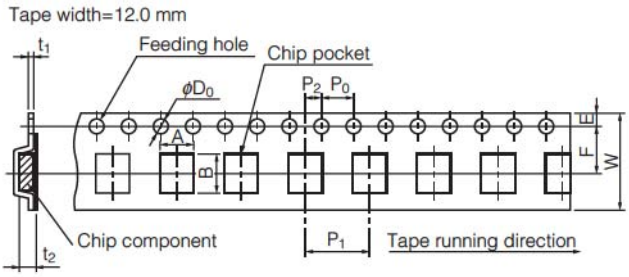

Unit: mm

Part No.	Height	A	B	W	F	E	P_1	P_2	P_0	D_0 Dia.	t_1	t_2
EVPAJ	1.2	6.8±0.2	4.9±0.2	$12.0^{+0.3}_{-0.1}$	5.78±0.1	1.75±0.1	8.0±0.1	2.0±0.1	4.0±0.1	$1.5^{+0.1}_{-0}$	0.3±0.05	$1.95^{+0.3}_{-0}$

● Standard Reel Dimensions in mm (not to scale)

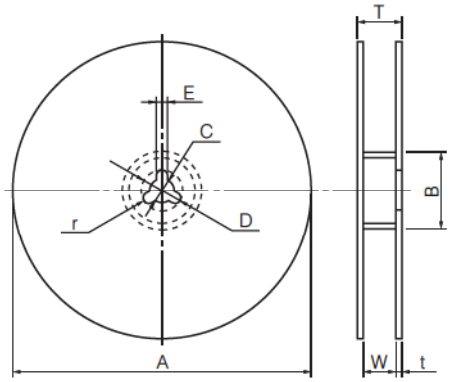

Item	A	B	C	D	E
Rate (mm)	φ380.0±2.0	φ80.0±1.0	φ13.0±0.5	φ21.0±1.0	2.0±0.5

Item	W	T	t	r
Rate (mm)	13.5±1.0	17.5±1.0	–	–

Design and specifications are each subject to change without notice. Ask factory for the current technical specifications before purchase and/or use.
Should a safety concern arise regarding this product, please be sure to contact us immediately.

6.2 mm×3.7 mm Double-action Side-operational Edge Mount / SMD Light Touch Switches

Type: **EVQQ0**

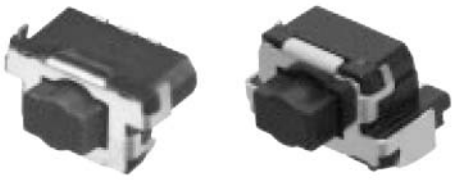

■ Features

- External dimensions : 6.2 mm×3.75 mm (Excluding the push plate), Height : 3.5 mm (EVQQ0C Type : Printed circuit board being as low as 1.35 mm)
- Good operability due to long stroke : 1st 0.4 mm, 2nd 0.5 mm
- Improved soldering strength in the operating direction when mounted on PC board edge

■ Recommended Applications

- Camera function
  (Digital still cameras, Camcorders, Mobile phones, etc.)
- Operating switches for menu scrolling and confirmation for portable equipment.

■ Explanation of Part Numbers

1	2	3	4	5	6	7	8	9
E	V	Q	Q	0				
Product code			Type			Height		

■ Specifications

Type		Snap action/Push-on type SPDT
Electrical	Circuit Diagram	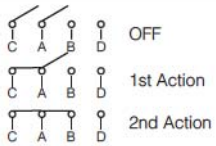
	Rating	10 μA 2 Vdc to 20 mA 15 Vdc (Resistive load)
	Contact Resistance	500 mΩ max.
	Insulation Resistance	100 MΩ min. (at 100 Vdc)
	Dielectric Withstanding Voltage	100 Vac for 1 minute
	Bouncing	5 ms max. (ON) 20 ms max. (OFF)
Mechanical	Operating Force (1st Action)	1.0 N
	Operating Force (2nd Action)	2.6 N
	Travel (1st Action)	0.4 mm
	Travel (2nd Action)	0.5 mm
	Push Strength	30 N for 1 minute
Endurance	Operating Life	1st Action with click : 200000 cycles min.
Operating Temperature		−20 °C to +70 °C
Storage Temperature		−40 °C to +85 °C (Bulk) −20 °C to +60 °C (Taping)
Minimum Quantity/Packing Unit		2500 pcs. Embossed Taping (Reel Pack)
Quantity/Carton		12500 pcs.

Design and specifications are each subject to change without notice. Ask factory for the current technical specifications before purchase and/or use.
Should a safety concern arise regarding this product, please be sure to contact us immediately.

00 Oct. 2012

■ Dimensions in mm (not to scale)

No. 1

EVQQ0C0

(Embossed Taping)

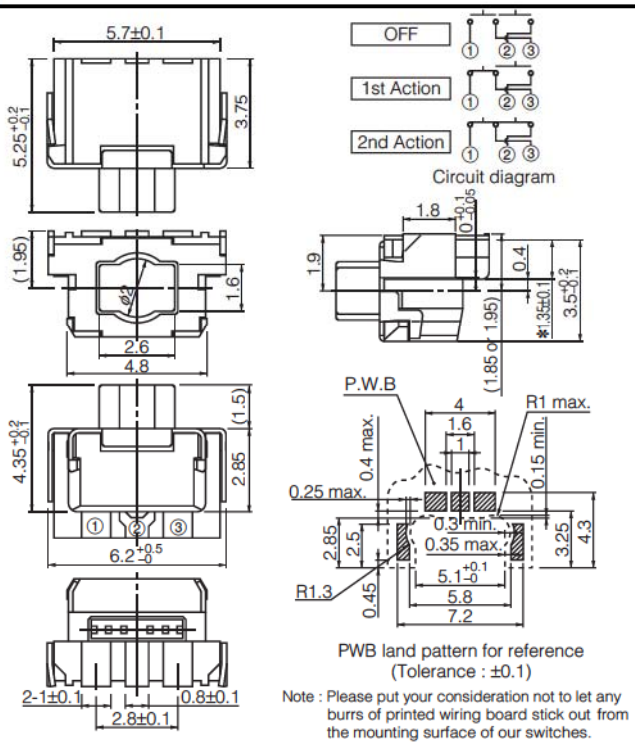

Note : Please put your consideration not to let any burrs of printed wiring board stick out from the mounting surface of our switches.

∗ Height from surface of PCB : 1.35 mm

Part Numbers	Operating Force	Height	Operating Life
EVQQ0C03K	1st Action/1.0 N (With click) 2nd Action/2.6 N	3.5 mm	200000 cycles

No. 2

EVQQ0G0

(Embossed Taping)

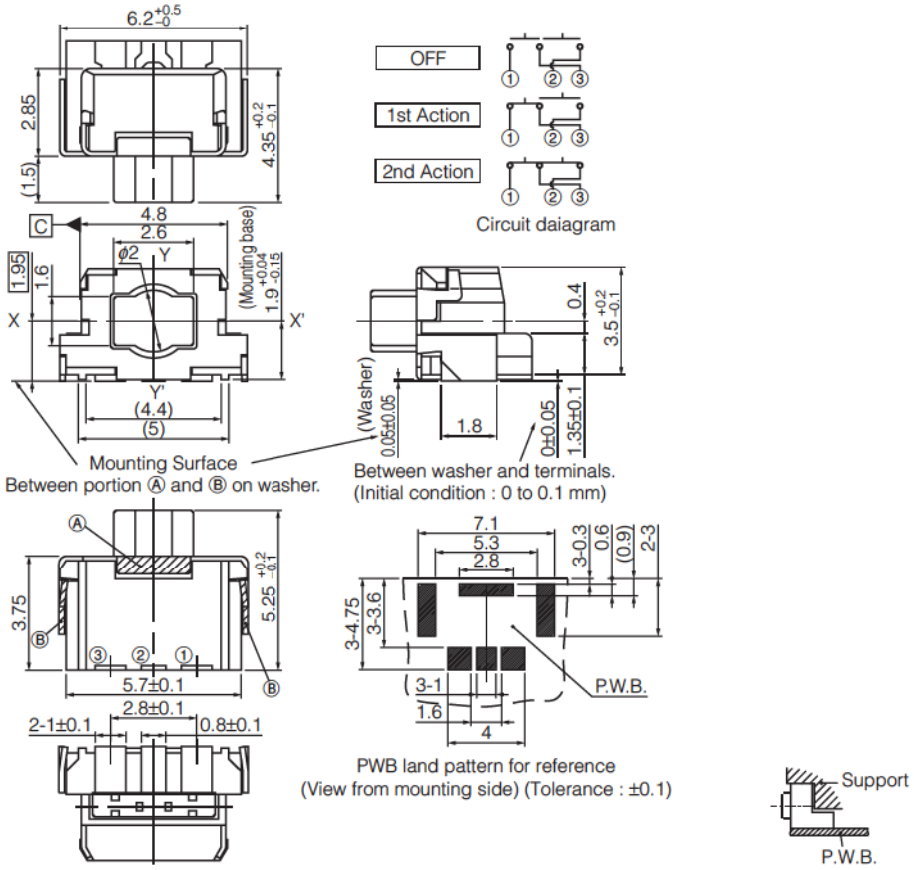

Part Numbers	Operating Force	Height	Operating Life
EVQQ0G03K	1st Action/1.0 N (With click) 2nd Action/2.6 N	3.5 mm	200000 cycles

Design and specifications are each subject to change without notice. Ask factory for the current technical specifications before purchase and/or use.
Should a safety concern arise regarding this product, please be sure to contact us immediately.

■ Recommended Reflow Soldering Conditions

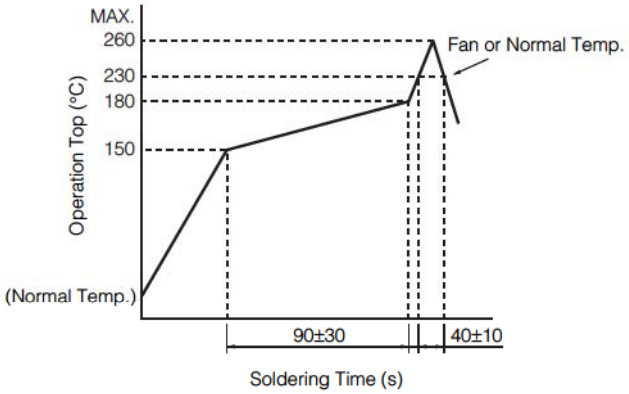

● Embossed Carrier Taping

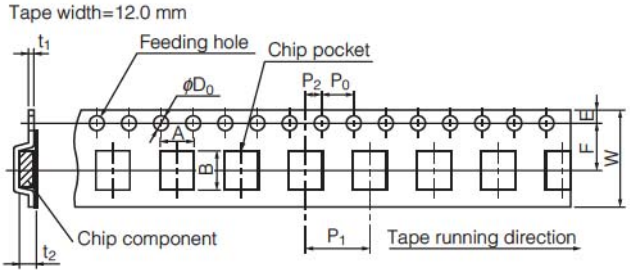

Unit: mm

Part No.	Height	A	B	W	F	E	P_1	P_2	P_0	D_0 Dia.	t_1	t_2
EVQQ0C	3.5	6.6±0.2	5.7±0.2	12.0±0.3	5.5±0.1	1.75±0.10	8.0±0.1	2.0±0.1	4.0±0.1	$1.5^{+0.1}_{-0}$	0.4±0.1	3.8±0.2
EVQQ0G			5.8±0.2									3.7±0.2

● Standard Reel Dimensions in mm (not to scale)

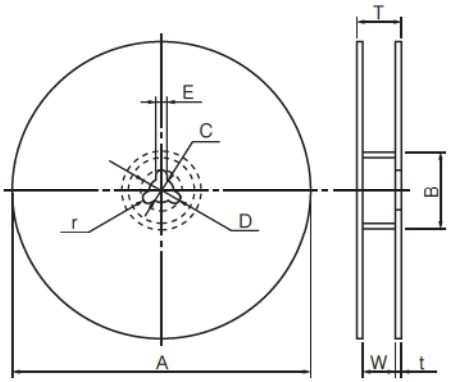

Item	A	B	C	D	E
Rate (mm)	φ380.0±2.0	φ80.0±1.0	φ13.0±0.5	φ21.0±1.0	2.0±0.5

Item	W	T	t	r
Rate (mm)	13.5±1.0	17.5±1.0	1.0 to 3.0	1.0±0.5

Design and specifications are each subject to change without notice. Ask factory for the current technical specifications before purchase and/or use.
Should a safety concern arise regarding this product, please be sure to contact us immediately.

6 mm Square Long Travel SMD Light Touch Switches

Type: **EVQP0/EVQP1/EVQ9P**

■ Features

- External dimensions : 6.0 mm×6.1 mm, Height 5.0 mm (Including the push plate)
- Steady and low contact resistance (100 mΩ max.)
- Excellent solderability (J-bent-type terminals)

■ Recommended Applications

- Operating switches for car electronic equipment.
- Input on operating switches for telephones, electronic musical instruments, etc.

■ Explanation of Part Numbers

1	2	3	4	5	6	7	8	9
E	V	Q				0	5	M

4th, 5th, 6th	Operating Force	Travel
P1K	2.2 N	1.0 mm
P1Y	2.5 N	
P19	1.6 N	1.3 mm
P1F	2.0 N	
P1D	2.5 N	
P04	3.0 N	
9P1	3.5 N	

7th & 8th	Height from Bottom to Knob Top
05	5.0 mm

9th	Push Plate Color
M	Natural

■ Specifications

Type		Snap action/Push-on type SPST	
Electrical	Rating	10 μA 2 Vdc to 50 mA 12 Vdc (Resistive load)	
	Contact Resistance	100 mΩ max.	
	Insulation Resistance	100 MΩ min. (at 100 Vdc)	
	Dielectric Withstanding Voltage	250 Vac for 1 minute	
	Bouncing	10 ms max. (ON, OFF)	
Mechanical	Operating Force	1.6 N±0.5 N, 2.0 N±0.6 N 2.5 N±0.6 N 3.0 N±0.8 N 3.5 N±1.0 N	2.2 N±0.6 N 2.5 N±0.6 N
	Travel	1.3 mm±0.2 mm	1.0 mm±0.2 mm
Endurance	Operating Life	3.5 N type: 30000 cycles min. 1.6 N, 2.0 N, 2.2 N, 2.5 N, 3.0 N types: 100000 cycles min.	
Operating Temperature		−40 °C to +85 °C	
Storage Temperature		−40 °C to +85 °C (Bulk) −20 °C to +60 °C (Taping)	
Minimum Quantity/Packing Unit		2000 pcs. Embossed Taping (Reel Pack)	
Quantity/Carton		10000 pcs.	

Design and specifications are each subject to change without notice. Ask factory for the current technical specifications before purchase and/or use.
Should a safety concern arise regarding this product, please be sure to contact us immediately.

00 Oct. 2012

■ Dimensions in mm (not to scale)

EVQP0
EVQP1
EVQ9P

(Embossed Taping)

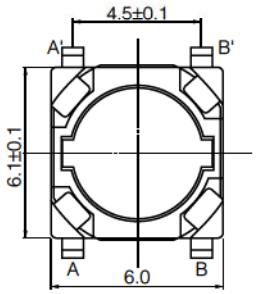

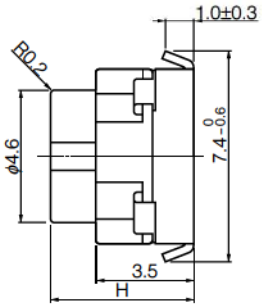

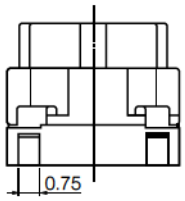

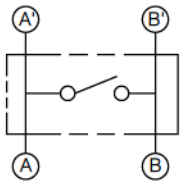

Circuit diagram

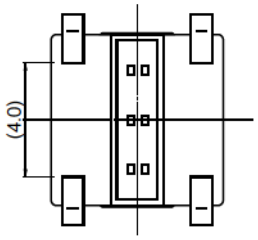

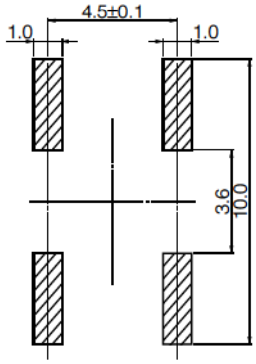

PWB land pattern for reference

Part Numbers	Operating Force	Travel	H=Height	Push Plate Color	Operating Life
EVQP1K05M	2.2 N	1.0 mm	5.0 mm	Natural	100000 cycles
EVQP1Y05M	2.5 N	1.0 mm	5.0 mm	Natural	100000 cycles
EVQP1905M	1.6 N	1.3 mm	5.0 mm	Natural	100000 cycles
EVQP1F05M	2.0 N	1.3 mm	5.0 mm	Natural	100000 cycles
EVQP1D05M	2.5 N	1.3 mm	5.0 mm	Natural	100000 cycles
EVQP0405M	3.0 N	1.3 mm	5.0 mm	Natural	100000 cycles
EVQ9P105M	3.5 N	1.3 mm	5.0 mm	Natural	30000 cycles

Design and specifications are each subject to change without notice. Ask factory for the current technical specifications before purchase and/or use.
Should a safety concern arise regarding this product, please be sure to contact us immediately.

■Recommended Reflow Soldering Conditions

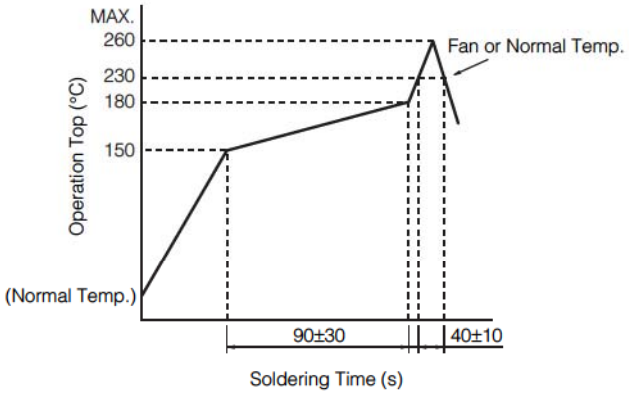

● Embossed Carrier Taping

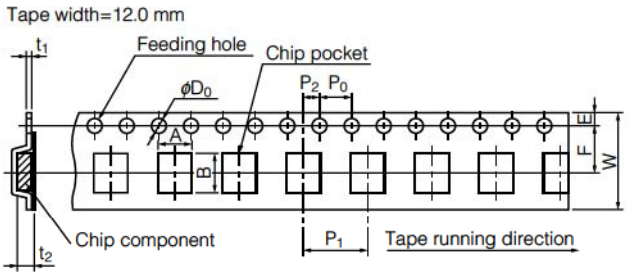

Unit: mm

Part No.	Height	A	B	W	F	E	P_1	P_2	P_0	D_0 Dia.	t_1	t_2
EVQP0 EVQP1 EVQ9P	5.0	6.4±0.2	7.9±0.2	12.0±0.3	5.5±0.1	1.75±0.10	8.0±0.1	2.0±0.1	4.0±0.1	$1.5^{+0.1}_{-0}$	0.4±0.1	5.25±0.20

● Standard Reel Dimensions in mm (not to scale)

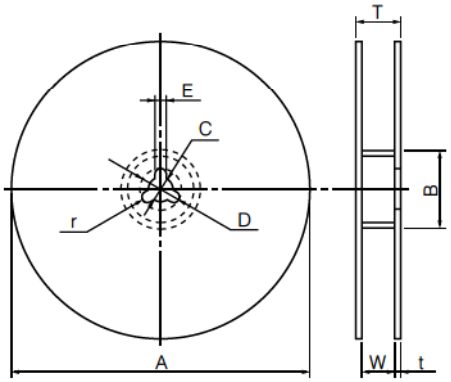

Item	A	B	C	D	E
Rate (mm)	φ370.0±2.0	φ50.0 min.	φ13.0±0.5	φ21.0±1.0	2.0±0.5

Item	W	T	t	r
Rate (mm)	14.0±1.5	—	1.0 to 3.0	1.0±0.5

Design and specifications are each subject to change without notice. Ask factory for the current technical specifications before purchase and/or use.
Should a safety concern arise regarding this product, please be sure to contact us immediately.

NEW

6 mm Square Long Travel 2 terminals SMD Light Touch Switches

Type: **EVPAS**

■ Features

- External dimensions : 6.0 mm×6.1 mm, Height 5.0 mm (Including the push plate)
- Steady and low contact resistance (100 mΩ max.)
- Excellent solderability (J-bent-type terminals)

■ Recommended Applications

- Operating switches for car electronic equipment.
- Input on operating switches for telephones, electronic musical instruments, etc.

■ Explanation of Part Numbers

1	2	3	4	5	6	7	8	9
E	V	P	A	S			1	A

4th, 5th, 6th	Operating Force	Travel
ASC	2.2 N	1.0 mm
ASD	2.5 N	
ASA	1.6 N	1.3 mm
ASB	2.0 N	
ASD	2.5 N	
ASE	3.0 N	
ASF	3.5 N	

7th	Travel
B	1.0 mm
C	1.3 mm

8th	Height from Bottom to Knob Top	Push Plate/ Cover Plate Color
1	5 mm	Black / Black

9th	Other
A	Standard

■ Specifications

Type		Snap action/Push-on type SPST	
Electrical	Rating	10 μA 2 Vdc to 50 mA 12 Vdc (Resistive load)	
	Contact Resistance	100 mΩ max.	
	Insulation Resistance	100 MΩ min. (at 100 Vdc)	
	Dielectric Withstanding Voltage	250 Vac for 1 minute	
	Bouncing	10 ms max. (ON, OFF)	
Mechanical	Operating Force	1.6 N±0.5 N, 2.0 N±0.6 N 2.5 N±0.6 N 3.0 N±0.8 N 3.5 N±1.0 N	2.2 N±0.6 N 2.5 N±0.6 N
	Travel	1.3 mm±0.2 mm	1.0 mm±0.2 mm
Endurance	Operating Life	3.5 N type: 30000 cycles min. 1.6 N, 2.0 N, 2.2 N, 2.5 N, 3.0 N types: 100000 cycles min.	
Operating Temperature		−40 °C to +90 °C	
Storage Temperature		−40 °C to +90 °C (Bulk) −20 °C to +60 °C (Taping)	
Minimum Quantity/Packing Unit		2000 pcs. Embossed Taping (Reel Pack)	
Quantity/Carton		10000 pcs.	

Design and specifications are each subject to change without notice. Ask factory for the current technical specifications before purchase and/or use.
Should a safety concern arise regarding this product, please be sure to contact us immediately.

00 Feb. 2013

■ Dimensions in mm (not to scale)

EVPASP

(Embossed Taping)

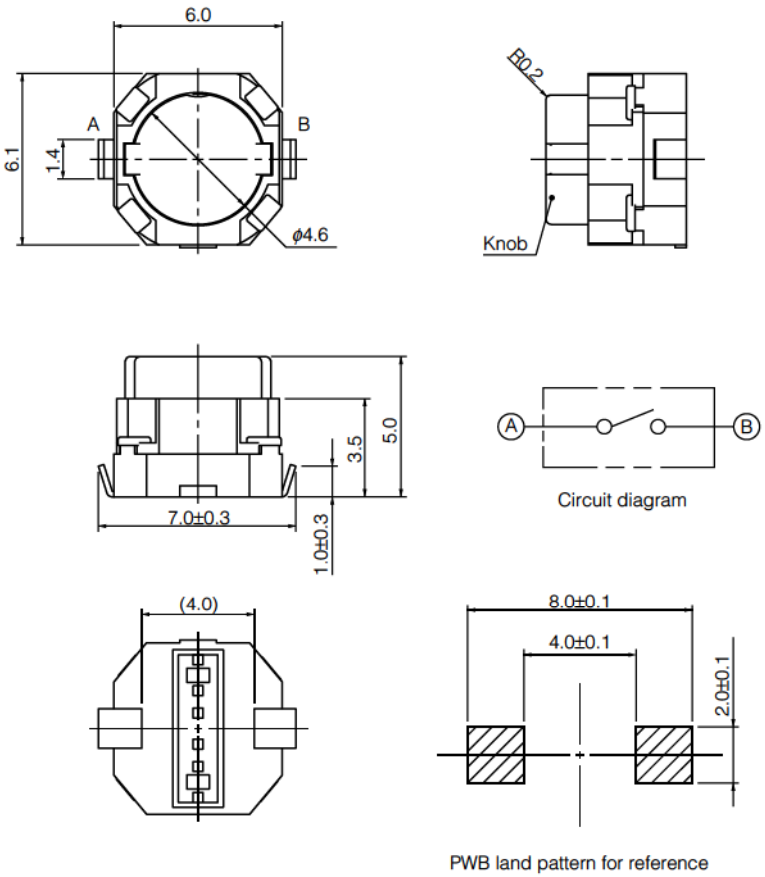

Part Numbers	Operating Force	Travel	H=Height	Push Plate Color	Operating Life
EVPASCB1A	2.2 N	1.0 mm	5.0 mm	Black	100000 cycles
EVPASDB1A	2.5 N	1.0 mm	5.0 mm	Black	100000 cycles
EVPASAC1A	1.6 N	1.3 mm	5.0 mm	Black	100000 cycles
EVPASBC1A	2.0 N	1.3 mm	5.0 mm	Black	100000 cycles
EVPASDC1A	2.5 N	1.3 mm	5.0 mm	Black	100000 cycles
EVPASEC1A	3.0 N	1.3 mm	5.0 mm	Black	100000 cycles
EVPASFC1A	3.5 N	1.3 mm	5.0 mm	Black	30000 cycles

Design and specifications are each subject to change without notice. Ask factory for the current technical specifications before purchase and/or use.
Should a safety concern arise regarding this product, please be sure to contact us immediately.

NEW

■Recommended Reflow Soldering Conditions

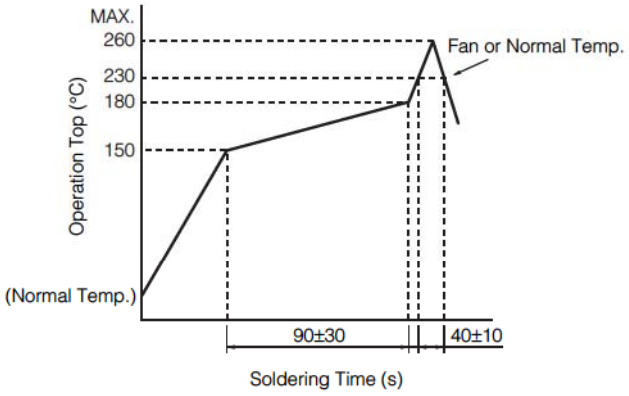

● Embossed Carrier Taping

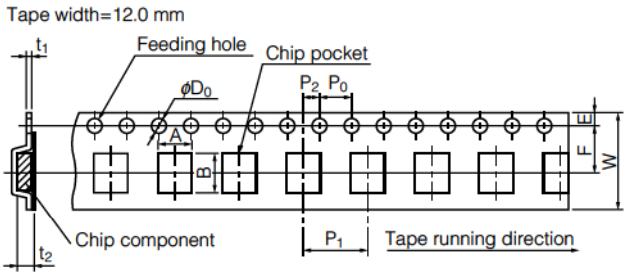

Unit: mm

Part No.	Height	A	B	W	F	E	P_1	P_2	P_0	D_0 Dia.	t_1	t_2
EVPAS	5.0	6.8±0.2	7.7±0.2	12.0±0.3	5.5±0.1	1.75±0.10	8.0±0.1	2.0±0.1	4.0±0.1	$1.5^{+0.1}_{-0}$	0.4±0.1	5.25±0.20

● Standard Reel Dimensions in mm (not to scale)

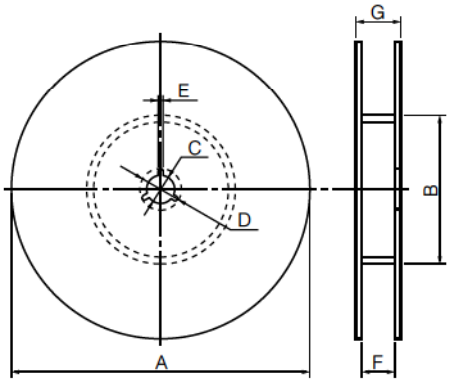

Item	A	B	C	D	E
Rate (mm)	φ380.0±2.0	φ80.0±1.0	φ13.0±0.5	φ21.0±1.0	2.0±0.5

Item	F	G
Rate (mm)	13.5±1.0	17.5±1.0

Design and specifications are each subject to change without notice. Ask factory for the current technical specifications before purchase and/or use.
Should a safety concern arise regarding this product, please be sure to contact us immediately.

6 mm Square Long Travel 2R Light Touch Switches

Type: **EVQPV**

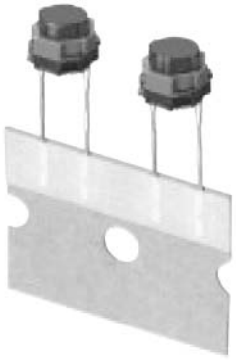

■ Features

- External dimensions : 6.0 mm×6.1 mm, Height 5.0 mm (Including the push plate)
- High mountability, section terminals and radial taping package
- Low contact resistance and steady contact characteristics

■ Recommended Applications

- Operating switches for car electronic equipment.
- Input on operating switches for telephones, electronic musical instruments, etc.

■ Explanation of Part Numbers

1	2	3	4	5	6	7	8	9
E	V	Q	P	V		0	5	K
			Type					

6th	Operating Force	Push Travel
A	2.2 N	1.0 mm
2	1.6 N	1.3 mm
G	2.0 N	
F	2.5 N	
W	3.5 N	

7th & 8th	Mounting Height
05	5.0 mm

9th	Push Plate Color
K	Black

■ Specifications

Type		Snap action/Push-on type SPST	
Electrical	Rating	10 µA 2 Vdc to 50 mA 12 Vdc (Resistive load)	
	Contact Resistance	100 mΩ max.	
	Insulation Resistance	100 MΩ min. (at 100 Vdc)	
	Dielectric Withstanding Voltage	250 Vac for 1 minute	
	Bouncing	10 ms max. (ON, OFF)	
Mechanical	Operating Force	2.2 N	1.6 N, 2.0 N, 2.5 N, 3.5 N
	Travel	1.0 mm±0.2 mm	1.3 mm±0.2 mm
Endurance	Operating Life	100000 cycles min. (3.5 N type : 30000 cycles min.)	
Operating Temperature		–30 °C to +85 °C	
Storage Temperature		–40 °C to +85 °C (Bulk) –20 °C to +40 °C (Taping)	
Minimum Quantity/Packing Unit		2500 pcs. Radial Taping (Reel Pack)	
Quantity/Carton		25000 pcs.	

Design and specifications are each subject to change without notice. Ask factory for the current technical specifications before purchase and/or use.
Should a safety concern arise regarding this product, please be sure to contact us immediately.

00 Oct. 2012

■ Dimensions in mm (not to scale)

EVQPV

(Radial Taping)

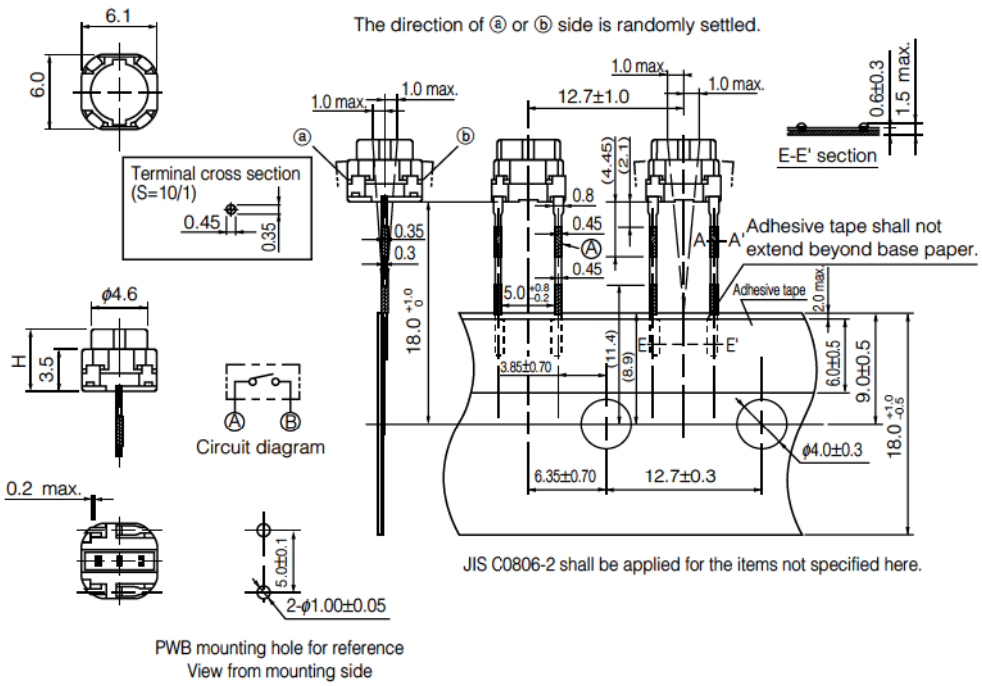

Part Numbers	Operating Force	Travel	H=Height	Push Plate Color	Operating Life
EVQPVA05K	2.2 N	1.0 mm	5.0 mm	Black	100000 cycles
EVQPV205K	1.6 N	1.3 mm	5.0 mm	Black	100000 cycles
EVQPVG05K	2.0 N	1.3 mm	5.0 mm	Black	100000 cycles
EVQPVF05K	2.5 N	1.3 mm	5.0 mm	Black	100000 cycles
EVQPVW05K	3.5 N	1.3 mm	5.0 mm	Black	30000 cycles

Design and specifications are each subject to change without notice. Ask factory for the current technical specifications before purchase and/or use.
Should a safety concern arise regarding this product, please be sure to contact us immediately.

8 mm Square Long Travel SMD Light Touch Switches

Type: **EVQQ1**

■ Features

- External dimensions : 8.5 mm×8.5 mm, Height 6.5 mm (Including the push plate)
- High operating force which prevents incorrect operation
- Reliable contact (dust-proof design)

■ Recommended Applications

- Operating switches for car electronic equipment, car audio systems, etc.
- Steering switches

■ Explanation of Part Numbers

1	2	3	4	5	6	7	8	9
E	V	Q	Q	1				
Product Code			Type			Height		Push Plate Color

■ Specifications

Type		Snap action/Push-on 1-pole 1-throw SPST
Electrical	Rating	10 μA 2 Vdc to 50 mA 12 Vdc (Resistive load)
	Contact Resistance	100 mΩ max.
	Insulation Resistance	100 MΩ min. (at 100 Vdc)
	Dielectric Withstanding Voltage	250 Vac for 1 minute
	Bouncing	10 ms max. (ON, OFF)
Mechanical	Operating Force	4 N, 5 N
	Travel	1.0 mm
Endurance	Operating Life	100000 cycles min.
Operating Temperature		−40 °C to +85 °C
Storage Temperature		−40 °C to +85 °C (Bulk) −20 °C to +60 °C (Taping)
Minimum Quantity/Packing Unit		1000 pcs. Embossed Taping (Reel Pack)
Quantity/Carton		10000 pcs.

Design and specifications are each subject to change without notice. Ask factory for the current technical specifications before purchase and/or use.
Should a safety concern arise regarding this product, please be sure to contact us immediately.

00 Oct. 2012

■ Dimensions in mm (not to scale)

EVQQ1

(Embossed Taping)

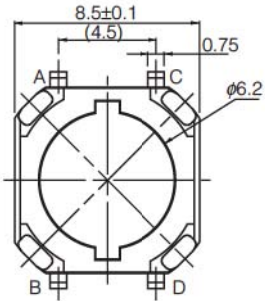

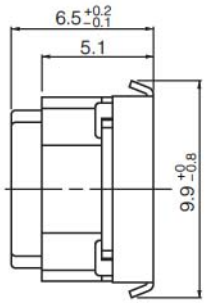

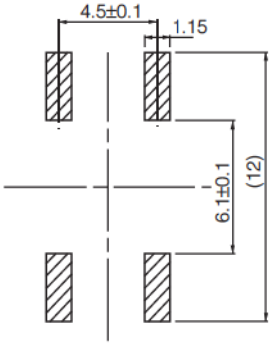

PWB land pattern for reference

Circuit diagram

Part Numbers	Operating Force	Push Plate Color
EVQQ1D06M	4.0 N	Natural
EVQQ1E06K	5.0 N	Black

■ Recommended Reflow Soldering Conditions

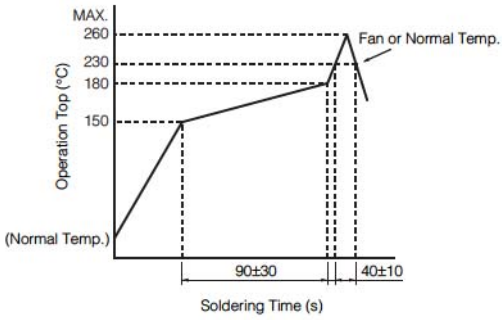

● Embossed Carrier Taping

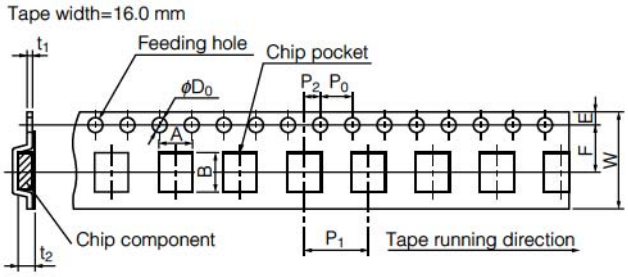

Unit: mm

Part No.	Height	A	B	W	F	E	P_1	P_2	P_0	D_0 Dia.	t_1	t_2
EVQQ1	6.5	8.9±0.2	10.1±0.2	16.0±0.3	7.5±0.1	1.75±0.10	12.0±0.1	2.0±0.1	4.0±0.1	$1.5^{+0.1}_{-0}$	0.40±0.05	6.8±0.2

● Standard Reel Dimensions in mm (not to scale)

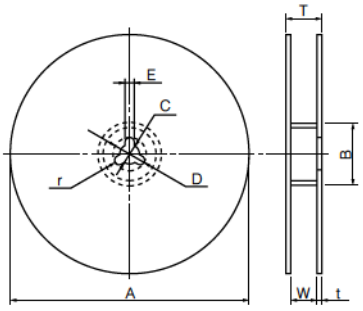

Item	A	B	C	D	E
Rate (mm)	ϕ380.0±2.0	ϕ80.0±1.0	ϕ13.0±0.5	ϕ21.0±1.0	2.0±0.5

Item	W	T	t	r
Rate (mm)	17.5±0.5	21.5±1.0	1.0 to 3.0	1.0±0.5

Design and specifications are each subject to change without notice. Ask factory for the current technical specifications before purchase and/or use.
Should a safety concern arise regarding this product, please be sure to contact us immediately.

8 mm Square Long Travel 2R Light Touch Switches

Type: **EVQQJ**

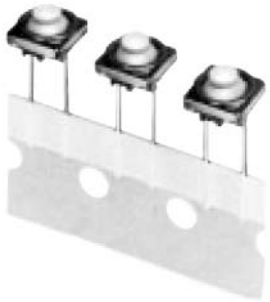

■ Features

- External dimensions : 8.0 mm×8.0 mm,
  Height 5.0 mm, 5.5 mm, 6.1 mm (Including the push plate)
- Long life (self-cleaning)
- Low contact resistance with metal contacts
- Small bouncing

■ Recommended Applications

- Operating Switches for car air conditioners,
  car audio systems, etc.
- Push switches for camcorders
- Ten-key switches for telephones

■ Explanation of Part Numbers

1	2	3	4	5	6	7	8	9
E	V	Q	Q	J				
Product Code			Type			Height		Push Plate Color

■ Specifications

Type		Snap action/Push-on 1-pole 1-throw SPST			
Electrical	Rating	10 μA 2 Vdc to 5 mA 12 Vdc. (Resistive load)			
	Contact Resistance	200 mΩ max.			
	Insulation Resistance	50 MΩ min. (at 100 Vdc)			
	Dielectric Withstanding Voltage	250 Vac for 1 minute			
	Bouncing	10 ms max. (ON, OFF)			
Mechanical	Operating Force	0.8 N±0.4 N	1.3 N±0.6 N	2.5 N±0.6 N	3.0 N±0.6 N
	Travel	1.0 mm	1.0 mm	1.2 mm	1.75 mm
Endurance	Operating Life	1000000 cycles min.	100000 cycles min.	100000 cycles min.	100000 cycles min.
Operating Temperature		–20 °C to +70 °C			
Storage Temperature		–40 °C to +85 °C (Bulk) –20 °C to +40 °C (Taping)			
Minimum Quantity/Packing Unit		1000 pcs. Radial Taping (Reel Pack)			
Quantity/Carton		10000 pcs.			

■ Application Notes:

- Washing is not allowed.
- Inclination of pushing knob shall be 3 ° max.

Design and specifications are each subject to change without notice. Ask factory for the current technical specifications before purchase and/or use.
Should a safety concern arise regarding this product, please be sure to contact us immediately.

■ Dimensions in mm (not to scale)

EVQQJ

(Radial Taping)

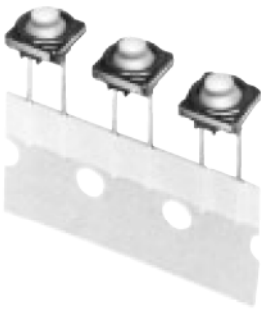

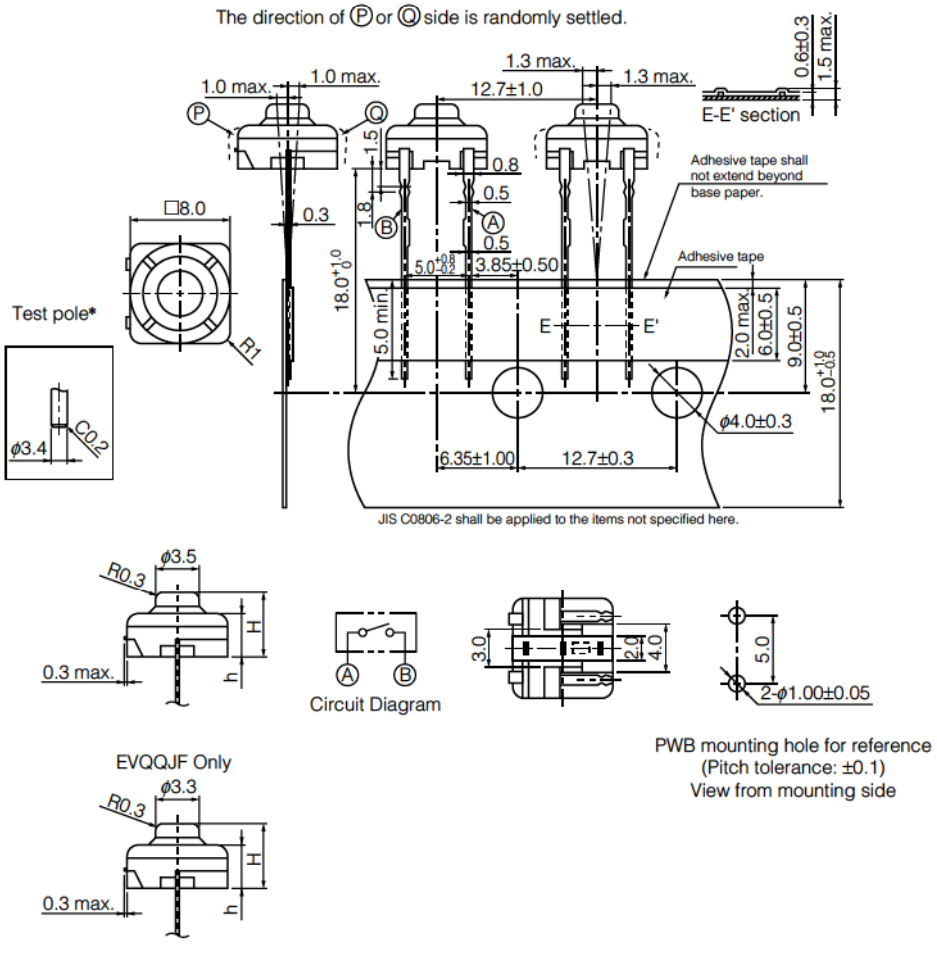

Part Numbers	Operating Force	Travel	H=Height	h=Mounting Base	Push Plate Color	Operating Life
EVQQJJ05Q	0.8 N	1.0 mm	5.0 mm	3.5 mm max.	Grey	1000000 cycles
EVQQJE05D	1.3 N	1.0 mm	5.0 mm	3.6 mm max.	Orange	100000 cycles
EVQQJD05B	2.5 N	1.2 mm	5.5 mm	3.8 mm max.	Blue	100000 cycles
EVQQJF06Q	3.0 N	1.75 mm	6.1 mm	4.0 mm max.	Grey	100000 cycles

Design and specifications are each subject to change without notice. Ask factory for the current technical specifications before purchase and/or use.
Should a safety concern arise regarding this product, please be sure to contact us immediately.

10 mm Square Center Space Long Travel SMD Light Touch Switches

Type: **EVPAD**

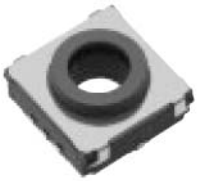

■ Features

- The open center space allows for flexibility in choosing a LED Up to a 4.2-mm diameter chip LED can be mounted.
- Provides an excellent operational feel.
  - Crisp tactile feedback
  - Long stroke (1 mm)
- Supports auto reflow soldering.

■ Recommended Applications

- Operating switches for car electronic equipment (car audio systems, car air conditioners, etc.)

■ Explanation of Part Numbers

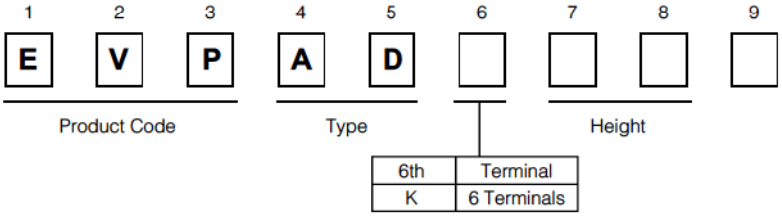

■ Specifications

Type		Snap action/Push-on type SPST
Electrical	Rating	10 μA 2 Vdc to 50 mA 12 Vdc (Resistive load)
	Contact Resistance	100 mΩ max.
	Insulation Resistance	100 MΩ min. (at 100 Vdc)
	Dielectric Withstanding Voltage	250 Vac for 1 minute
	Bouncing	10 ms max. (ON, OFF)
Mechanical	Operating Force	4.0 N±0.8 N
	Travel	1.0 mm±0.15 mm
Endurance	Operating Life	100000 cycles min.
Operating Temperature		−40 °C to +85 °C
Storage Temperature		−40 °C to +85 °C (Bulk) −20 °C to +60 °C (Taping)
Minimum Quantity/Packing Unit		1000 pcs. Embossed Taping (Reel Pack)
Quantity/Carton		5000 pcs.

Design and specifications are each subject to change without notice. Ask factory for the current technical specifications before purchase and/or use.
Should a safety concern arise regarding this product, please be sure to contact us immediately.

■ Dimensions in mm (not to scale)

EVPADK04K

(Embossed Taping)

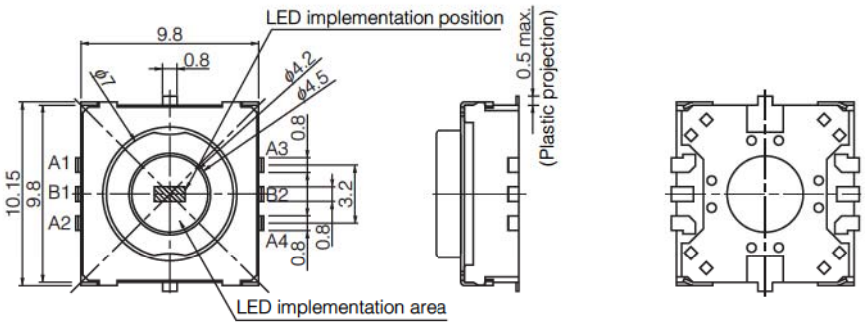

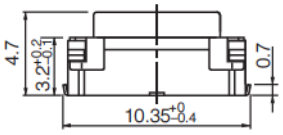

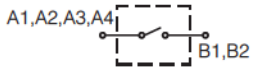

Circuit Diagram

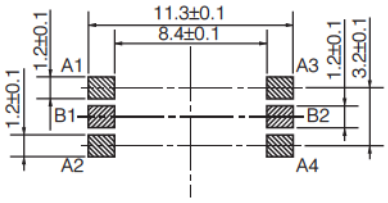

PWB land pattern for reference

(Precautions for pattern design)

✻ Note that the terminals are exposed at the sections shaded with " ▩ "

✻ Establish electrical connection at A1, A2, A3, and A4 to improve the contact performance.

■ Recommended Reflow Soldering Conditions

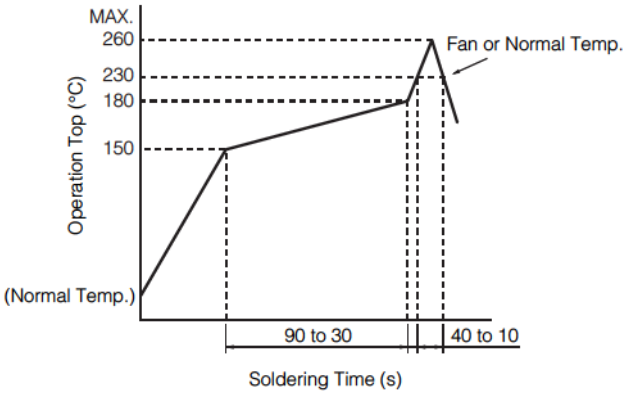

● Embossed Carrier Taping

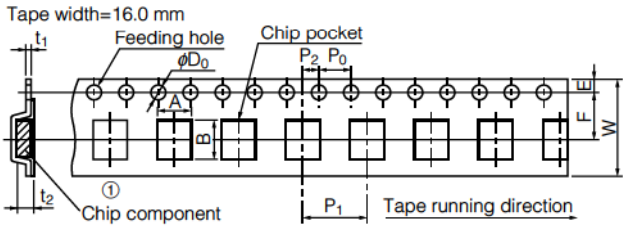

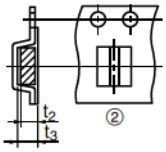

The delivered carrier tape shape is either ① or ②.

Dimension t_3 only applies to shape ②.

Unit: mm

Part No.	Height	A	B	W	F	E	P_1	P_2	P_0	D_0 Dia	t_1	t_2	t_3
EVPAD	4.6	10.7±0.2	10.7±0.2	16.0±0.3	7.5±0.1	1.75±0.10	12.0±0.1	2.0±0.1	4.0±0.1	$1.5^{+0.1}_{-0}$	0.40±0.05	4.8±0.2	5.8±2.0

● Standard Reel Dimensions in mm (not to scale)

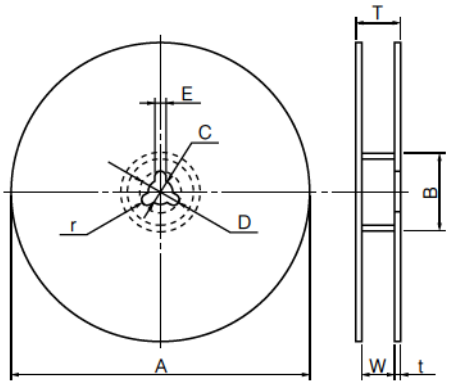

Item	A	B	C	D	E
Rate (mm)	φ380.0±2.0	φ80.0±1.0	φ13.0±0.5	φ21.0±1.0	2.0±0.5

Item	W	T	t	r
Rate (mm)	17.5±0.5	21.5±1.0	—	—

Design and specifications are each subject to change without notice. Ask factory for the current technical specifications before purchase and/or use.
Should a safety concern arise regarding this product, please be sure to contact us immediately.