FOR-1351 Rev.1.0

REVISION RECORD				
REV	ECN	DESCRIPTION	DRFT	DATE

8P and 8P following no reinforcement.

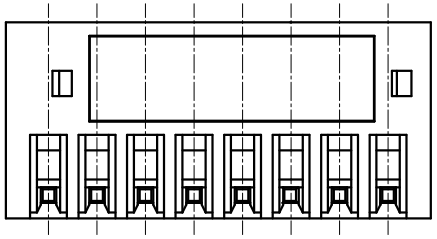

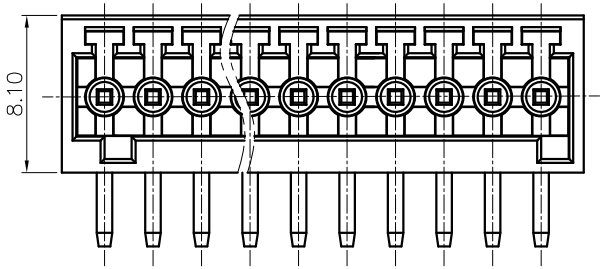

02P

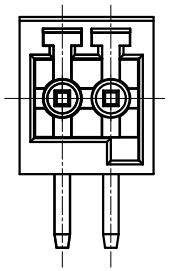

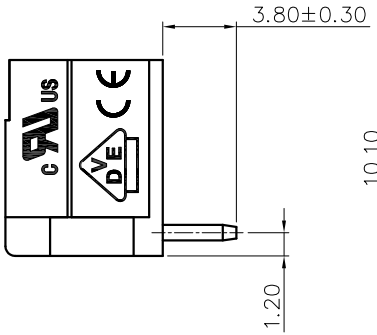

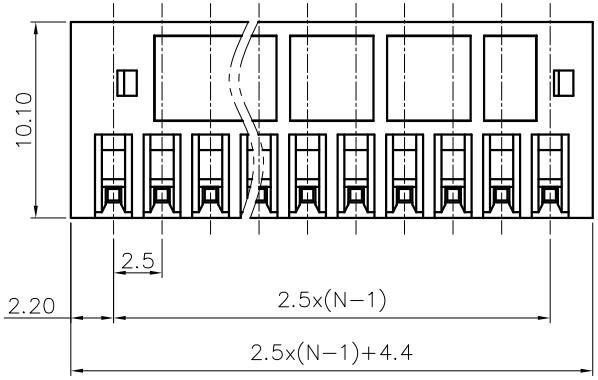

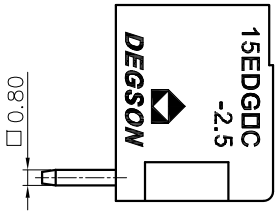

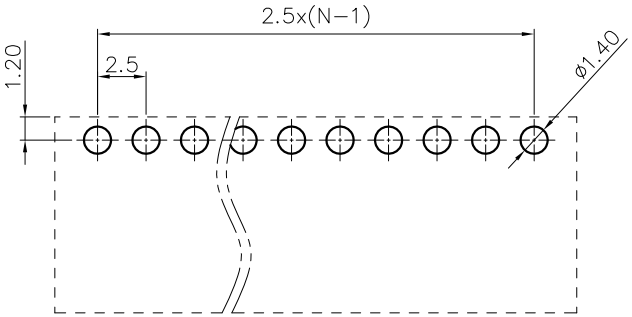

NOTES1:

UL Standard

1.Rated voltage/current : 150V / 4A

2.Withstanding voltage : AC1300V/1Min.

IEC Standard

1.

Pollution degree	2
Overvoltage category	Ⅱ
Rate impulse voltage(KV)	2.5KV
Rate voltage(V)	250V
Rate current(A)	5A

NOTES2:

1.Dimension shall be interpreted per ASME Y14.5−2009

2.Pitch : 2.5mm, Poles : N=02~12P

3.Operating temperature: −40℃~+105℃

4.Undimensioned tolerances:

Pitch range in mm			Nominal dimension range in mm					— ⌒ ⌭
TO 6	Over 6 TO 10	Over 10 TO 24	TO 30	Over 30 TO 60	Over 60 TO 100	Over 100 TO 150	Over 150	0.1/10 ∠
±0.15	±0.20	±0.30	±0.30	±0.50	±0.70	±1.00	±1.30	±2°

5.RoHS Compliance

15EDGRC − 2.5 − XXP − 1Y − 00A (H)

(Series No.) (Pitch) (Poles) (Single Pitch) (Color) (H)=(RoHS) 00A=(Standard)

(Color):
1.(Grey)
2.(Blue)
3.(Black)
4.(Green)
5.(Orange)
6.(Red)
7.(Transparent)
8.(Yellow)
9.(White)

DETACHED LISTS			
PART NO.: /	DEGSON® 宁波高松电子有限公司 NINGBO DEGSON ELECTRICAL CO., LTD		
APPD: /	NAME: 15EDGRC-2.5-XXP-1Y-00A(H)		
CHKD: /			
DRFT: /	TITLE: CUSTOMER DRAWING	REV	D0
THIRD ANGLE PROJECTION	DRAWING NO.: /	SHEET	1/1
	MM (INCH) DO NOT SCALE DRAWING	SCALE	1:1