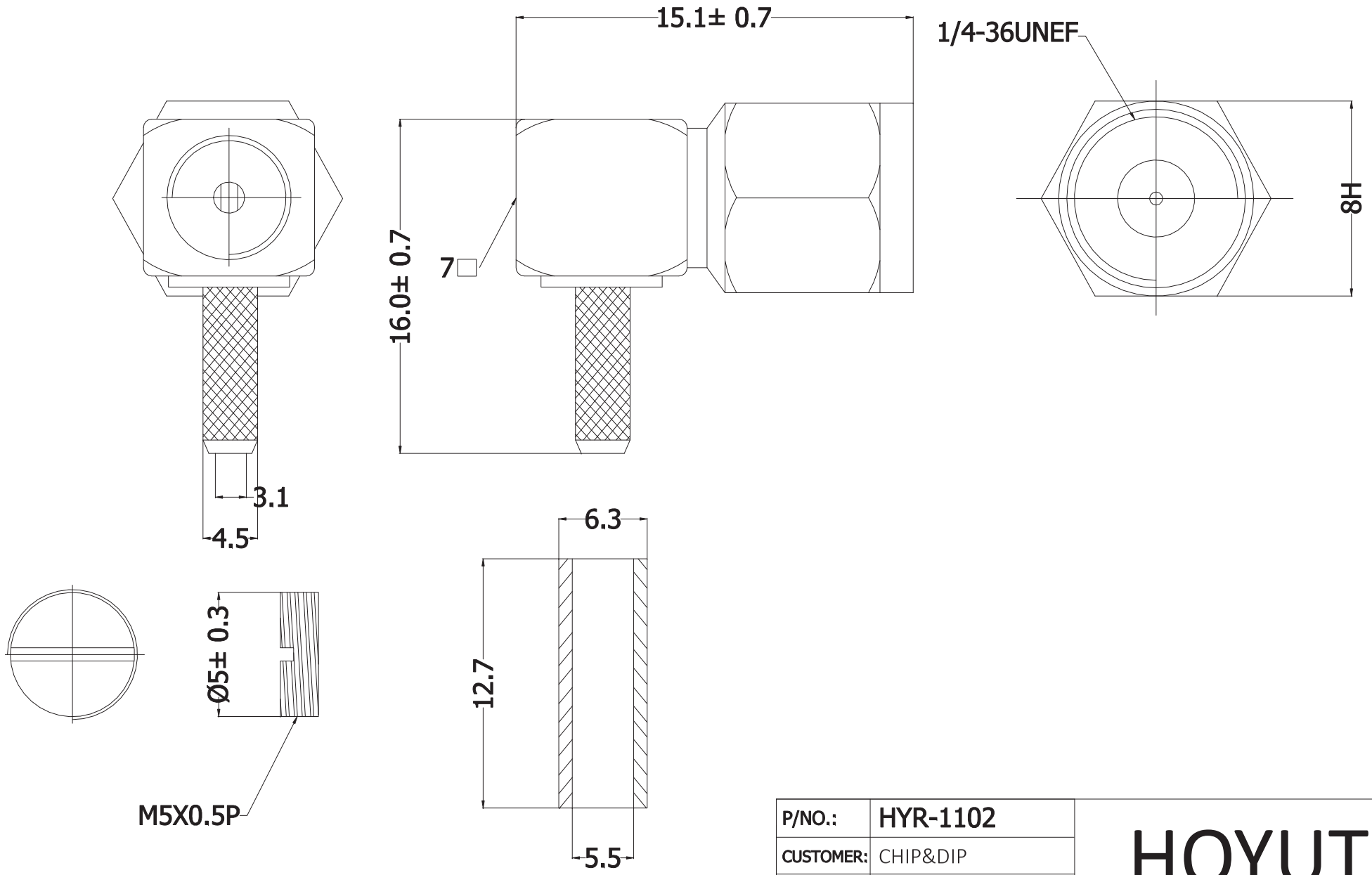

P/NO.:	HYR-1102		
CUSTOMER:	CHIP&DIP		
CUST. P/N.:	HYR-1102		
APP.	Eric	UNITS	m/m

HOYUTEC
International Co., Ltd.

1.0	NEW DRAWING	2020/12/01	CHK.	Carmen	DATE	2020/12/01	DES.: RIGHT ANGLE SMA MALE CRIMP TYPE
VER.NO.	DESCRIPTION	DATE	DRAW.	GuangHuel	SHEET	1/1	DRAW NO.: HYR-1102 VER 1.0