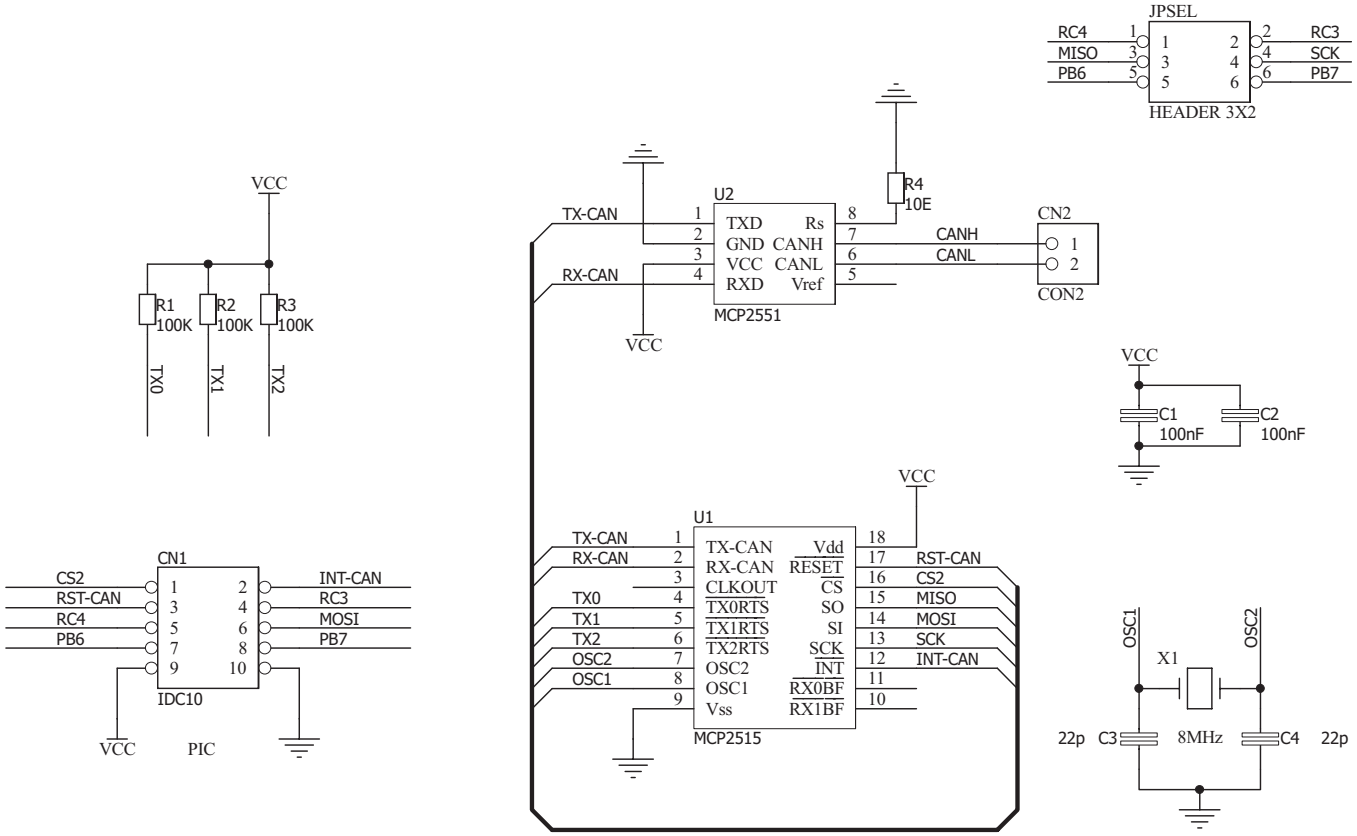
JPSEL
RC4
MISO
PB6
RC3
SCK
PB7
HEADER 3X2
VCC
R1
100K
R2
100K
R3
100K
TX0
TX1
TX2
U2
TX-CAN
RX-CAN
TXD
GND
VCC
RXD
Rs
CANH
CANL
Vref
MCP2551
R4
10E
CN2
CANH
CANL
CON2
C1
100nF
C2
100nF
U1
TX-CAN
RX-CAN
TX0
TX1
TX2
OSC2
OSC1
CLKOUT
TX0RTS
TX1RTS
TX2RTS
Vss
Vdd
RESET
CS
SO
SI
SCK
INT
RX0BF
RX1BF
RST-CAN
CS2
MISO
MOSI
SCK
INT-CAN
MCP2515
CN1
CS2
RST-CAN
RC4
PB6
INT-CAN
RC3
MOSI
PB7
IDC10
PIC
OSC1
OSC2
X1
8MHz
22p
C3
C4
22p