PART CHARACTERISTICS		
NUMBER OF POSITION	ASSEMBLY ITEM NUMBER	MATERIAL
02	43025-0200	"B"
04	43025-0400	
06	43025-0600	
08	43025-0800	
10	43025-1000	
12	43025-1200	"A"
14	43025-1400	"B"
16	43025-1600	"A"
18	43025-1800	"B"
20	43025-2000	
22	43025-2200	
24	43025-2400	"A"

CKT. NO.	DIM. "A" +.014 -.010 / +0.35 -0.25	DIM. "B"
2	.152/(3.86)	N/A
4	.270/(6.85)	.118/(3.00)
6	.388/(9.85)	.236/(6.00)
8	.506/(12.85)	.354/(9.00)
10	.624/(15.85)	.472/(12.00)
12	.742/(18.85)	.591/(15.00)
14	.860/(21.85)	.709/(18.00)
16	.978/(24.85)	.827/(21.00)
18	1.096/(27.85)	.945/(24.00)
20	1.215/(30.85)	1.063/(27.00)
22	1.333/(33.85)	1.181/(30.00)
24	1.451/(36.85)	1.299/(33.00)

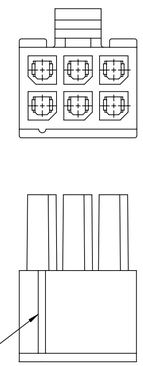

HOUSING SHOWN WITH
FIRST CIRCUIT IDENTIFIER RIB
(SEE NOTE #11)

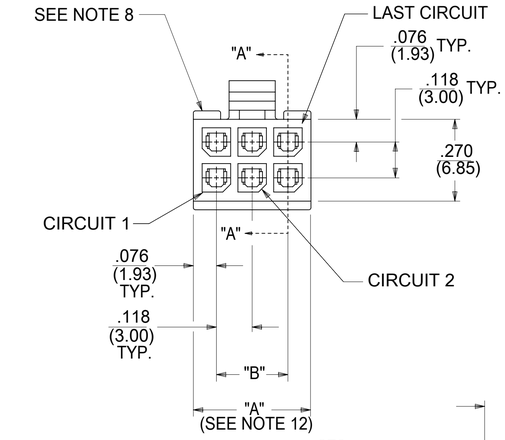

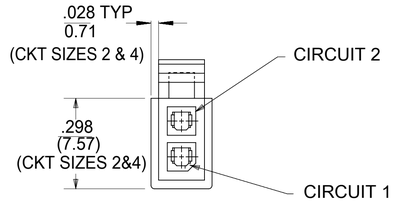

2 CIRCUIT HOUSING

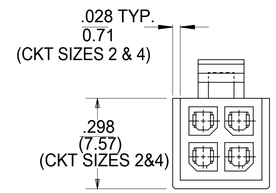

4 CIRCUIT PULL TAB GEOMETRY

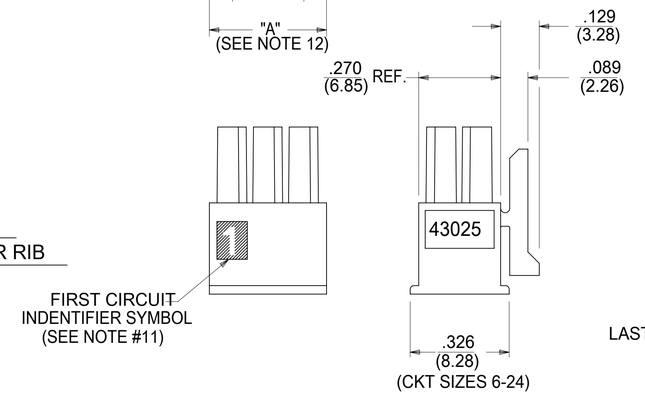

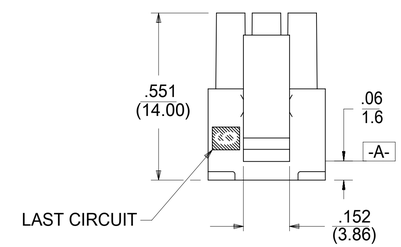

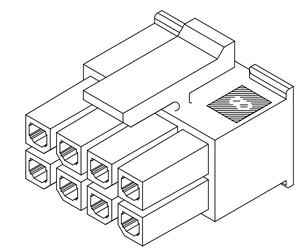

RECEPTACLE
ISO VIEW
(8 CIRCUIT SHOWN)
(SEE NOTE 9 FOR TESTING)

NOTES:

1) HOUSING MATERIAL:
   "A" - UNFILLED POLYESTER, RATED U.L. 94V-0, COLOR IS BLACK.
   "B" - UNFILLED NYLON, RATED U.L. 94V-0, LOW HALOGEN, COLOR IS BLACK.
2) FINISH: N/A
3) PRODUCT SPECIFICATION: PS-43045
4) PACKAGING SPECIFICATION: PK-43025-001
5) THIS RECEPTACLE MATES WITH 43020, 43045.
6) THIS RECEPTACLE TO BE USED WITH MOLEX FEMALE TERMINAL SERIES 43030 OR 46235. SEE SECTION "A"-"A" FOR TERMINAL ORIENTATION IN HOUSING.
7) FOR OVERMOLDING PARAMETERS SEE APPLICATION SPECIFICATION 430250000-AS.
8) TOP PULL TABS ARE NOT AVAILABLE ON 2 AND 4 CIRCUIT PARTS.
9) MOLEX RECOMMENDS THE USE OF MICRO-FIT TEST PLUG, SERIES NO. 44242-**** WHENEVER TESTING IS PERFORMED. TEST PLUGS MUST NOT BE USED FOR MAKE OR BREAK UNDER LOAD. MOLEX DOES NOT RECOMMEND USING STANDARD MATING COMPONENTS FOR HARNESS TESTING PURPOSES.
10) SOME HOUSINGS MAY HAVE A SMALL GATE BLEMISH NEAR THE GATE THAT DOES NOT AFFECT FUNCTIONALITY.
11) HOUSINGS HAVE EITHER AN IDENTIFIER RIB OR ENGRAVED "1" SYMBOL TO INDICATE CIRCUIT #1. INDENTIFIER TYPE IS TOOL DEPENDENT AND NOT SELECTABLE.
12) DIMENSION 'A' MEASURED AT DATUM -A-
13) THIS PART CONFORMS TO CLASS 'B' REQUIREMENTS OF COSMETIC SPECIFICATION PS-45499-002.
14) TEXT ON PART IS FOR REFERENCE ONLY. TEXT AND TEXT LOCATION MAY VARY DEPENDING ON PART NUMBER AND/OR TOOL.

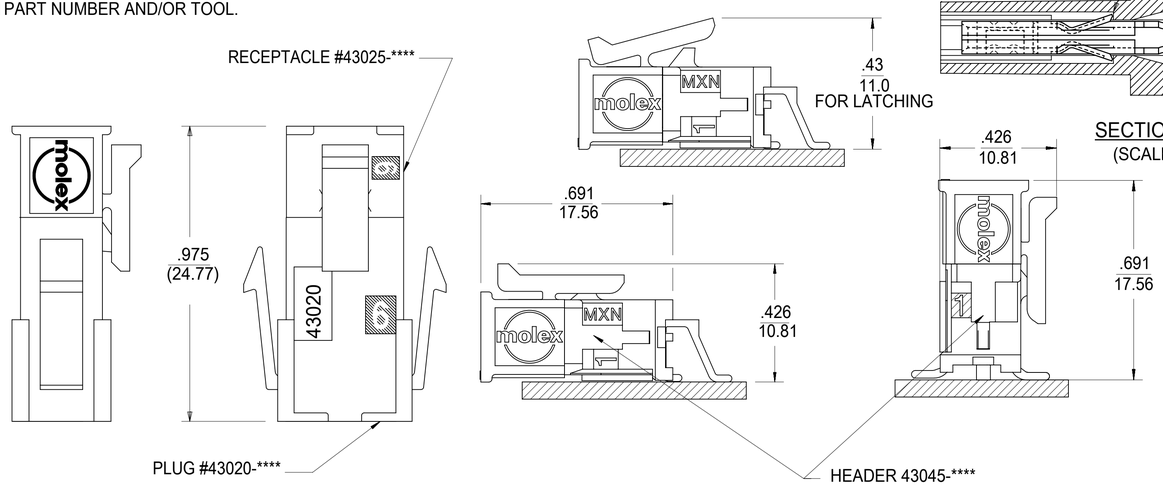

MATED MICRO-FIT CONNECTOR

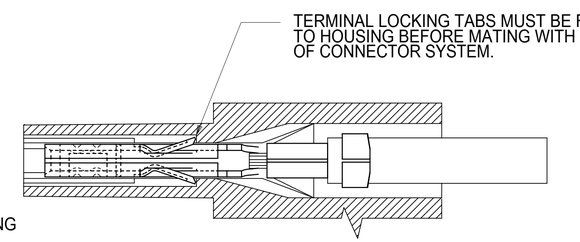

SECTION "B"-"B"
(SCALE 10:1)

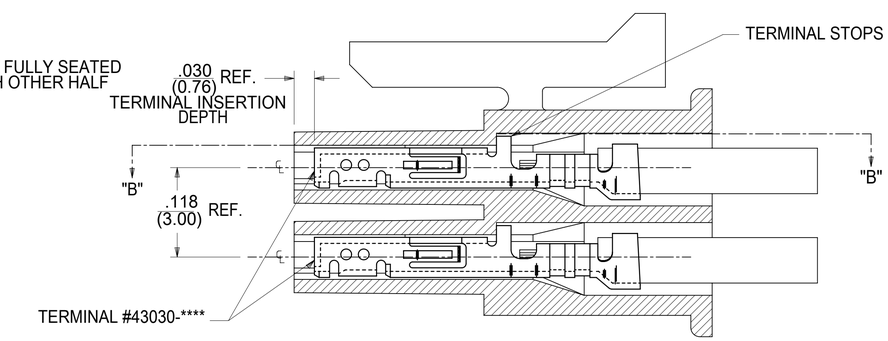

SECTION "A"-"A"
WITH TERMINAL
(SCALE 10:1)

DOCUMENT STATUS	P1	RELEASE DATE	2018/06/01	21:26:12

THIS DRAWING REPLACES DRAWING SDA-43025-****

SYMBOLS: A = 0, E = 0, P = 0, S = 0, ▼ = 0, C = 0, ☒ = 0, ■ = 0, ▽ = 0

THIS DRAWING CONTAINS INFORMATION THAT IS PROPRIETARY TO MOLEX ELECTRONIC TECHNOLOGIES, LLC AND SHOULD NOT BE USED WITHOUT WRITTEN PERMISSION

DIMENSION UNITS	SCALE
IN/MM	NTS

GENERAL TOLERANCES (UNLESS SPECIFIED)

	MM	INCH
4 PLACES	±	±
3 PLACES	±	± 0.01
2 PLACES	± 0.25	± 0.014
1 PLACE	± 0.35	±
0 PLACES	±	±
ANGULAR TOL	± 0.5 °	

DRAFT WHERE APPLICABLE MUST REMAIN WITHIN DIMENSIONS

CURRENT REV DESC: INITIAL RELEASE

EC NO:	168740	
DRWN:	AZAHIROVIC	2018/03/06
CHK'D:	SSOUSEK	2018/06/01
APPR:	FSMITH	2018/06/01

INITIAL REVISION:

DRWN:	A.F.G.	1993/01/14
APPR:	FSMITH	2016/05/02

THIRD ANGLE PROJECTION | DRAWING: D-SIZE | SERIES: 43025 | MATERIAL NUMBER: SEE TABLE | CUSTOMER | SHEET NUMBER: 1 OF 1

molex

MICRO-FIT (3.0) 2-24 CIRCUIT RECEPTACLE

PRODUCT CUSTOMER DRAWING

DOCUMENT NUMBER	DOC TYPE	DOC PART	REVISION
430250000-SD	PSD	000	A