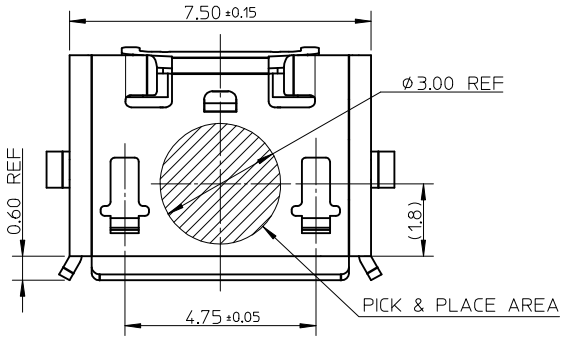

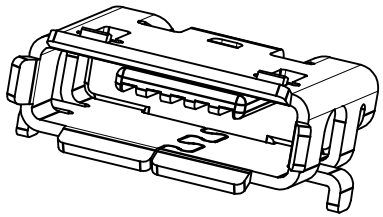

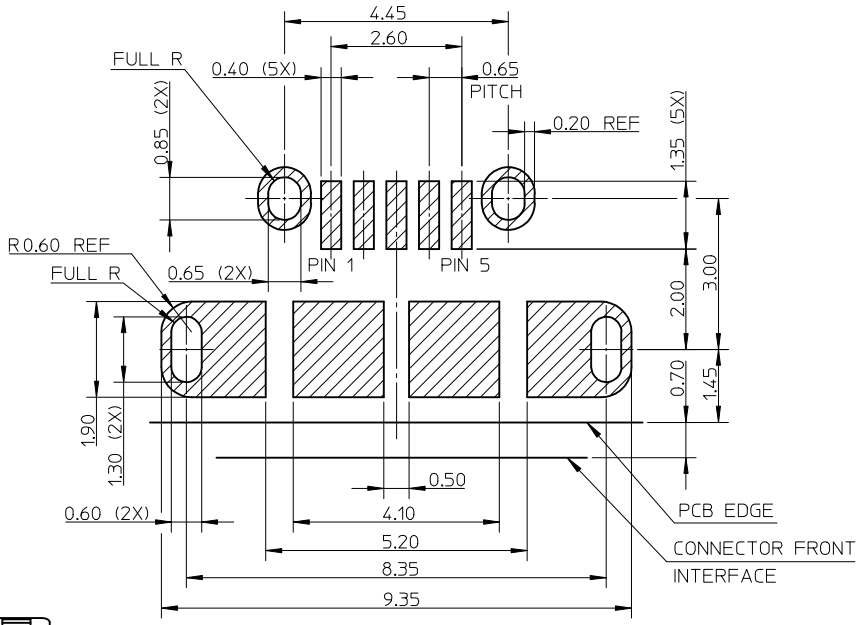

RECOMMENDED P.C.B. PATTERN LAYOUT
GENERAL TOLERANCE: ±0.05

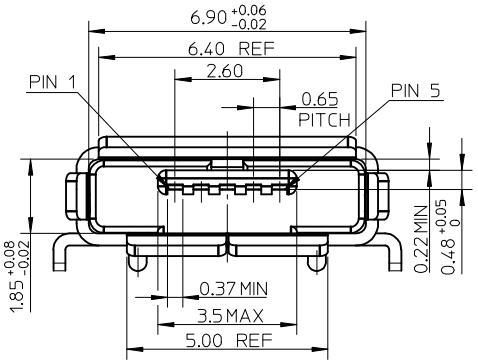

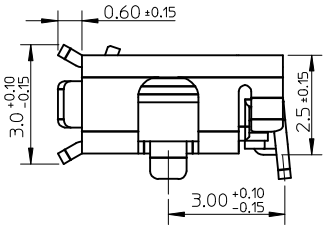

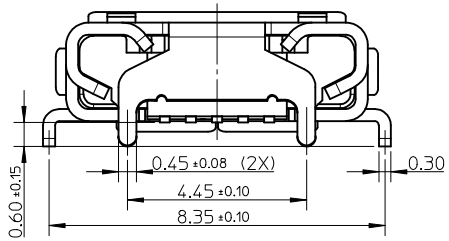

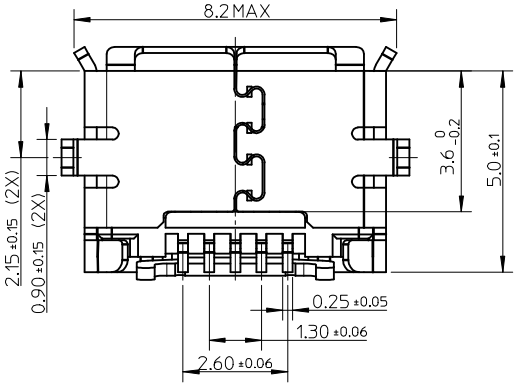

NOTES:

1. MATERIAL:
   HOUSING: LCP, BLACK, UL94V-0;
   TERMINAL: COPPER ALLOY, THICKNESS: 0.15mm;
   SHELL: STAINLESS STEEL, THICKNESS: 0.30mm.
2. PLATING:
   TERMINAL: CONTACT AREA: GOLD FLASH (0.11 MICRON MIN.) OVER MINIMUM 0.75 MICRON Pd/Ni.
   SOLDER TAIL AREA: GOLD FLASH (0.05 MICRON MINIMUM).
   UNDER PLATING: NICKEL 2.0 MICROMN MINIMUM.
   SHELL: MATTE TIN 1.27 MICRON MINIMUM.
   UNDER PLATING: NICKEL 1.27 MICRON MINIMUM.
3. TAIL COPLANARITY 0.08mm MAXIMUM.
4. PRODUCT SPECIFICATION: PS-47589-001.
5. PACKAGING SEPCIFICATION: PK-47589-001.
6. COMPLIANT TO RoHS DIRECTIVE 2002/95/EC AND ELV 2000/53/EC.

REVISED			REV	DESCRIPTION
EC NO: SH2014-0260			T	
DRWN:XQZHANG	2013/12/23			
CH'KD:XQZHANG	2013/12/23			
APPR:AYIN	2014/02/11			

QUALITY SYMBOLS: F_A=0, F_C=0, F_P=0

GENERAL TOLERANCES (UNLESS SPECIFIED)	mm	INCH
4 PLACES	± ---	± ---
3 PLACES	± ---	± ---
2 PLACES	± 0.15	± ---
1 PLACE	± 0.25	± ---
0 PLACE	±	±
ANGULAR ± 3 °		

DRAFT WHERE APPLICABLE MUST REMAIN WITHIN DIMENSIONS

DIMENSION STYLE: MM ONLY	SCALE: 1:1	DESIGN UNITS: METRIC	THIRD ANGLE PROJECTION
DRAWN BY: XJSONG	DATE: 2007/03/06	TITLE: MICRO USB AB REC. BOTTOM MOUNT ASS'Y	
CHECKED BY: JTIAN	DATE: 2007/03/06		
APPROVED BY: JNCHEN	DATE: 2007/03/06	molex	
MATERIAL NO.: 47589-0001		DOCUMENT NO.: SD-47589-001	SHEET NO.: 1 OF 1
SIZE: A3			

THIS DRAWING CONTAINS INFORMATION THAT IS PROPRIETARY TO MOLEX INCORPORATED AND SHOULD NOT BE USED WITHOUT WRITTEN PERMISSION