DATA SHEET

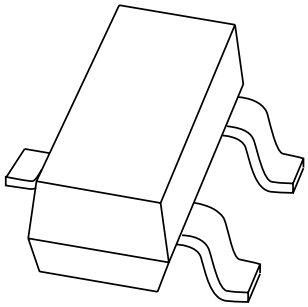

BCW60 series
NPN general purpose transistors

Product data sheet
Supersedes data of 1997 Mar 10

1999 Apr 22

founded by Philips

NPN general purpose transistors BCW60 series

FEATURES

- Low current (max. 100 mA)
- Low voltage (max. 32 V).

APPLICATIONS

- General purpose switching and amplification.

DESCRIPTION

NPN transistor in a SOT23 plastic package.
PNP complements: BCW61 series.

MARKING

TYPE NUMBER	MARKING CODE(1)
BCW60B	AB∗
BCW60C	AC∗
BCW60D	AD∗

Note

1. ∗ = p : Made in Hong Kong.
   ∗ = t : Made in Malaysia.

PINNING

PIN	DESCRIPTION
1	base
2	emitter
3	collector

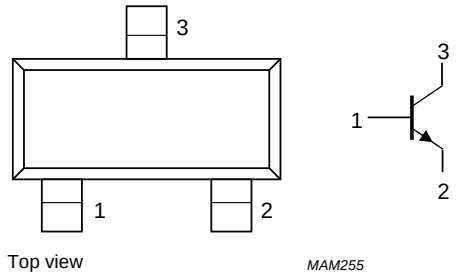

Fig.1 Simplified outline (SOT23) and symbol.

LIMITING VALUES

In accordance with the Absolute Maximum Rating System (IEC 134).

SYMBOL	PARAMETER	CONDITIONS	MIN.	MAX.	UNIT
V_{CBO}	collector-base voltage	open emitter	–	32	V
V_{CEO}	collector-emitter voltage	open base	–	32	V
V_{EBO}	emitter-base voltage	open collector	–	5	V
I_C	collector current (DC)		–	100	mA
I_{CM}	peak collector current		–	200	mA
I_{BM}	peak base current		–	200	mA
P_{tot}	total power dissipation	$T_{amb} \leq 25$ °C	–	250	mW
T_{stg}	storage temperature		−65	+150	°C
T_j	junction temperature		–	150	°C
T_{amb}	operating ambient temperature		−65	+150	°C

THERMAL CHARACTERISTICS

SYMBOL	PARAMETER	CONDITIONS	VALUE	UNIT
$R_{th\ j\text{-}a}$	thermal resistance from junction to ambient	note 1	500	K/W

Note

1. Transistor mounted on an FR4 printed-circuit board.

CHARACTERISTICS

T_{amb} = 25 °C unless otherwise specified.

SYMBOL	PARAMETER	CONDITIONS	MIN.	TYP.	MAX.	UNIT
I_{CBO}	collector cut-off current	$I_E = 0$; $V_{CB} = 32$ V	–	–	20	nA
		$I_E = 0$; $V_{CB} = 32$ V; $T_{amb} = 150$ °C	–	–	20	μA
I_{EBO}	emitter cut-off current	$I_C = 0$; $V_{EB} = 4$ V	–	–	20	nA
h_{FE}	DC current gain	$I_C = 10$ μA; $V_{CE} = 5$ V				
	BCW60B		20	–	–	
	BCW60C		40	–	–	
	BCW60D		100	–	–	
	DC current gain	$I_C = 2$ mA; $V_{CE} = 5$ V				
	BCW60B		180	–	310	
	BCW60C		250	–	460	
	BCW60D		380	–	630	
	DC current gain	$I_C = 50$ mA; $V_{CE} = 1$ V				
	BCW60B		70	–	–	
	BCW60C		90	–	–	
	BCW60D		100	–	–	
V_{CEsat}	collector-emitter saturation voltage	$I_C = 10$ mA; $I_B = 0.25$ mA	50	–	350	mV
		$I_C = 50$ mA; $I_B = 1.25$ mA	100	–	550	mV
V_{BEsat}	base-emitter saturation voltage	$I_C = 10$ mA; $I_B = 0.25$ mA	600	–	850	mV
		$I_C = 50$ mA; $I_B = 1.25$ mA	0.7	–	1.05	V
V_{BE}	base-emitter voltage	$I_C = 10$ μA; $V_{CE} = 5$ V	–	520	–	mV
		$I_C = 2$ mA; $V_{CE} = 5$ V	550	650	750	mV
		$I_C = 50$ mA; $V_{CE} = 1$ V	–	780	–	mV
C_c	collector capacitance	$I_E = i_e = 0$; $V_{CB} = 10$ V; f = 1 MHz	–	1.7	–	pF
C_e	emitter capacitance	$I_C = i_c = 0$; $V_{EB} = 0.5$ V; f = 1 MHz	–	11	–	pF
f_T	transition frequency	$I_C = 10$ mA; $V_{CE} = 5$ V; f = 100 MHz; note 1	100	250	–	MHz
F	noise figure	$I_C = 200$ μA; $V_{CE} = 5$ V; $R_S = 2$ kΩ; f = 1 kHz; B = 200 Hz	–	2	6	dB

Note

1. Pulse test: $t_p \leq 300$ μs; $\delta \leq 0.02$.

PACKAGE OUTLINE

Plastic surface mounted package; 3 leads **SOT23**

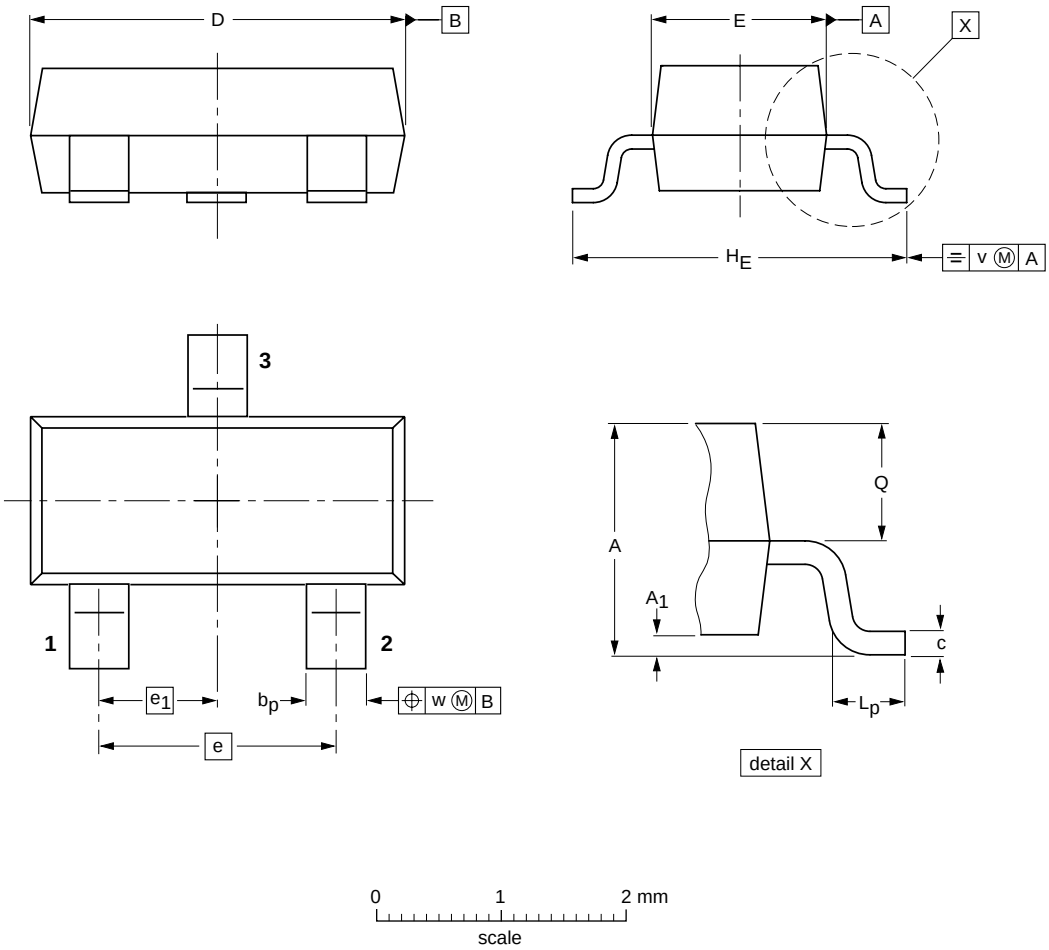

DIMENSIONS (mm are the original dimensions)

UNIT	A	A_1 max.	b_p	c	D	E	e	e_1	H_E	L_p	Q	v	w
mm	1.1 0.9	0.1	0.48 0.38	0.15 0.09	3.0 2.8	1.4 1.2	1.9	0.95	2.5 2.1	0.45 0.15	0.55 0.45	0.2	0.1

OUTLINE VERSION	REFERENCES				EUROPEAN PROJECTION	ISSUE DATE
	IEC	JEDEC	EIAJ			
SOT23		TO-236AB				~~97-02-28~~ 99-09-13