SC766 SINGLE POLE ROCKER SWITCHES

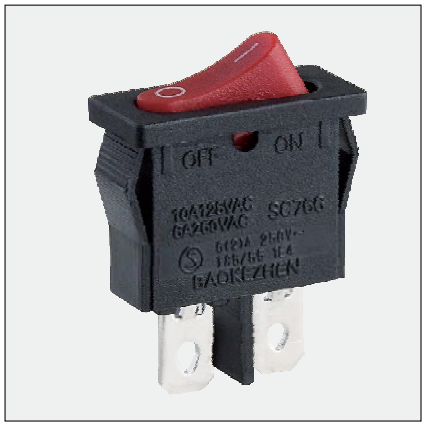

SC766-1VAT-20G

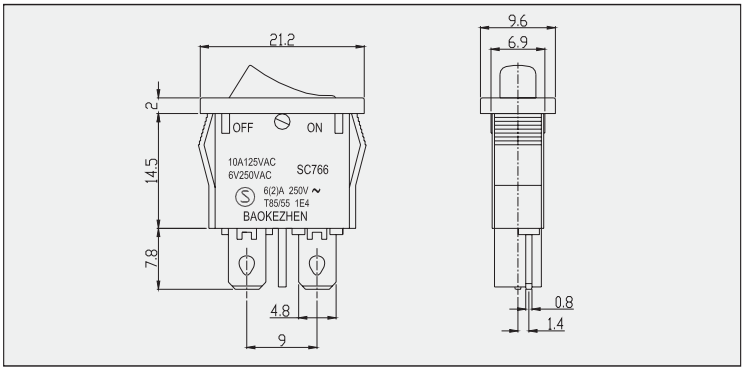

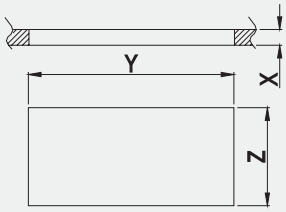

Single pole

APPLIANCE CUT-OUT

X	Y	Z
0.75~1.25	$19.7^{+0}_{-0.1}$	$7.2^{+0.1}_{-0}$
1.25~2	$19.9^{+0}_{-0.1}$	$7.2^{+0.1}_{-0}$
2~3	$20.2^{+0}_{-0.1}$	$7.2^{+0.1}_{-0}$

◆ 产品型号:

SC766 — 1 V A T - 0 0 G

Series, Function, Actuator, Housing, Terminal, Actuator Color, Housing Color, Marking

◆PRODUCT ADVANTAGE

- Excellent actuation characteristic
- Excellent beryllium bronze support enough contact force and ensure mechanical life
- Appearance is novelty、unique
- Usually use in reading lamp、coffee maker、stirrer,ets

◆TECHNICAL SPECIFICATIONS

Electrical rating	6(2)A 250VAC T85/55 1E4 10A 125VAC 6A 250VAC
Electrical life	1E4
Mechanical life	5E4
Contact resistance	≤20mΩ
Insulation resistance	＞100MΩ
High voltage resistance	1500VAC
Resistance to tracking	PTI 175
Contact gap DT with centre-OFF	<3mm
Protection type	IP20
Ambient temperature	0℃...+85℃
Flammability	UL94V-0
Heat and fire resistance	850℃
Material of housing and actuator	PA
Material of Contacts	Ag or AgCdO
Material of Terminals	Copper Alloy
Temperature rise at the terminals (According to electrical life endurance)	Max.30K (UL1054) Max.55K (EN61058-1)
Approval marks	
Suitable for appliances of protection class Ⅱ	

Function(1)

Function	Circuitry	Code
ON-OFF		1

Actuator Marking(2)

Versions	Code	Versions	Code
O I	G	ON OFF	R
O –	P		

Terminals(3)

Terminals	Versions	Code
Quick-connect terminal 4.8X0.8mm		T

Examples of Common Part Numbers and Descriptions

Part Number	Circuitry	Switch Function	Terminal Type	Actuator/Housing Color	Marking
SC766-1VAT-00G		ON-OFF	Quick-connect terminal 4.8X0.8mm	Black/Black	O –