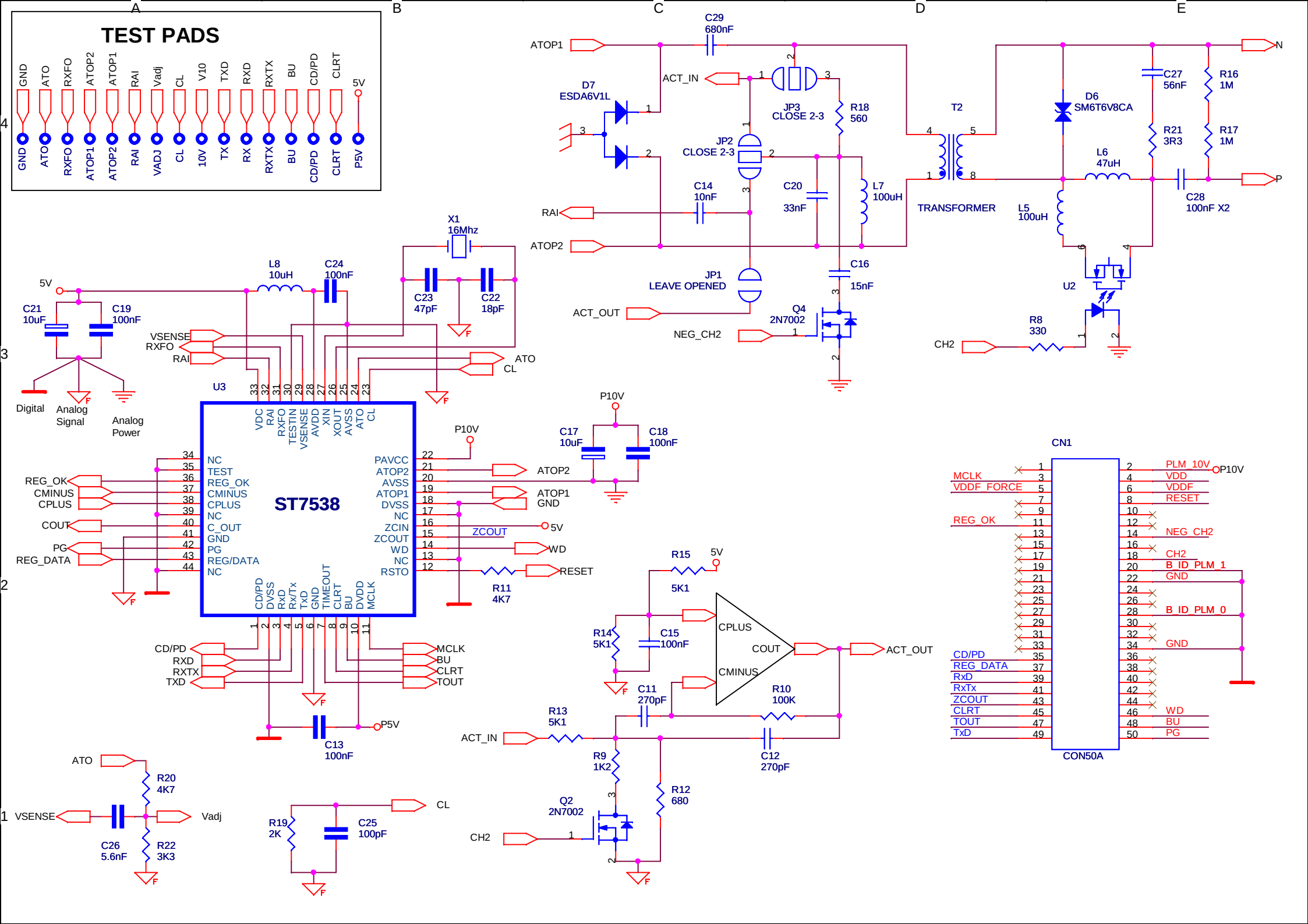
TEST PADS
GND ATO RXFO ATOP2 ATOP1 RAI Vadj CL V10 TXD RXD RXTX BU CD/PD CLRT 5V
GND ATO RXFO ATOP1 ATOP2 RAI VADJ CL 10V TX RX RXTX BU CD/PD CLRT P5V
ATOP1
C29 680nF
ACT_IN
D7 ESDA6V1L
JP3 CLOSE 2-3
R18 560
JP2 CLOSE 2-3
C14 10nF
C20 33nF
L7 100uH
RAI
ATOP2
JP1 LEAVE OPENED
C16 15nF
ACT_OUT
Q4 2N7002
NEG_CH2
T2
TRANSFORMER
D6 SM6T6V8CA
C27 56nF
R16 1M
R21 3R3
R17 1M
L6 47uH
L5 100uH
C28 100nF X2
N
P
U2
R8 330
CH2
X1 16Mhz
L8 10uH
C24 100nF
C23 47pF
C22 18pF
5V
C21 10uF
C19 100nF
VSENSE
RXFO
RAI
ATO
CL
Digital
Analog Signal
Analog Power
U3
VDC RAI RXFO TESTIN VSENSE AVDD XIN XOUT AVSS ATO CL
ST7538
NC TEST REG_OK CMINUS CPLUS NC C_OUT GND PG REG/DATA NC
PAVCC ATOP2 AVSS ATOP1 DVSS NC ZCIN ZCOUT WD NC RSTO
CD/PD DVSS RxD RxTx TxD GND TIMEOUT CLRT BU DVDD MCLK
REG_OK
CMINUS
CPLUS
COUT
PG
REG_DATA
P10V
C17 10uF
C18 100nF
ATOP2
ATOP1
GND
ZCOUT
5V
WD
RESET
R11 4K7
CD/PD
RXD
RXTX
TXD
MCLK
BU
CLRT
TOUT
C13 100nF
P5V
R15 5K1
R14 5K1
C15 100nF
CPLUS
COUT
CMINUS
ACT_OUT
C11 270pF
R10 100K
R13 5K1
ACT_IN
R9 1K2
C12 270pF
R12 680
Q2 2N7002
CH2
CN1
MCLK
VDDF_FORCE
REG_OK
CD/PD
REG_DATA
RxD
RxTx
ZCOUT
CLRT
TOUT
TxD
PLM_10V
VDD
VDDF
RESET
NEG_CH2
CH2
B_ID_PLM_1
GND
B_ID_PLM_0
GND
WD
BU
PG
CON50A
ATO
R20 4K7
VSENSE
C26 5.6nF
R22 3K3
Vadj
R19 2K
C25 100pF
CL