FILE:	ZB02/

REV	CONTENT	CHK	DATE
V0.0	CONTENT	SK	2014-07-24

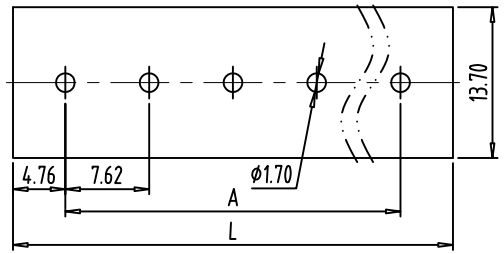

PCB LAYOUT
S=1.5:1

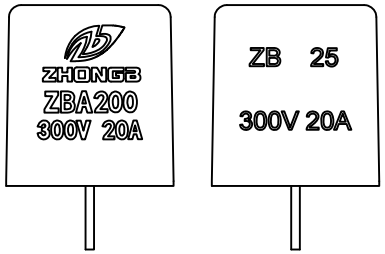

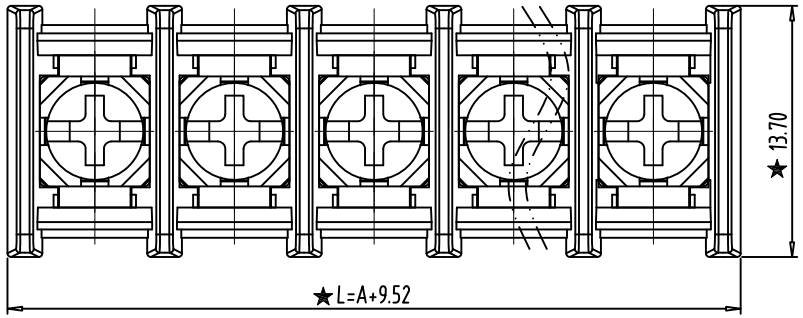

NOTES:

1. Rating:300V 20A;
2. Insulation Withstands Voltage: AC2000V/MIN
3. Insulation Resistance: 500MΩ or more at DC500V
4. Using Temperature Range: -40°C/+105°C
5. Screw Torque Vlaue:0.5N.m
6. Suitable Electric Wire: 14-22AWG
7, "★" the important dimension.

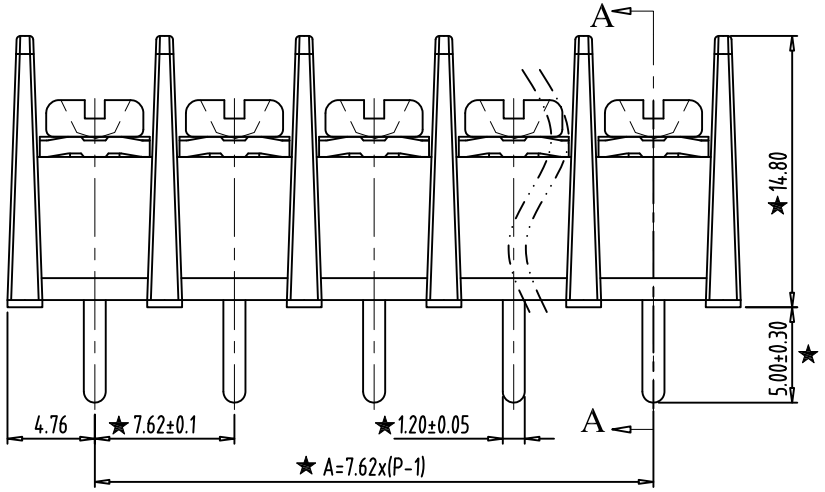

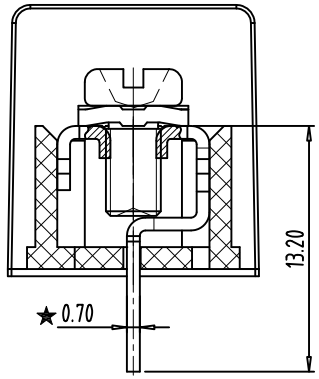

SECTION:A-A

Total Pitch Tolerances in mm									Nominal dimension range in mm									⊥		⌭	—		//
over 0 to 30	over 30 to 53	over 53 to 70	over 70 to 90	over 90 to 115	over 115 to 150	over 150 to 250	over 250 to 350	over 350 to 500	over 0 to 30	over 30 to 53	over 53 to 70	over 70 to 90	over 90 to 115	over 115 to 150	over 150 to 200	over 200 to 250	over 250 to 320	over 0 to 10	over 10	all	over 0 to 100	over 100 to 150	over 150
±0.18	±0.20	±0.25	±0.3	±0.35	±0.44	±0.60	±0.70	±0.85	±0.20	±0.25	±0.30	±0.35	±0.44	±0.55	±0.70	±0.80	±0.90	0.2	0.3	0.3	0.2	0.3	0.5

ITEM	NAME OF PART		NO. OF PART	Q"TY	MATERIAL			NOTE	
DWG.	ZX	DATE	2020.05.15	SIZE	A4	UNITS	mm	SHEET/OF	1 / 1
CHK.		DATE		SCALE	2.5:1			ZB25	
APP.		DATE		NAME	ZBA200-XXP-XC				
ZHONGB NINGBO ZHONGBO PHOTOVOLTAIC TECHNOLGY CO., LTD				DWGNO.	ZB-02-ZBA200XXPXC				